Workshop Manual

911

Carrera 4

Dr. Ing. h.c. F. Porsche Aktiengesellschaft

List of Repair Groups Carrera 4

General	Technical Data	Page 0.1
Repair Groups		Group
Volume I	Maintenance, Self-diagnosis	03
	Engine, Crankcase, Suspension	10
Engine,	Engine, Crankshaft, Pistons	13
Maintenance	Engine, Cylinder Head and Valve Drive	15
	Engine, Lubrication	17
	Engine, Cooling	19
	Fuel Supply	20
	Fuel System, Electronic Injection	24
	Exhaust System/Emission Controls	26
	Starter, Power Supply, Cruise Control	27
	Ignition System	28
	Diagnosis	
Volume II	Clutch, Controls	30
	Clutch	32
Transmission	Manual Transmission, Controls, Case	34
(manual)	Manual Transmission, Gears, Shafts	35
	Differential, Transaxle System, All-Wheel Drive	39
	Diagnosis	
	Clutch, Controls	30
Volume III	Torque Converter	32
	Automatic Transmission, Controls, Case	37
Transmission	Automatic Transmission, Gears, Shafts	38
(automatic)	Differential, Transaxle System	39
	Diagnosis	
Volume IV	Front Wheel Suspension	40
	Rear Wheel Suspension, Axle Shaft	42
Chassis	Wheels, Tires, Alignment	44
	Antiblock System	45
	Brakes, Mechanical	46
	Brakes, Hydraulics, Regulator, Booster	47
	Steering	48
	Diagnosis	
Volume VI	Body-Front Section	50
	Body-Center Section	51
Body	Body-Rear Section	53
	Lids	55
	Doors	57
	Electric Sunroof	60
	Hardtop	61
	Bumpers	63
	Glasses, Window Control	64
	Exterior Equipment	66
	Interior Equipment	68
	Seats	72
	Seat Covers	74
Volume VI	Heater	80
	Ventilation	85
Heating, Ventilation,	Air Conditioner	87
Air Condition	Diagnosis	
Electrics	Instruments, Fuel Gauge, Alarm System	90
	Radio, Telephone, On-board-computer	91
	Windshield Wipers and Washer	92
	Exterior Lights, Lamps, Switches	94
	Interior Lights	96
	Diagnosis	
Volume VII	Wiring	97
Electrics		
Wiring Diagrams		

Printed in Germany, 1988

Survey of Information Published in Technical Manual beginning in 1985

6 Cyl. 3

	TI/ QI		No.	911 C2/C4	911		911 Turbo	Remarks, Model, Also refer to...	Date
1985									
– Drive Shaft seal and Guide Tube	T		1/85		●			New seal	25.03.85
– Manual Transmission / Shift	Q		1/85		●			1985 Model/reverse gear	06.09.85
– Manual Transmission /Shift Seizure	Q		2/85		●			5th gear	06.09.85
1986									
– Transmission Shift Shift Rod Clatter	Q	♦	1/86		●			1987 Model/...QI 1/87	30.12.86
1987									
– Transmission/Shift Mechanism Rattling Shift Rods	Q		1/87		●			Seal	22.05.87
– Manual Transmission "Gear Jumper"	Q		2/87		●			1987 Model/4th gear ...QI-1/88	18.06.87
– Hydraulic Clutch Release Fork	Q		3/87		●			1987 Model/noise	17.07.87
– Transmission Shifting Shift Rod Rattling	Q	⊕	1/87		●			Supporting strut	16.10.87
– Hydraulic Clutch Release Fork	Q	⊕	3/87		●			Pedal assy/adjustment	24.11.87
– Manual Transmission Drive Pinion	Q		4/87		●			1987 Model/thrust washer 2.8 mm	24.11.87
– Manual Transmission Shifting Problems	Q		5/87				●	Reverse gear operating lever	30.12.87
– Transmission Shifts Shift Rods Rattling	Q	♦	1/87		●			Rubber ring	30.12.87
1988									
– Manual Transmission "Gear Jumping"	Q		1/88		●			1st and 2nd gears	19.02.88
– Shift Lever Shift Noise	Q		2/88		●			Lubricating shift base	19.02.88
– Manual Transmission "Transmission Noise"	Q		3/88		●			Engine carrier/console	19.02.88
– RHD Models/Pedals	Q		4/88		●			5 mm Diameter Pin	30.05.88
– Manual Transmission Selector Rod Seal	Q	♦	5/88		●			New Seal	22.07.88
– Clutch Operation	Q		6/88		●		●	Olista Longtime 3 EP	22.07.88

♦ = Conversion instructions or workshop campaign
∇ = Brochure
⊕ = Supplement or change for TI/QI

SERVICE

Date 30.04.90 VKQPI

Copyright by Dr. Ing. h. c. F. Porsche Aktiengesellschaft

Survey of Information Published in Technical Manual beginning in 1985

6 Cyl. 3

	TI/ QI		No.	911 C2-C4	911		911 turbo	Remarks, Model, Also refer to...	Date
– RHD Cars Clutch Hose	Q		7/88		●			Spiral shaped line RHD	30.12.88
1989									
– Optimized Clutch Slave Cylinder	T		1/89	●			●	Clutch actuated hydraulically.	03.03.89
– Modified Multi-plate Package for Transverse Lock	T		2/89				●	Model 959	15.06.89
– New Transmission Carrier (Noise Uncoupled)	T		3/89	●				1987 (H) to 1989 (K)-Model	31.08.89
– Modified Release Lever Bearing	T		4/89	●				1987 (H) to 1989 (K)-Model	31.08.89
– Manual Transmission/2nd Gear/Loose Gear with Needle Roller Assemby	T		5/89	●				Loose whed with coloured dot marking.	21.11.89
1990									
– Porsche Tiptronic drive system	T	∇	1/90	●				WKD 496 920	22.02.90
– "Clutch does not disengage sufficiently"	T		2/90	●				Bleeding hydraulic-system. Testing pedal travel	24.09.90
– Assessing the Clutch and Double Mass Flywheel	T		3/90	●				from M'90 (L)	11.12.90

♦ = Conversion instructions or workshop campaign
∇ = Brochure
⊕ = Supplement or change for TI/QI

SERVICE

Date
30.04.90 | 31.12.90
VKQPI

Copyright by Dr. Ing. h. c. F. Porsche Aktiengesellschaft

The workshop manual of the Carrera 4 also includes that for the Carrera 2.
The Carrera 4 acts as the basis for description of the repairs in the manual.
“Carrera 4" also appears on every page in the header line.

Deviating descriptions for repairs on the Carrera 2 follow those of the Carrera 4. These repair descriptions for both models are separated by a yellow sheet.
“Carrera 2" appears on all pages in the header line after the separating sheet. The page number starts with 200 as an additional distinction.

Page

General data

General data . . . . . 30 - 01
Tightening torque for manual transmission G 64 . . . . . 30 - 09
Tightening torque for front axle transmission Z 64 . . . . . 30 - 011

Clutch, controls

Dismantling and assembling the clutch controls . . . . . 30 - 1
Checking clutch drive plate for wear . . . . . 30 - 5
Removing and installing release bearing . . . . . 30 - 6
Identification of clutch pressure plates . . . . . 30 - 8a
Adjusting the clutch pedal . . . . . 30 - 9

Manual transmission, controls, case

Dismantling and assembling the gearbox . . . . . 34 - 1
Dismantling and assembling manual transmission (modifications from 1991 model on) . 34 - 8a
Dismantling and assembling interaxle lock with Valeo inner discs . . . . . 34 - 8c
Removing and installing the sealing ring for the drive shaft . . . . . 34 - 18
Dismantling and assembling the clamp plate . . . . . 34 - 21
Dismantling and assembling the distributor housing . . . . . 34 - 25
Dismantling and assembling the transfer box housing (from 1991 model on) . . . . . 34 - 28a
Dismantling and assembling the intermediate housing . . . . . 34 - 29
Dismantling and assembling the gear housing . . . . . 34 - 33
Dismantling and assembling the transmission case . . . . . 34 - 37
Adjusting the gearshift assembly . . . . . 34 - 43

Manual transmission, gears, shafts

Partially dismantling the gear set . . . . . 35 - 1
Dismantling and assembling the drive shaft . . . . . 35 - 5
Dismantling and assembling the driving shaft . . . . . 35 - 19
Determining the adjusting disk “s” for the hollow shaft . . . . . 35 - 25

Printed in Germany - XXII, 1995

Final drive, differential

Removing and installing the regulated limited-slip differential . . . . . 39 - 1
Removing and installing contr. limited-slip differential (from 1991 model on) . . . . . 39 - 4a
Dismantling and assembling the regulated limited-slip differential . . . . . 39 - 5
Dismantling and assembling limited slip differential with Valeo friction linings . . . . . 39 - 12a
Adjusting the drive set (rear axle drive) . . . . . 39 - 13
Removing and installing the front axle transmission . . . . . 39 - 25
Removing and installing the center tube . . . . . 39 - 28
Dismantling and assembling the front axle transmission . . . . . 39 - 31
Dismantling and assembling the differential (front axle drive) . . . . . 39 - 37
Adjusting the drive set (front axle drive) . . . . . 39 - 41
PDAS diagnosis (overview) (Porsche dynamic all-wheel control) . . . . . D 39 - 1

Printed in Germany - XXII, 1995

General data

5-speed manual transmission G 64

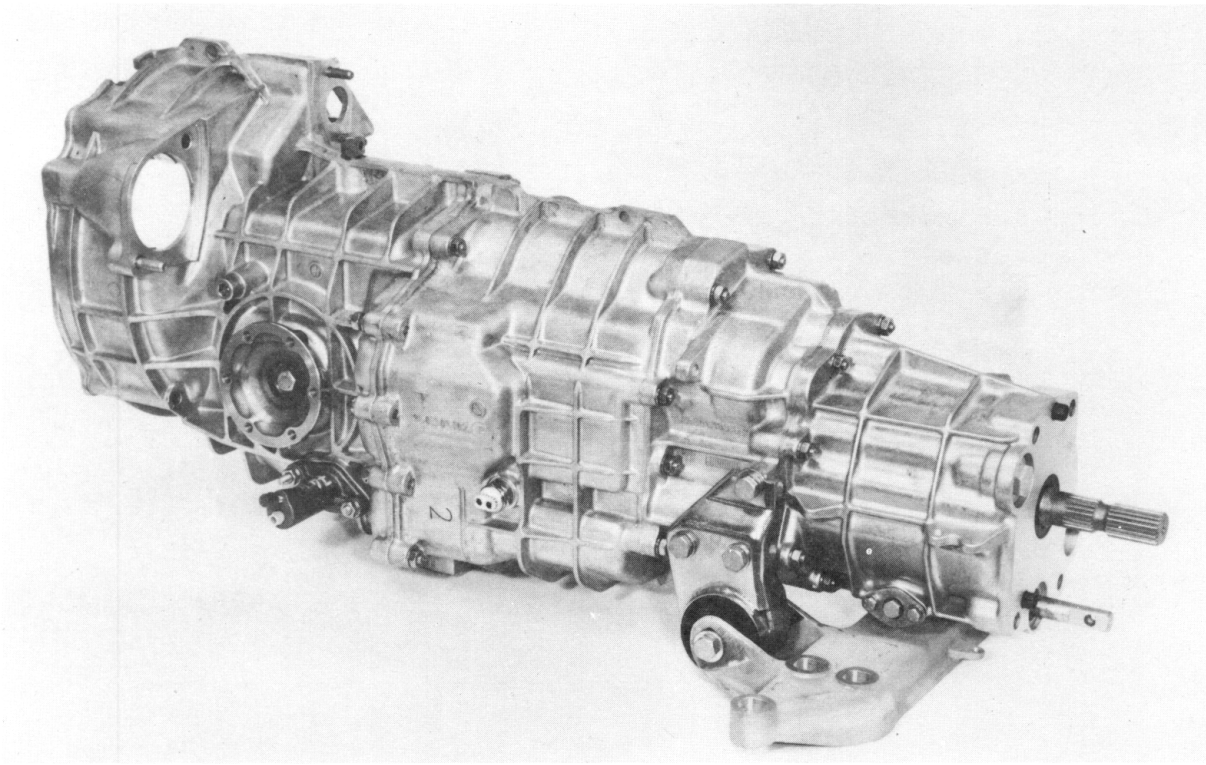

88/487

Model	Code letter	Equipment	Installed in	Model year
G64/00	-	5 speed	911 Carrera 4 worldwide	Model 1989 onward
G64/01	-	5 speed	911 Carrera 4 Switzerland	Model 1989 onward

Printed in Germany – II, 1989

General data

Front axle final drive Z64

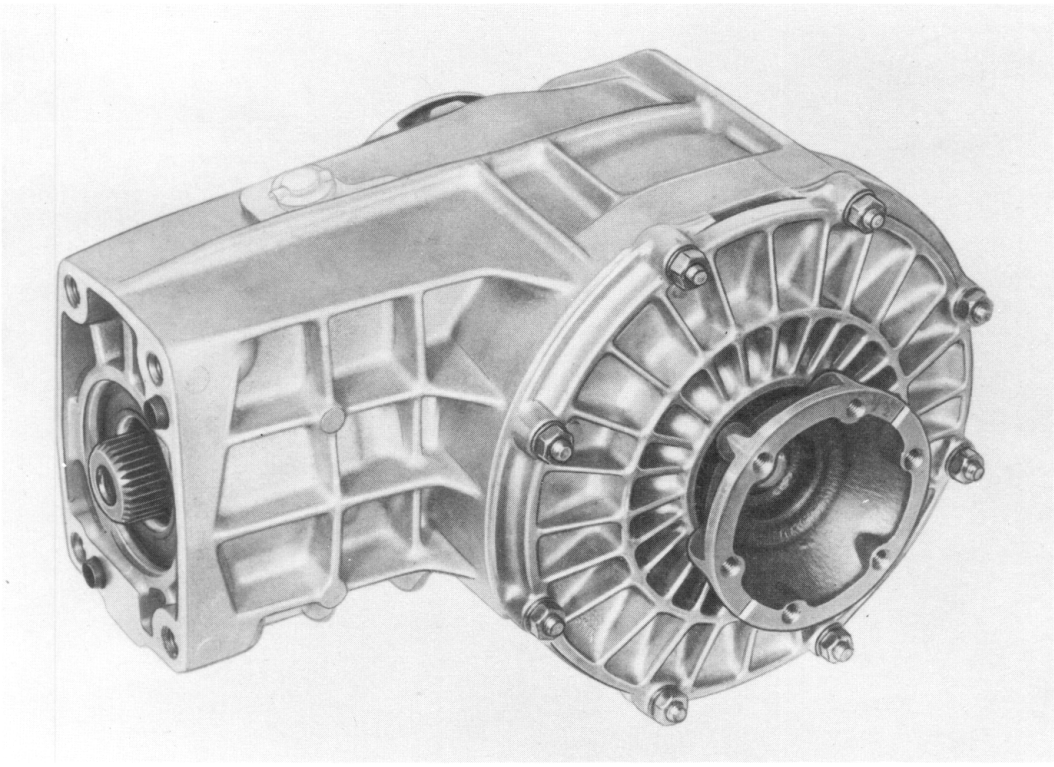

88/379

Model	Code letter	Equipment	Installed in	Model year
Z64/00	-	-	911 Carrera 4 worldwide	Model 1989 onward

General data	Front axle final drive Z64/00
Transmission ratio Final drive ($Z_2 : Z_1 = i$)	31 : 9 = 3.444
Final drive	Hypoid bevel-gear drive with 10 mm offset
Filling capacity	approx. 1.2 liter hypoid oil 75 W 90 of API classification GL 5 (or MIL-L 2105 B)

Printed in Germany – II, 1989

General data

Structure of transmission numbers

Transmission Type	Index for variants within the assembly number	Model Year	Serial number
	1 = normal differential 3 = limited-slip differential	K = 1989 L = 1990 M = 1991	z.B. 00903

Note

The model letter is omitted as of MY '92.

Printed in Germany – XVIII, 1992

General data

General data	Manual transmission G64/00 - G64/01	
Transmission ratios $Z_2:Z_1 = i$	**G64/00**	**G64/01**
1st gear	42:12 = 3.500	41 : 13 = 3.154
2nd gear	36:17 = 2.118	36 : 19 = 1.895
3rd gear	39:27 = 1.444	36 : 27 = 1.333
4th gear	38:35 = 1.086	36 : 35 = 1.029
5th gear	33:38 = 0.868	33 : 38 = 0.868
Rev. gear	40:14 = 2.857	40 : 14 = 2.857
Final drive	Hypoid bevel-gear drive with 16 mm offset	
Transmission ratio Final drive	31:9 = 3.444	31:9 = 3.444
Filling capacity	approx. 3.8 liter hypoid oil SAE 75 W 90 of API classification GL 5 (or MIL-L 2105 B)	

Printed in Germany – II, 1989

Tightening torques for manual transmission G 64

Location	Thread	Tightening torque Nm (ft.lb)
Oil drain plug and oil filler plug	M 22 x 1.5	30 (22)
Hexagon nut for gear and transmission cases, side transmission cover, transfer case, intermediate case, tensioning plate	M 8	23 (17)
Clamp plate to transfer case	M 6	10 (7.5)
Lock nut / driver carrier	M 24 x 1.5	240 (177)
Lock nut / bearing carrier	M 42 x 1.25	300 (221.5)
Hexagon head screw / shift fork	M 8	23 (17)
Collar nut / input shaft	M 14 x 1.5	140 (103)
Reversing-light switch to gearbox	M 18 x 1.5	35 (26)
Guide tube to transmission case	M 6	10 (7.5)
Shift gate to tensioning plate	M 6	10 (7.5)
Mating bearing screw / engaging forks (interaxle lock)	M 30 x 1.5	80 (50)
Collar screw / reverse idler gear II	M 8	35 (26) (and Loctite 270)
Bleeder in transmission case	M 14 x 1.5	35 (26)
Mating bearing screw / engaging fork (rear-axle lock)	M 12 x 1.5	65 (48)
Collar nut / input shaft	M 30 x 1.5	250 (184.5)
Lock nut / drive pinion	M 40 x 1.25	240 (177)
Hexagon head screw / halfshaft flange	M 10	44 (32.5)

Printed in Germany – III, 1989

Location	Thread	Tightening torque Nm (ft.lb.)
Tension spring / tachometer sensor	M 6	10 (7.5)
Crown wheel to differential housing (hex bolt with tab washer)	M 12 x 1.25	150 (112)
Crown wheel to differential housing (Verbus-Ripp bolt **without** tab washer)	M 12 x 1,25	200 (147)
Cover on differential housing	M 6	15 (11)

Printed in Germany – XVIII, 1992

Tightening torques for front axle final drive Z 64

Location	Thread	Tightening torque Nm (ft.lb.)
Oil drain plug and oil filler plug	M 22 x 1.5	30 (22)
Hexagon head screw / joint flange	M 10	44 (32.5)
Side transmission cover to housing	M 8	23 (17)
Lock screw / lock nut	M 5	6 (4.5)
Lock nut / drive pinion	M 33 x 1.5	230 (170)
Crown wheel to differential housing (hex bolt with tab washer)	M 12 x 1.25	150 (111)
Crown wheel to differential housing (Verbus-Ripp bolt **without** tab washer)	M 12 x 1,25	200 (147)

Printed in Germany – XVIII, 1992

Clutch control, disassembling and assembling

Printed in Germany – 1988

Clutch control, disassembling and assembling

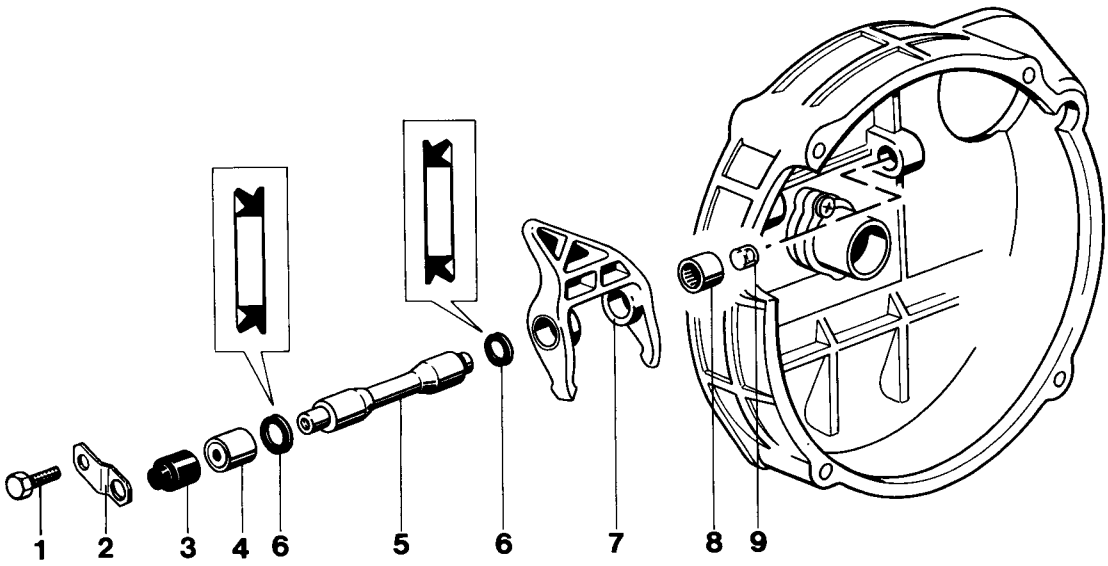

155/30

Printed in Germany – 1988

No.	Description	Qty.	Note when: Removing	Installing
1	Hexagon head screw M6 x 16	1		
2	Holder	1		
3	Bearing cover	1		Pack with grease (Use Olista Longtime 3 EP)
4	Needle bearing with assembly hole	1		Install in correct position, assembly hole points outwards
5	Release lever shaft	1	Pull out with hexagon head screw M6 x 40	
6	Sealing ring	2		Check, replace if necessary, install in correct position
7	Release lever	1		
8	Needle bearing without assembly hole	1		
9	Plastic sleeve	1		Install in correct position, closed side points towards the needle bearing, sleeve not required for transmissions with through bore

Note

Lubricate all sliding surfaces of the clutch release mechanism with Olista Longtime 3EP
Part number 000.043.024.00

Printed in Germany – 1988

Checking clutch drive plate for wear

(clutch drive plate removed)

Checking:

Using a depth gage or sliding calipers, measure distance X from surface of lining to rivet head.

Note

Measure only at the beaded-over side of the rivet head.

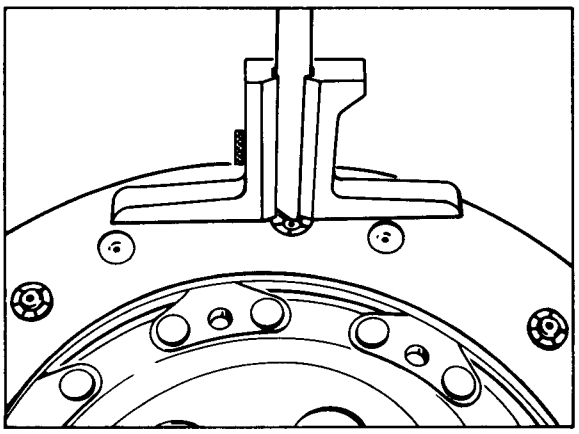

645-30

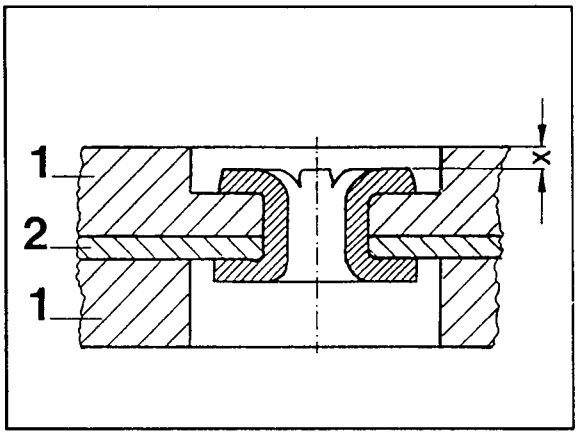

646-30

1 - Lining
2 - Drive plate/lining spring

Wear limit X is **0.3 mm** (see drawing).
When the drive plate is new, this dimension is approx. 1.0 mm.
Note that **lining wear** is **not linear**, i.e. not at a steady rate throughout the clutch's operating life. The way in which the lining material beds down and is compressed initially suggests that greater lining wear is taking place, but as the car is driven further, the rate of wear declines considerably.

Printed in Germany – X, 1990

Removing and installing release bearing

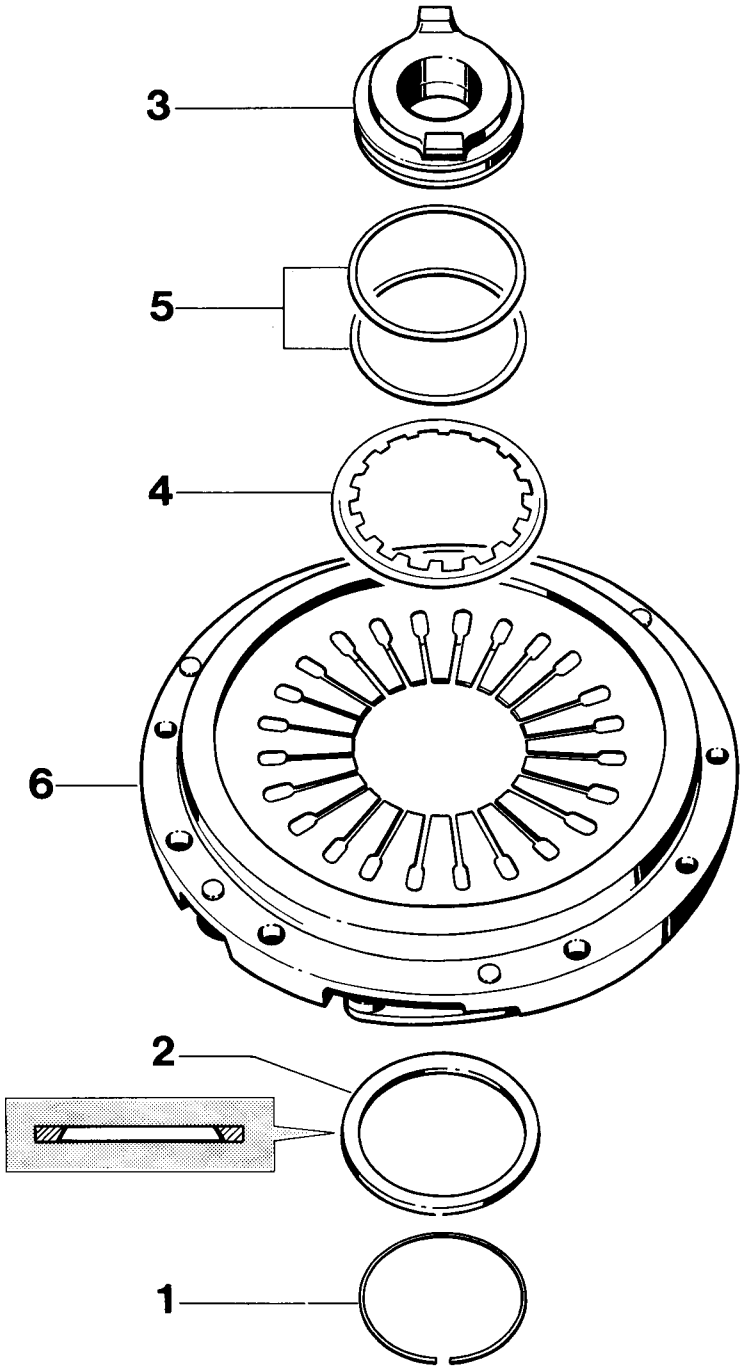

Printed in Germany – XIV, 1991

No.	Designation	Qty.	Note: Removal	Installation
1	Snap ring	1	use pointed pliers to remove, pressing down thrust plate in a press	observe correct seating of snap ring
2	Thrust washer	1		groove must face snap ring
3	Release bearing	1	check, do not wash out, just wipe with a dry cloth	
4	Spring washer	1	install in correct position	
5	Spacer	2		**always insert 2 spacers (1 spacer for 911 turbo)**
6	Thrust plate	1		check for wear, replace if required

Printed in Germany – XIV, 1991

Assembly notes

1. To fit the snap ring, a shop press is required. Use a wooden block as a pressure piece.

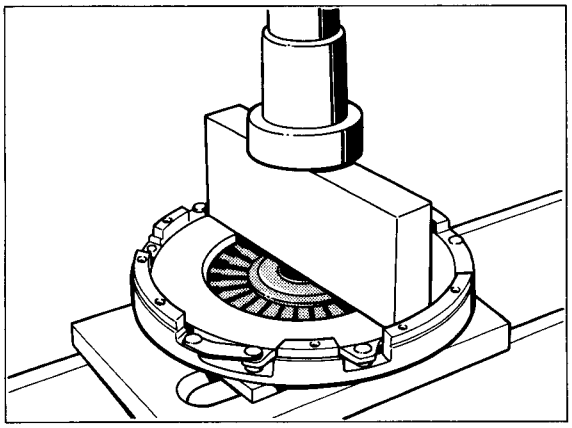

1000-30

2. Install spring washer in correct position.

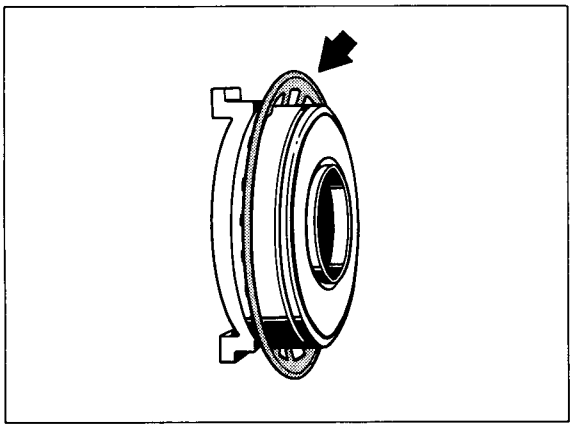

1001-30

Usage of release bearings

1	2
911 Carrera 2/4 911 Turbo 911 RS with double-mass flywheel	911 RS without double-mass flywheel 968

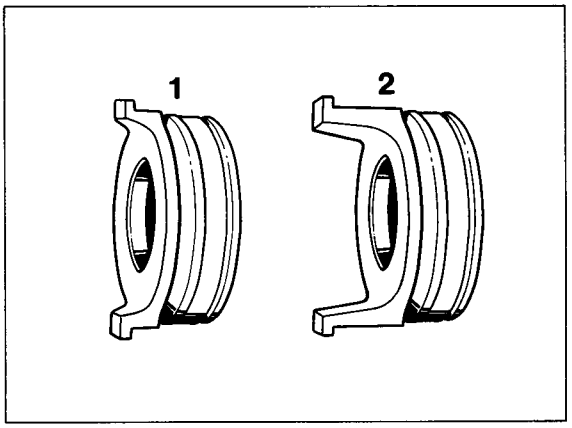

1002-30

Printed in Germany – XIV, 1991

Identification of clutch pressure plates

To avoid confusion, the pressure plates are color-marked for positive identification.

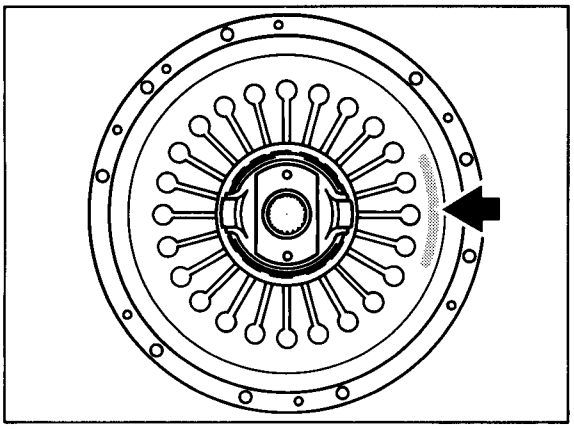

836-30

Color marking:

968	Green
911 Carrera 2/4	Blue
911 Carrera (993)	No mark
911 Turbo 3.6	Red

Printed in Germany – XXI, 1994

Adjusting the clutch pedal

Note

The following items are essential **requirements** for smooth clutch operation and must therefore be observed whenever the pedal is adjusted:

- Correct bleeding of clutch hydraulics.
- Tightness of hydraulic system.
- Correct setting of boost spring.
- Pedal travel limited by correctly set floorboard stop.
- Fitting position of pedals according to standard specification.

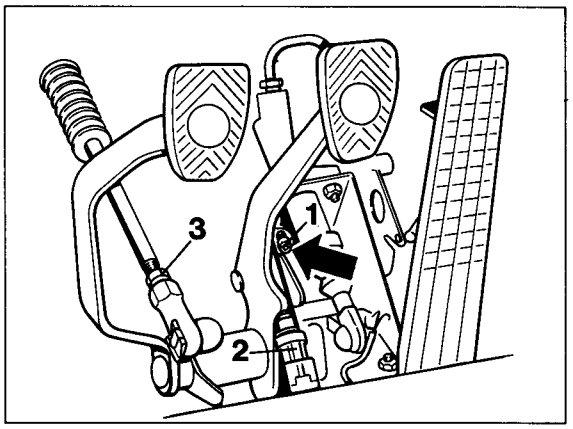

1097-30

Checking and adjustment procedures

1. **Checking the pedal return (return force).**
   With the pedal in home position, pull pedal back with a force of 30 N min. (using a spring balance). The pedal must not yield. If it does (= return force insufficient), the boost spring preload must be reduced or set to a dimension of 6 mm, respectively (refer to item 2.).

2. **Adjusting the boost spring (dimension A = 6 mm).**
   Adjustment is made by rotating the hex socket head bolt (drawing 1097-30/arrow 1). The clearance between screw and pivot must be 6 mm.

3. **Checking the pedal travel (dimension B = 145 mm).**
   When measured in the center of the pedal, the pedal travel must be **145 mm + 10**. If required, adjust or limit the pedal travel at the floorboard stop (refer to drawing 1098-30 on page 30 - 10).

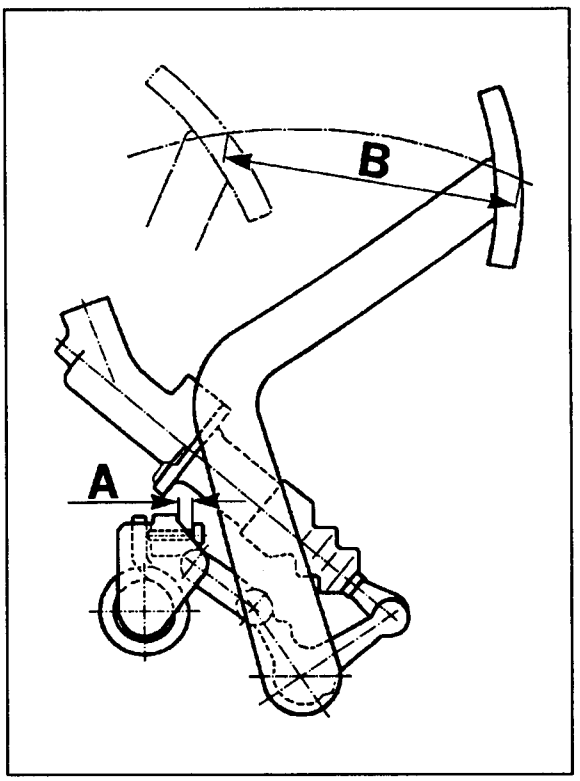

1113-30

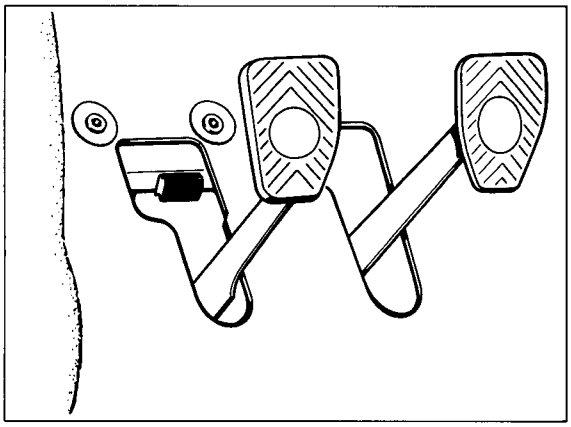

1098-30

4. Clutch free play.

The clutch master cylinder is provided with an internal stop. The boost spring always forces the pushrod and, hence, the clutch pedal against this stop. Due to the fact that any free play is automatically taken up hydraulically, the free play of the clutch cannot be checked at the clutch pedal.

Disassembling and assembling gearbox

Tools

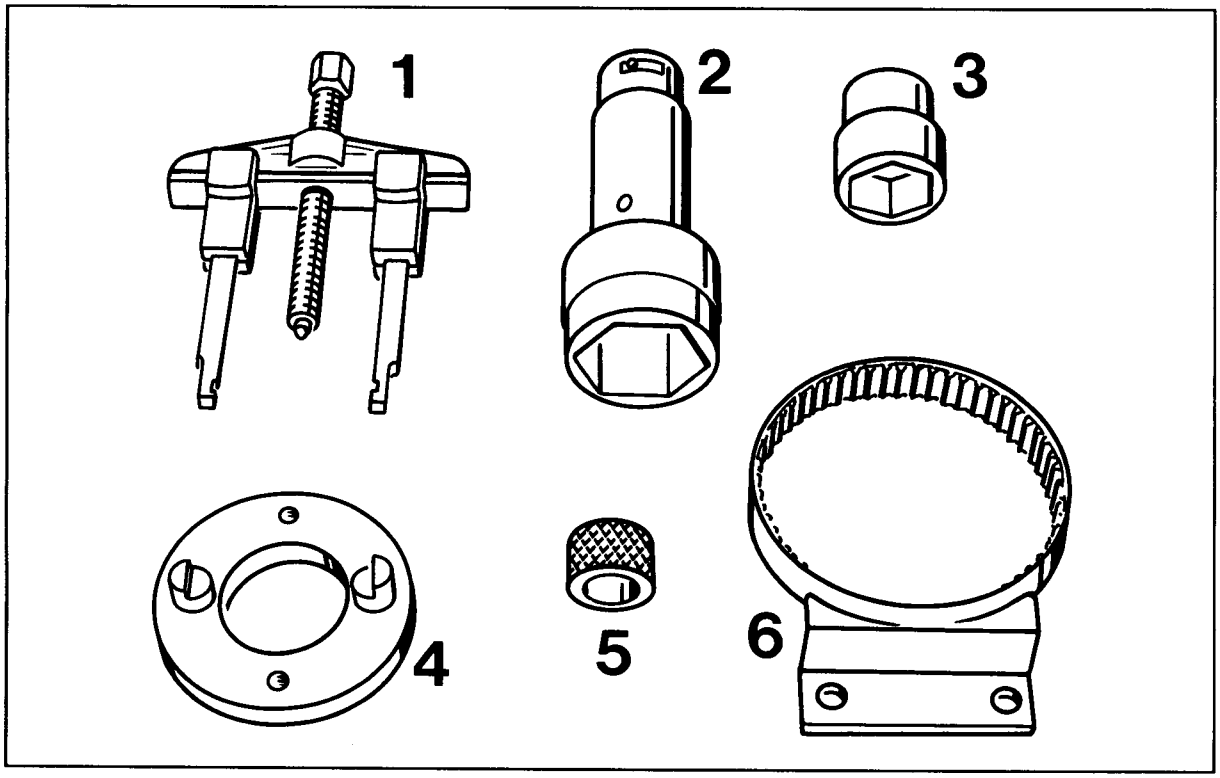

194-34

No.	Description	Special Tool	Order number	Remarks
1	Extraction arms for Kukko puller 20-2	9278	000.721.927.80	
2	Socket wrench	9277	000.721.927.70	
3	Socket wrench	9280	000.721.928.00	
4	Holding device	9275	000.721.927.50	
5	Centering component	9294	000.721.929.40	
6	Holding device	9276	000.721.927.60	

Printed in Germany – II, 1989

Disassembling and assembling gearbox

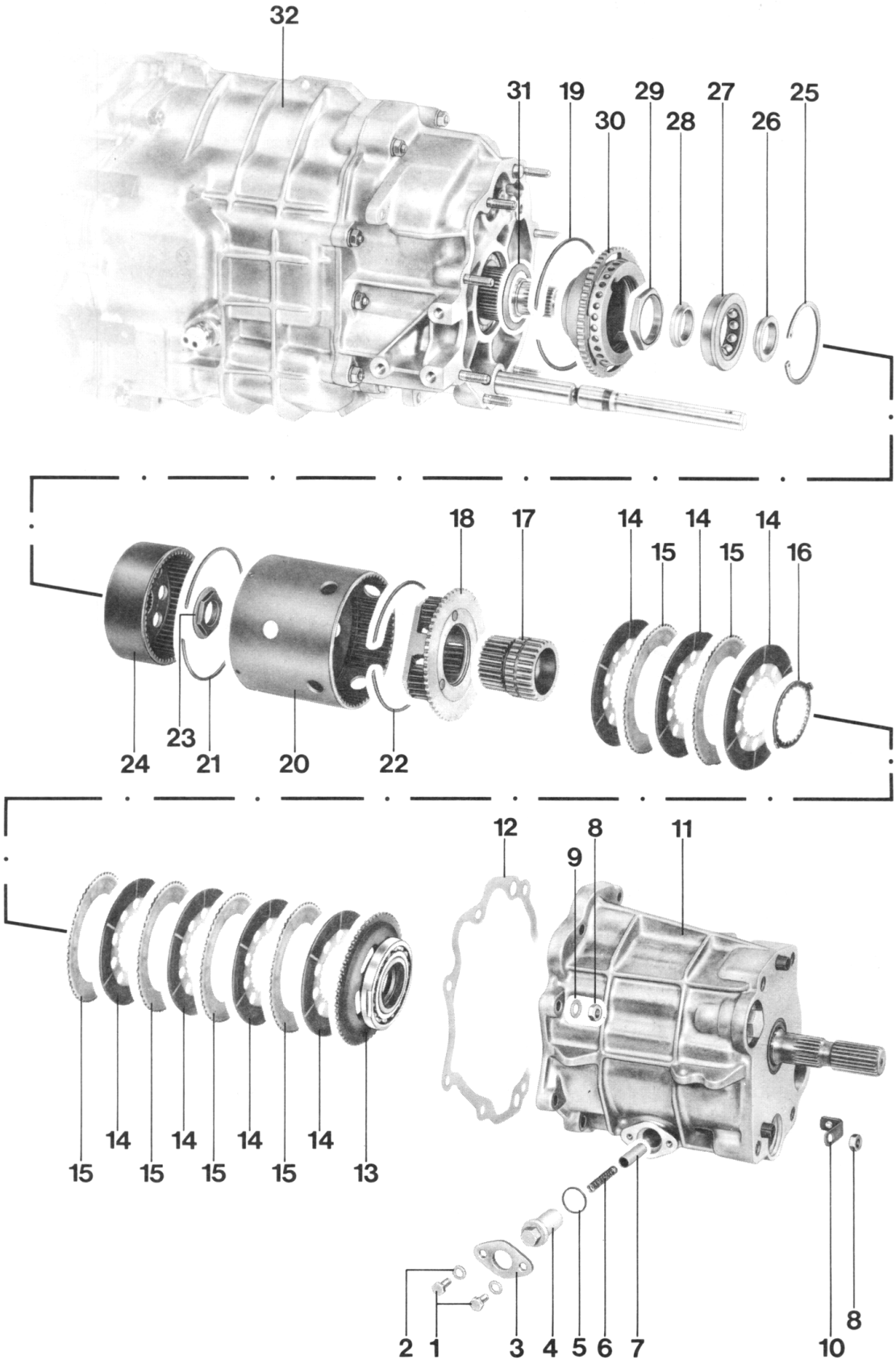

Printed in Germany – II, 1989

No.	Designation	Qty.	Note: Removal	Installation
1	Hex bolt	2		Tighten to 10 Nm (7 ftlb) torque
2	Washer	2		
3	Tensioning plate	1		
4	Eccentric bushing	1		Adjust
5	Sealing ring	1		Renew
6	Coil spring	1		
7	Locking bushing	1		
8	Hex nut	8		Tighten to 23 Nm (17 ftlb) torque
9	Washer	7		
10	Holder	1		
11	Transfer box	1		
12	Gasket	1		Renew
13	Press. plate with bearing	1		
14	Inner plate*	7		Oil lightly, install in correct position
15	Outer plate (1.3 mm thick)*	6		Oil lightly
16	Circlip	1		Install in correct position between 3rd and 4th inner plates
17	Sun wheel	1		
18	Planet wheel carrier	1		
19	Snap ring	1	Remove through assembly holes in clutch sleeve	
20	Clutch sleeve	1		
21	Snap ring	1		
22	Snap ring	1		

* From 1991 model on, determine thickness of plate cluster and adjust counter-bearing screw (see Page 34-8a).

Printed in Germany – X, 1990

No.	Description	Qty.	Note when: Removing	Installing
23	Lock nut	1	Remove using Special Tools 9275, 9276 and 9280	Tighten with 240 Nm (177 ft.lb.), notch collar to secure
24	Driving carrier with hollow gear	1		
25	Circlip	X	Make a note of the thickness for refitting	Determine thickness again if necessary. Select the thickest possible ring which may be used
26	Inner bearing race	1	Remove using Special Tools 9294 and 9278	Heat up to approx. 120 °C (248 °F)
27	Four-point bearing	1		
28	Inner bearing race	1	Undo lock nut and pull out using suitable two-claw puller	Heat up to approx. 120 °C (248 °F)
29	Lock nut	1	Remove using Special Tools 9276 and 9277	Tighten with 300 Nm (221 ft.lb.), notch collar to secure
30	Bearing carrier	1		
31	Shim "S"	X	Make a note of the thickness for refitting	Determine again if necessary (refer to Page 35 - 25)
32	Transmission	1		

Printed in Germany – II, 1989

Notes on disassembly and assembly

Disassembly

1. Remove snap ring (No. 19) through the assembly holes in the clutch sleeve with a suitable tool.

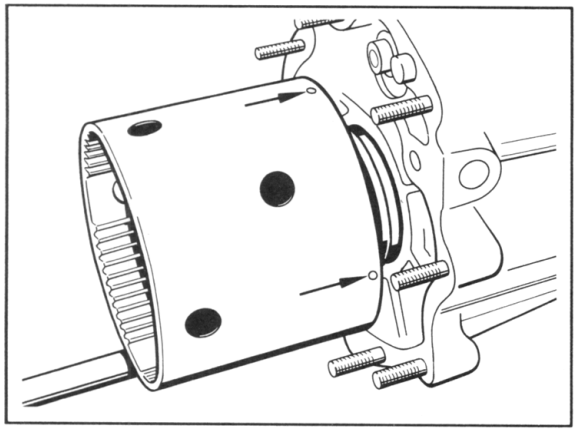

180 - 34

2. Remove collar nut (No. 23) with Special Tools 9275, 9276 and 9280.

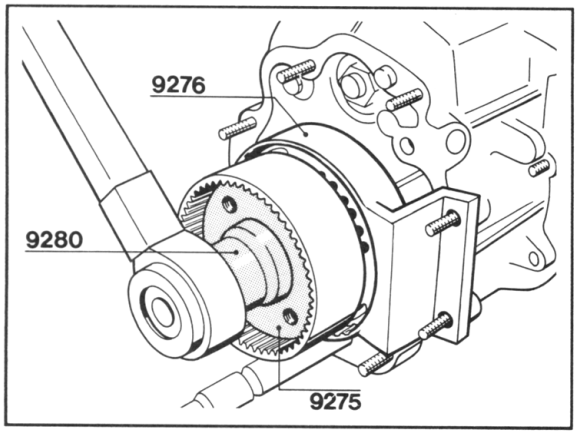

178 - 34

3. Remove inner bearing race (No. 26) with Special Tools 9278 and 9294.

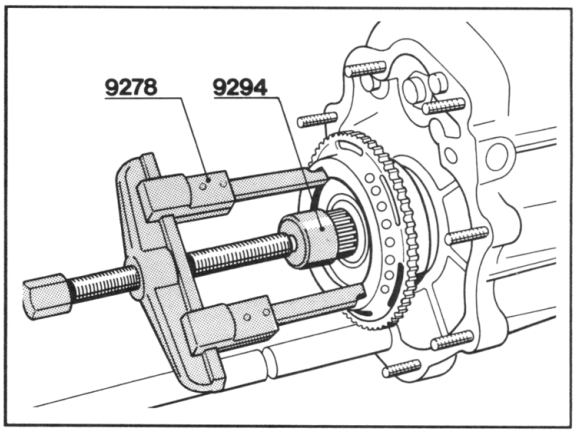

181 - 34

4. Remove lock nut (No. 29) with Special Tools 9276 and 9277.

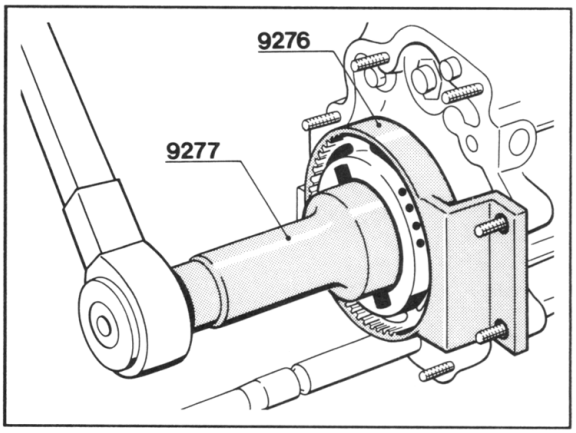

176-34

Printed in Germany – II, 1989

5. Pull out inner bearing race (No. 28) over the bearing carrier with Special Tool 9294 and a suitable puller.

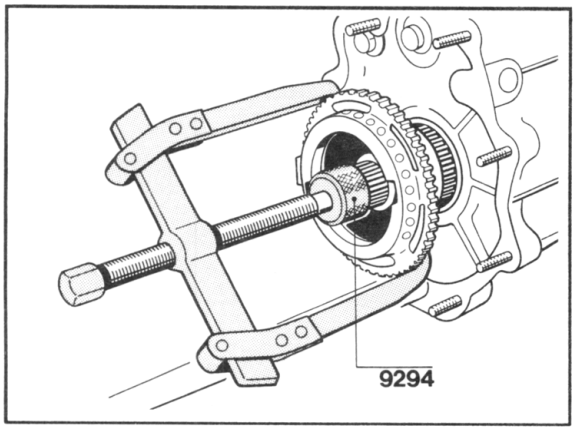

182 - 34

Note

Counternut (No. 29) must be unscrewed beforehand.

Assembly

1. Apply a film of transmission oil to inner plates and assemble so that the spiral groove for the oil supply runs counterclockwise from inside to outside when looking at the clutch sleeve (direction of assembly) (refer to the simplified sketch). Apart from this, the oil holes in the carrier plate must be in line with one another. Assembly is easier if a tooth is missing from the carrier plate.

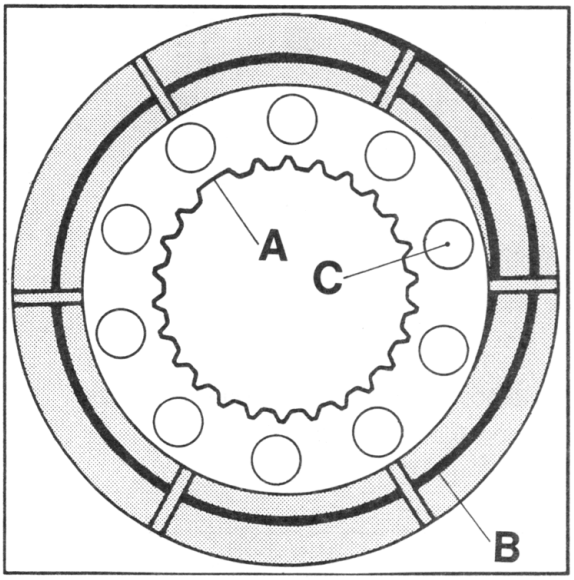

207 - 34

A = Missing tooth
B = Spiral groove
C = Oil hole

2. Insert tab washer (A) between 3rd and 4th inner plate so that the lugs (B) project through two oil holes in the carrier plate.

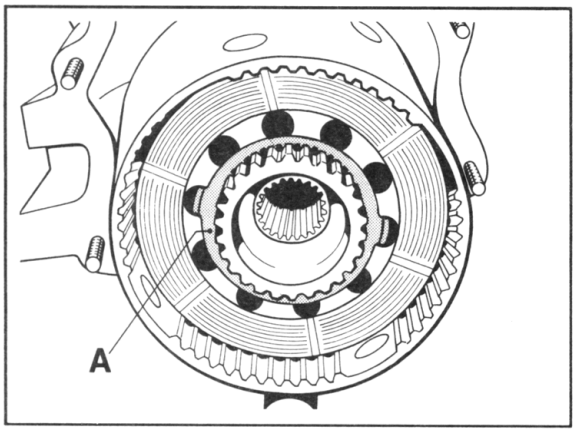

177 - 34

A = Tab washer

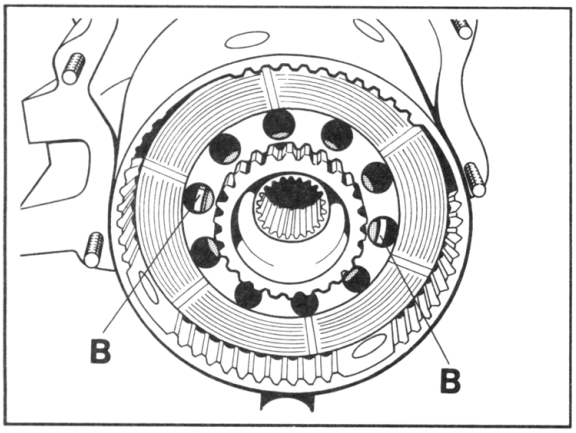

179 - 34

B = Lugs of tab washer

3. Insert pressure plate (No. 13) into transfer case in correct position (recesses on bearing must latch into the driving journals of the engaging fork).

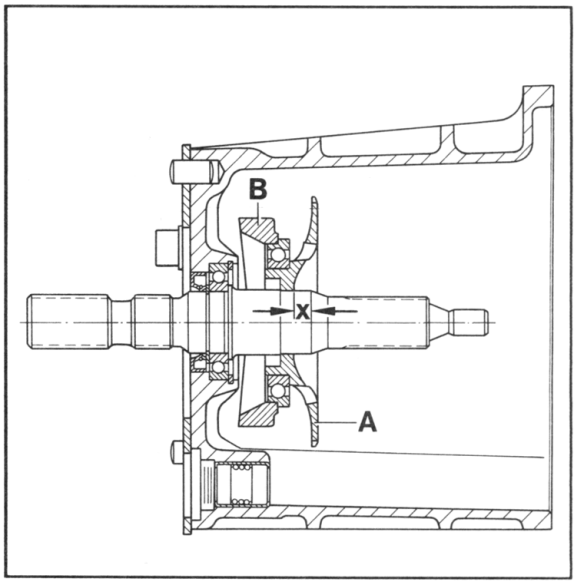

208 - 34

A = Pressure plate
B = Engaging fork
X = approx. 8 mm

Note

The pressure plate is in the correct position if dimension "X" is approx. 8 mm.

4. Mount transfer case and pressure plate carefully. Turn input shaft so that the teeth on the pressure plate engage with the teeth of the clutch sleeve.

Printed in Germany – II, 1989

Note

The transfer case is in the correct position if it can be slid up completely **by hand**.
If there is a gap of approx. 6 mm between transfer case and intermediate housing, the teeth of the pressure plate have not engaged into those of the coupling sleeve.

5. Adjust the inner shift rod with eccentric bush (No. 4) in such a way that it is possible to preselect all gears without resistance. For this, undo hexagon head screws holding the tensioning plate and turn the eccentric bush.

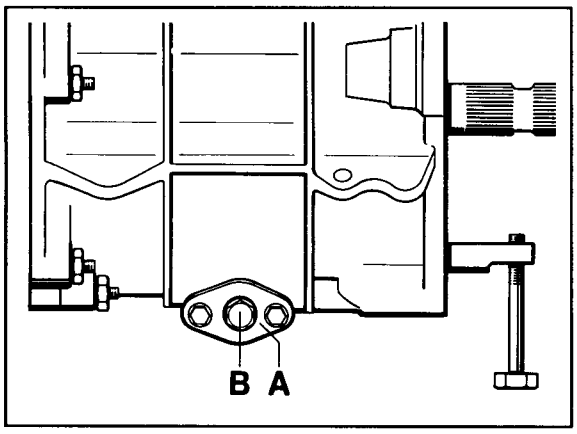

209 - 34

A = Tensioning plate
B = Eccentric bush

6. Change through all gears by way of a check. For this, fit long M 8 screws into the inner shift rod.

Printed in Germany – II, 1989

Modifications from 1991 model on

Note

Before dismantling the transmission always check the amount of wear on the front-rear locking plates (see Vol. IV, Page D39/45-21). If plates are re-used after having been operated for a period, the bearing pin of the counter-bearing bolt must remain in the same position as before. If it has to be reset or if the counter-bearing bolt has to be removed (for instance to rectify a leak), the correct position for re-installing must first be determined.

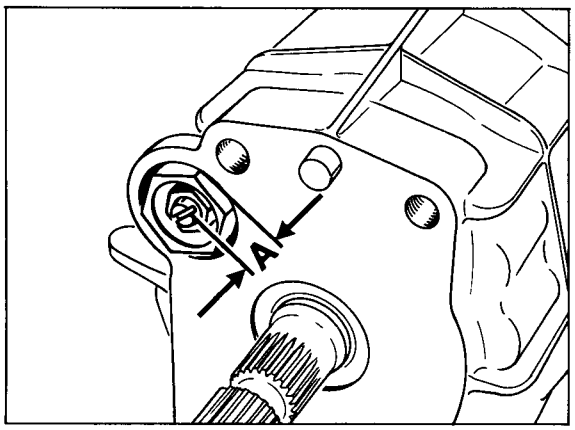

587-34

A = Installed position

Determining thickness of plate cluster (with Gylon discs)

If the plates for the front-rear lock are renewed, the plate cluster thickness must be determined.

Adjustment value (new)	= 26 - 0.2 mm
Wear limit	= 23 mm

Note

If the wear limit is reached, replace all inner discs.

Measure entire disc pack.

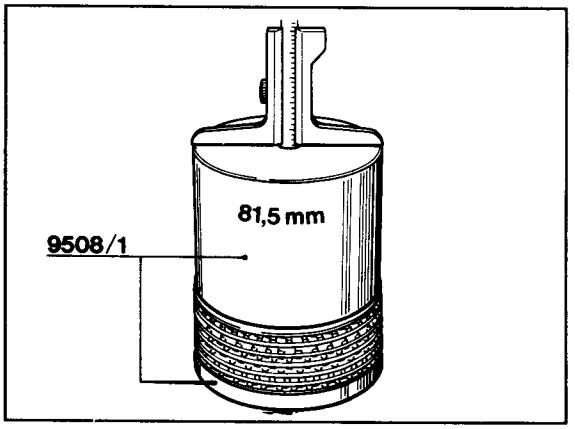

184-39

Example I

Measured value	106.90 mm
Height of special tool*	– 81.50 mm
Plate cluster thickness	25.40 mm

* Marked on tool

Adjustment value	26.00 mm
Plate cluster thickness	– 25.40 mm
Adjusting plate	0.60 mm

Printed in Germany – XX, 1993

Example II

Measured value	106.00 mm
Height of special tool*	– 81.50 mm
Plate cluster thickness	24.50 mm

* Marked on tool

Adjustment value	26.00 mm
Plate cluster thickness	– 24.50 mm
Adjusting plate	1.50 mm

Note

Do not install any outer adjusting plates thinner than 1.3 mm.
In Example I, one of the six 1.3 mm thick outer plates must be increased in thickness by 0.6 mm (to 1.9 mm).
In Example II, an additional outer plate 1.5 mm thick must be inserted between the inner plate and the pressure plate.

Adjusting counter-bearing for front-rear lock

Note

Adjustment is possible only with the measuring cylinder (special tool 9514), and is only necessary if the plates are renewed.

1. The flexible gaiter for the slave cylinder must be installed.

2. Slacken off the measuring cylinder adjusting screw as far as possible (to make it easier to install the measuring cylinder).

3. Attach the measuring cylinder to the transmission.

4. Use the adjusting screw to set the measuring cylinder to 29.5 mm (in the front-rear differential lock measuring range).
   LS = Front-rear diff. lock measuring range
   QS = Lateral diff. lock measuring range

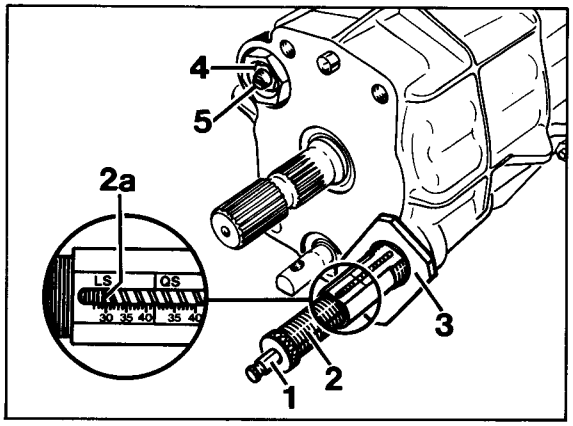

588-34

1 – Spacing plunger
2 – Adjusting screw
2a – Measuring groove on adjusting screw
3 – Special tool 9514/1
4 – Locknut (seal with Loctite 222)
5 – Bearing pin (counter-bearing)

5. Screw in the bearing pin until there is no more endplay at the measuring cylinder spacing plunger. In this position, lock the bearing pin with the hex nut (tightening torque 40 Nm) (30 ftlb).

Modifications to the longitudinal lock

Following introduction of the Valeo inner discs, the number of discs and the stacking of the disc pack have been modified.

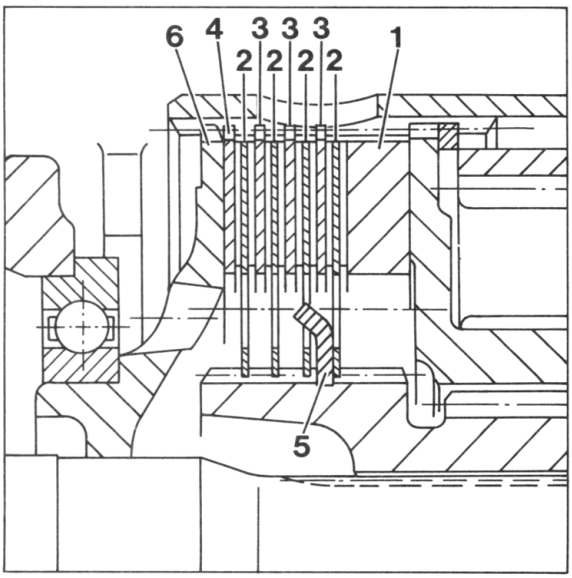

1358-34

1 = Wave disc
2 = Valeo inner disc
3 = Outer disc (1.3 mm thick)
4 = Outer adjusting disc
5 = Snap ring
6 = Thrust plate

Note

Due to the fact that supply of the Gylon inner discs will be stopped in the foreseeable future, the longitudinal lock must be fitted with Valeo friction discs if repairs are required. To do so, replace all friction discs as well as the wave disc and adjust the pack thickness to the specified dimension (26 mm). Combining Gylon and Valeo inner discs is not permissible.

Determining disc pack thickness (with Valeo inner discs)

Note

Due to the transition from Gylon to Valeo inner discs, the stacking of the disc pack has been modified.

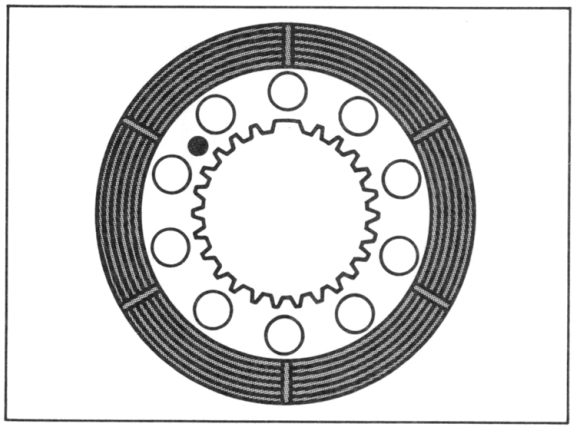

288-39

Former Gylon disc

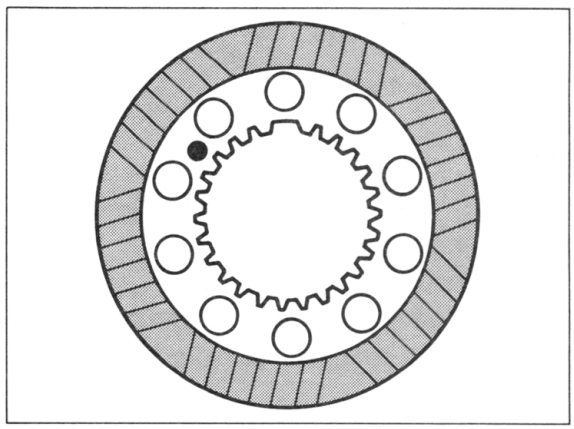

1311-39

New Valeo disc

Printed in Germany – XX, 1993

1. Determine thickness of disc pack.

– Pack thickness (new) = 26.0 – 0.2 mm
  Wear limit = 25.2 mm

– Measure entire disc pack with wave disc.

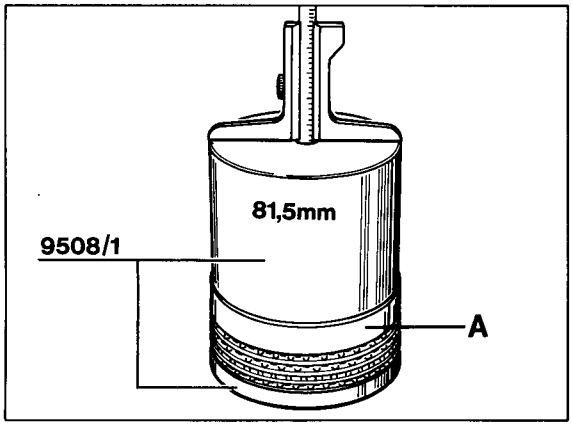

1361-34

A = Wave disc

Example

Measurement	106.60 mm
Special Tool height*	– 81.50 mm
Pack thickness	25.10 mm

* Engraved on tool

Note

If the wear limit has been reached, all inner discs must be replaced.
Adjust to specified pack thickness (26.0 - 0.2 mm) at the thrust plate, using the outer adjusting disc (refer to page 34 - 8c).

2. Apply a thin coat of transmission oil to discs before fitting them.

3. Oil bores in carrier plate of inner discs must line up exactly.

Disassembling and assembling gearbox

Tools

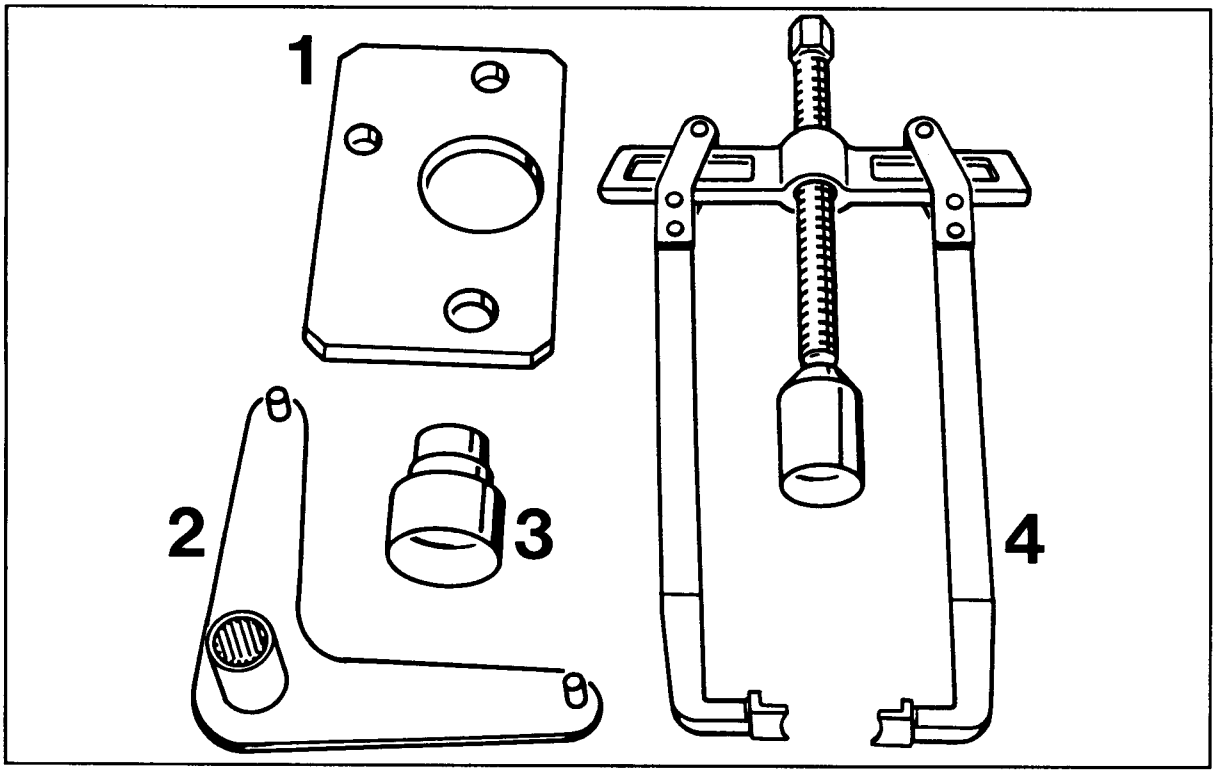

195 - 34

No.	Description	Special Tool	Order number	Remarks
1	Retainer plate	9286	000.721.928.60	
-	Retainer plate	9286/1	000.721.928.61	not illustrated
2	Bracket	9253	000.721.925.30	
3	Assembly bush	9283	000.721.928.30	
4	Puller	9284	000.721.928.40	

Printed in Germany – II, 1989

Disassembling and assembling gearbox

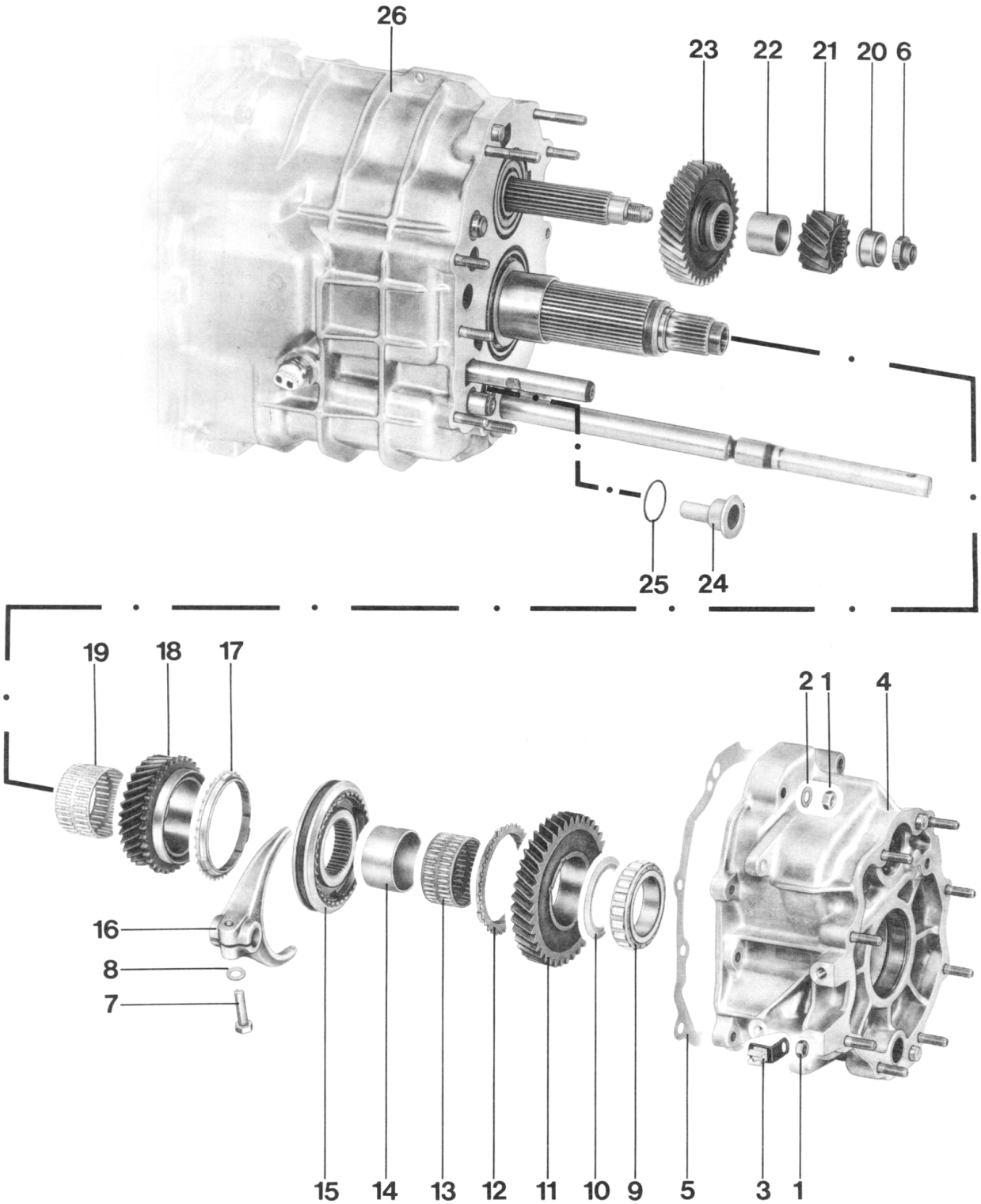

Printed in Germany – II, 1989

No.	Description	Qty.	Note when: Removing	Installing
1	Hexagon nut	10		Tighten with 23 Nm (17 ft.lb.)
2	Washer	9		
3	Holder	1		
4	Intermediate case	1		
5	Seal	1		Replace
6	Collar nut	1	Select 5th gear, block input shaft with Special Tool 9253	Tighten with 140 Nm (103 ft.lb.) (and notch the collar to secure)
7	Hexagon head screw	1		Tighten with 23 Nm (17 ft.lb.)
8	Washer	1		
9	Cylindrical-roller bearing	1	Pull out with Special Tool 9284	Heat up to approx. 120 °C (248 °F)
10	Friction washer	1		Mount in correct position. The large flat-ground side points towards needle bearing (No. 13)
11	Loose gear, reverse gear	1		Only replace in sets
12	Synchronizing disk	1	Mark for refitting	Check for wear, assemble with the same gear wheel. (Cogs towards driver dogs)
13	Needle cage	1	Mark for refitting	Assemble with the same gear wheel
14	Sleeve	1	Mark for refitting	Assemble with the same gear wheel
15	Guide sleeve with gear shift sleeve and synchronizing components	1	Remove together with shift fork	Gear shift sleeve and guide sleeve are matched
16	Shift fork	1	Remove together with gear shift sleeve and guide sleeve	Adjust with Special Tool 9286 and/or 9286/1

Printed in Germany – II, 1989

No.	Description	Qty.	Note when: Removing	Installing
17	Synchronizing disk	1	Mark for refitting	Check for wear, assemble with the same gear wheel (cogs towards driver dogs)
18	Loose gear - 5th gear	1		Only replace in pairs
19	Needle cage	1	Mark for refitting	Assemble with the same gear wheel
20	Inner bearing race	1	Pull out with suitable claw puller	Heat up to approx. 120 °C (248 °F)
21	Fixed gear - reverse gear	1		Only replace in sets
22	Spacer	1		
23	Fixed gear - 5th gear	1		Only replace in pairs
24	Oil guide tube	1		
25	O-ring			Replace
26	Transmission	1		

Printed in Germany – II, 1989

Notes on disassembling and assembling

Disassembling

1. Pull cylindrical-roller bearing and needle-bearing sleeve from the hollow shaft with Special Tool 9284.

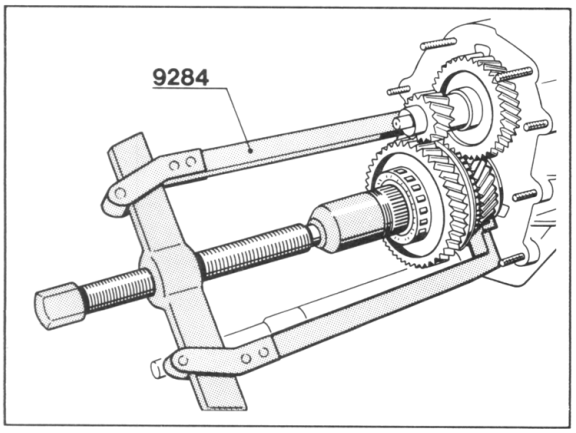

175-34

Note

Always use Special Tool 9284. If the drive pinion is used as a support, this may cause damage to the gear wheels in the transmission.

Assembly

1. Adjust shift fork for 5th and reverse gear:

- Secure hollow shaft with Special Tool 9286 and/or 9286/1.

- Insert shim "s" and counter Special Tool 9285 hand tight.

- Tighten lock nut.

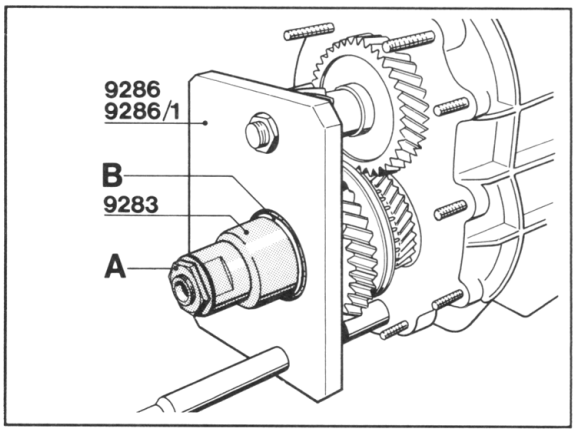

183-34

A = Lock nut
B = Shim "s"

- Adjust gear shift sleeve with the gear fork in such a way that it is exactly centrally located in idle position.

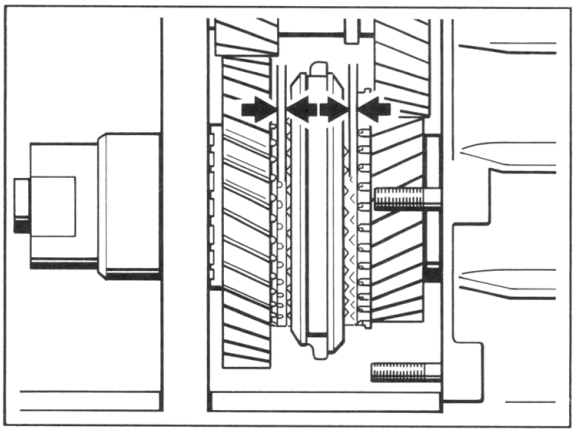

186-34

- Tighten hexagon head screws for shift fork with 23 Nm (17 ft.lb.).

Printed in Germany – II, 1989

Disassembling and assembling gearbox

Tools

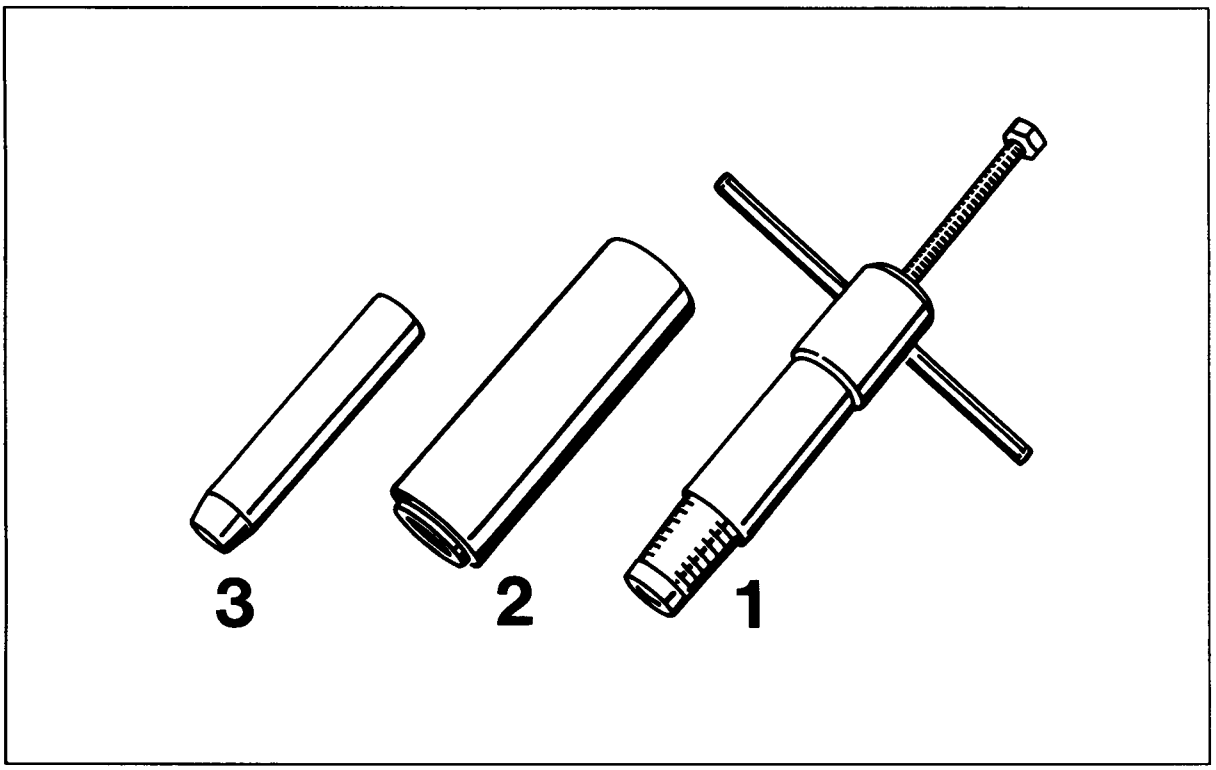

193 - 34

No.	Description	Special Tool	Order Number	Remarks
1	Puller	9251	000.721.925.10	
2	Pressing tool	9256	000.721.925.60	
3	Sleeve	9255	000.721.925.50	

Printed in Germany – III, 1989

Disassembling and assembling gearbox

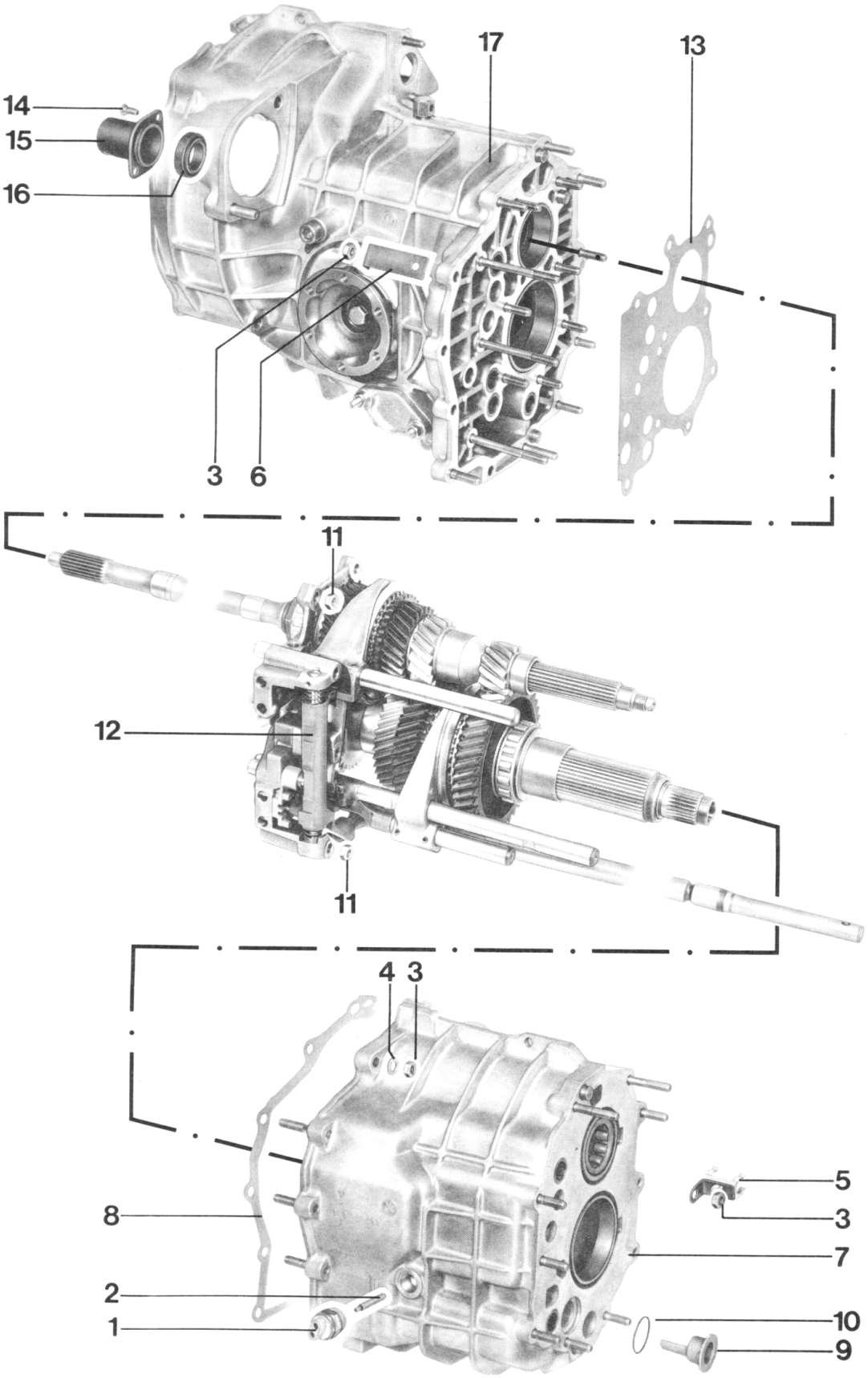

Printed in Germany – III, 1989

No.	Description	Qty.	Note when: Removing	Installing
1	Reversing-light switch	1		Tighten with 35 Nm (26 ft.lb.)
2	Plunger	1		Offset side points towards switch
3	Hexagon nut	12		Tighten with 23 Nm (17 ft.lb.)
4	Washer	10		
5	Holder	1		
6	Holder	1		
7	Gear housing	1		
8	Seal	1		Replace
9	Oil guide pipe	1		Insert in correct position
10	O-ring	1		Replace
11	Hexagon nut	10		Tighten with 23 Nm (17 ft.lb.)
12	Gear set (complete)	1		Insert complete gear set with inner shift rod
13	Shim "S3"	X	Make a note of number and thickness for refitting	Determine again if necessary
14	Oval-head screw	2		Tighten with 10 Nm (7.5 ft.lb.)
15	Guide tube	1		
16	Shaft seal	1	Refer to Page 34 - 18	Only install after assembling the gear set (refer to Page 34 - 18)
17	Transmission case	1		

Printed in Germany – II, 1989

Removing and installing input shaft seal

Removing

1. Remove engine/gearbox assembly and disconnect transmission.

2. Remove release-bearing guide tube.

3. Screw Special Tool 9251 firmly into the seal.

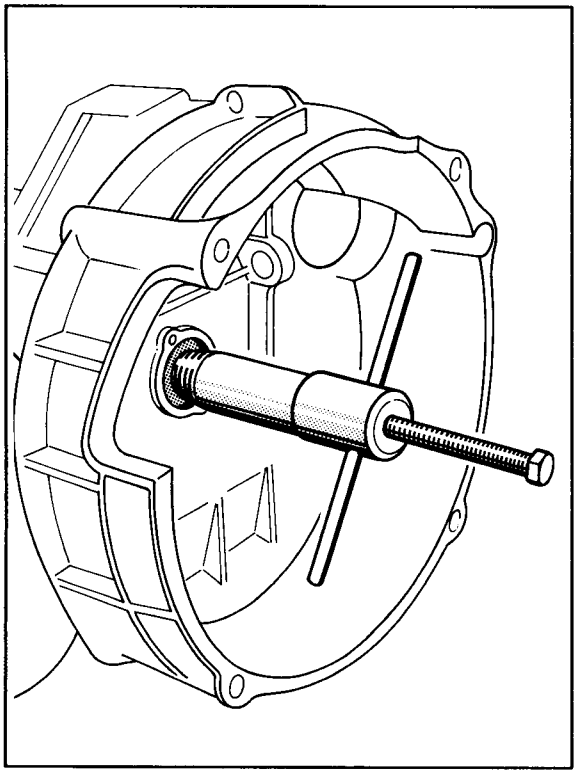

4. Pull out seal by screwing in the hexagon head screw.

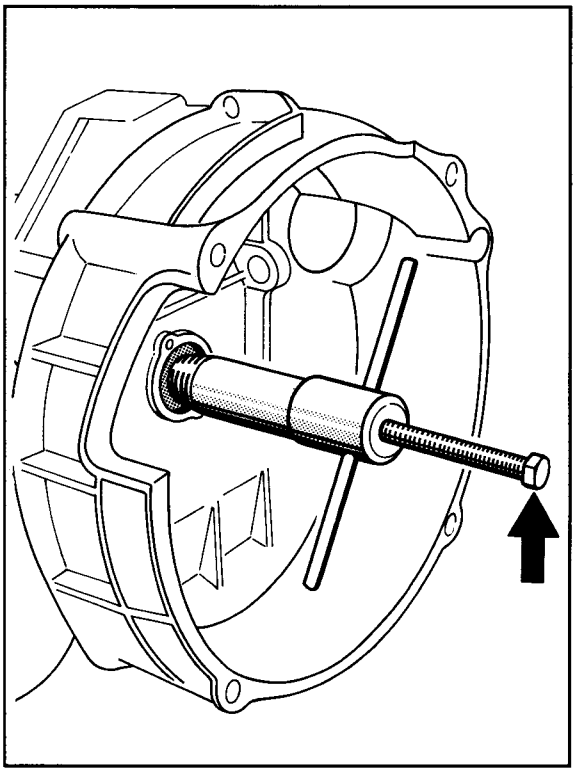

Note

If the helical tension spring jumps out when removing the seal, pull from the input shaft using a wire hook.

Printed in Germany – II, 1989

Installing

1. Slide assembly sleeve 9255 over the input shaft gearing.

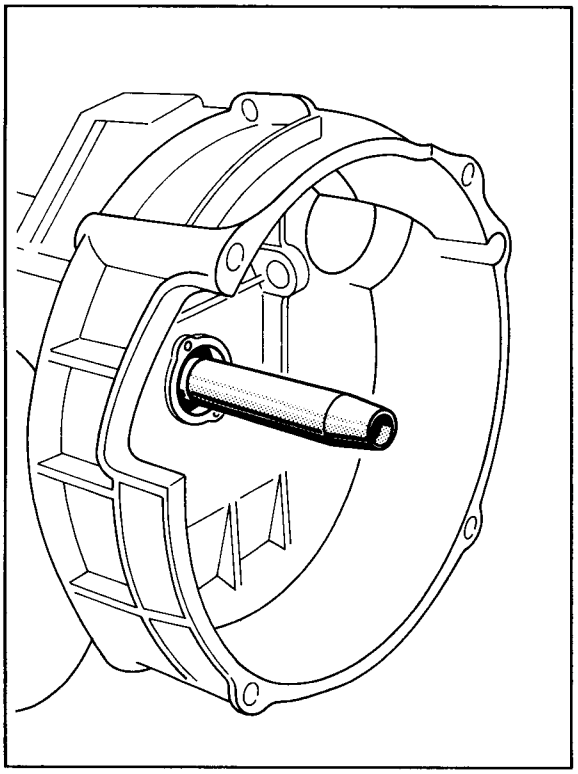

2. Fill the area between sealing lips with grease (e.g. Olista Longtime 3 EP)

3. Drive seal into place with Special Tool 9256.

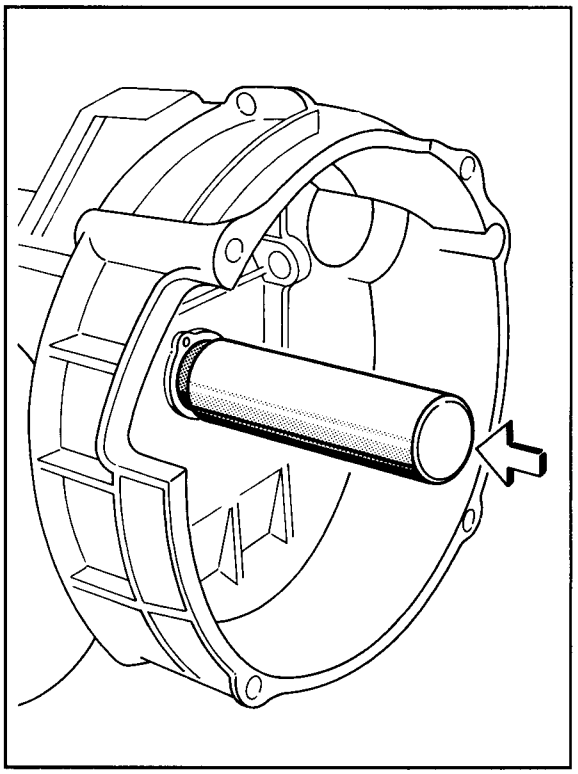

4. Install guide tube and tighten fastening screws with **10 Nm (7.5 ft.lb.)**

Printed in Germany – II, 1989

Disassembling and assembling tensioning plate

Printed in Germany – II, 1989

Disassembling and assembling tensioning plate

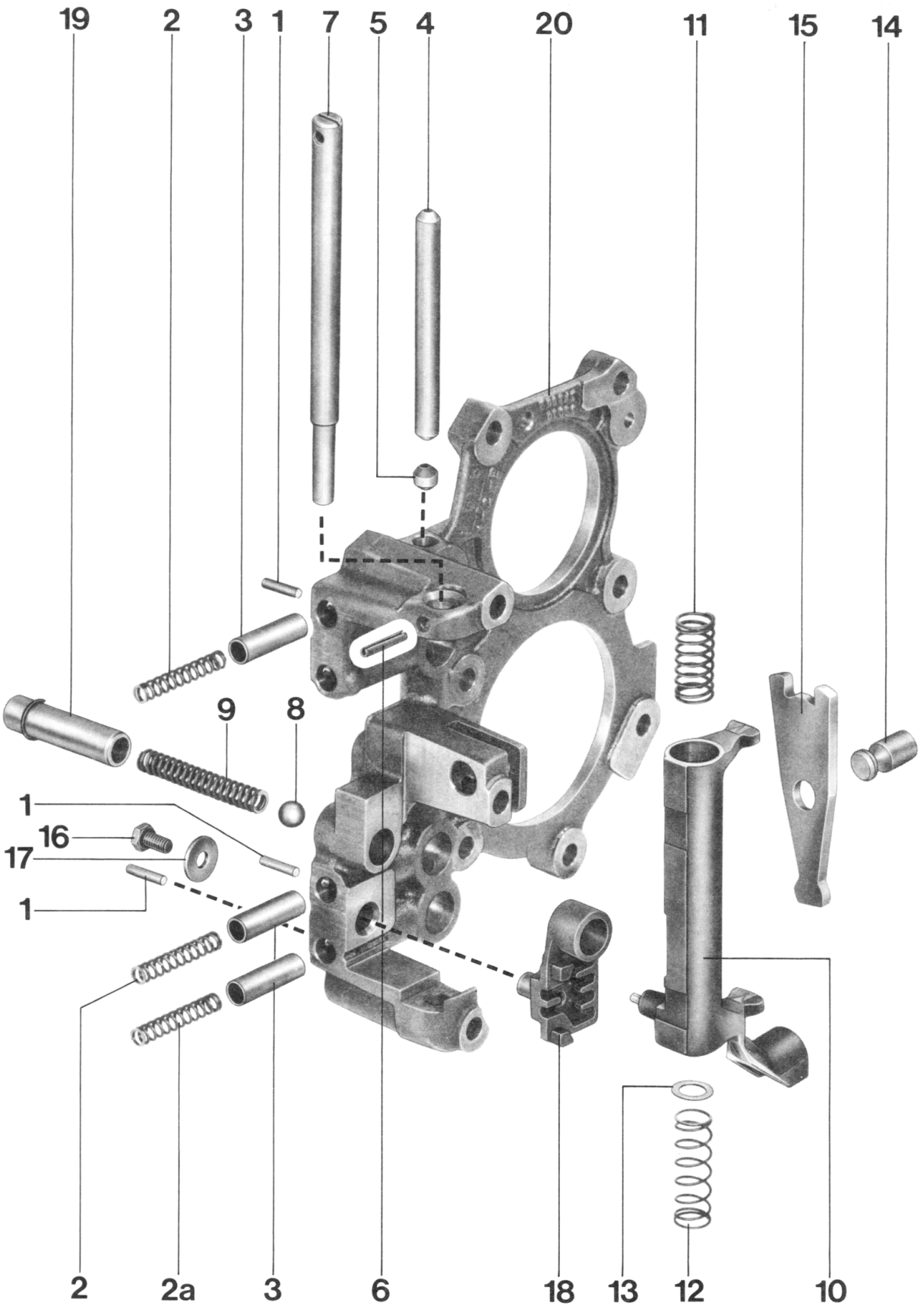

Printed in Germany – II, 1989

No.	Description	Qty.	Note when: Removing	Installing
1	Parallel pin	3	Springs (No. 2) are under tension when shift rods installed	
2	Compression spring	3		
3	Locking bush *	3		
4	Lock*	1		
5	Lock*	1		
6	Dowel pin	1		
7	Pivot shaft	1		Insert in correct position, secure to tensioning plate hole with mandrel dia. 8 mm
8	Ball	1		
9	Compression spring	1		
10	Deflection lever	1		
11	Compression spring**	1	Mark for refitting	Relaxed length = 33.9 + 0.5 mm, wire thickness = 1.6 mm. Do not confuse with spring No. 12
12	Compression spring	1	Mark for refitting	Relaxed length = 55.2 + 0.5 mm, wire thickness = 1.5 mm. Do not confuse with spring No. 11
13	Shim	1		

* Observe installation position of locks

** New spring as of Feb., 1991. Free length 63 + 0,5 mm, wire thickness 1.6 mm

Printed in Germany – XX, 1993

No.	Description	Qty.	Note when: Removing	Installing
14	Bolt	1		Insert in correct position, secure to tensioning plate hole with mandrel Ø 8 mm
15	Deflection lever	1		
16	Hexagon head screw	1		Tighten with 10 Nm (7.5 ft.lb.)
17	Washer	1		
18	Shift gate	1		
19	Adapter sleeve with snap ring	1	Press out with suitable mandrel	Press in to position with suitable mandrel
20	Tensioning plate	1		

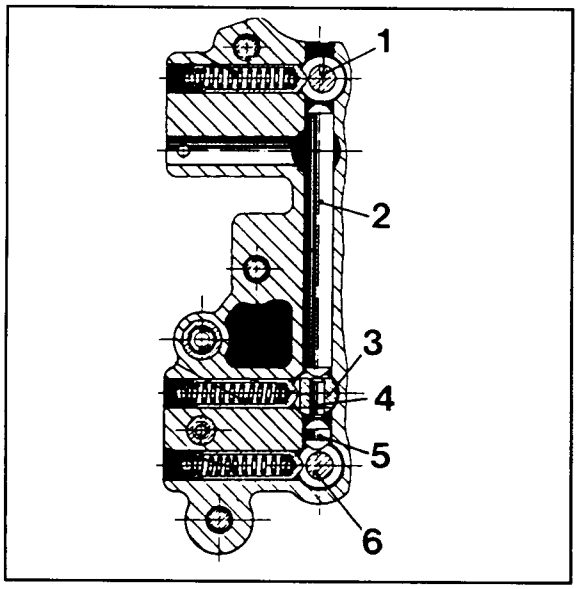

160-35

Transfer case, disassembling and assembling

Tools

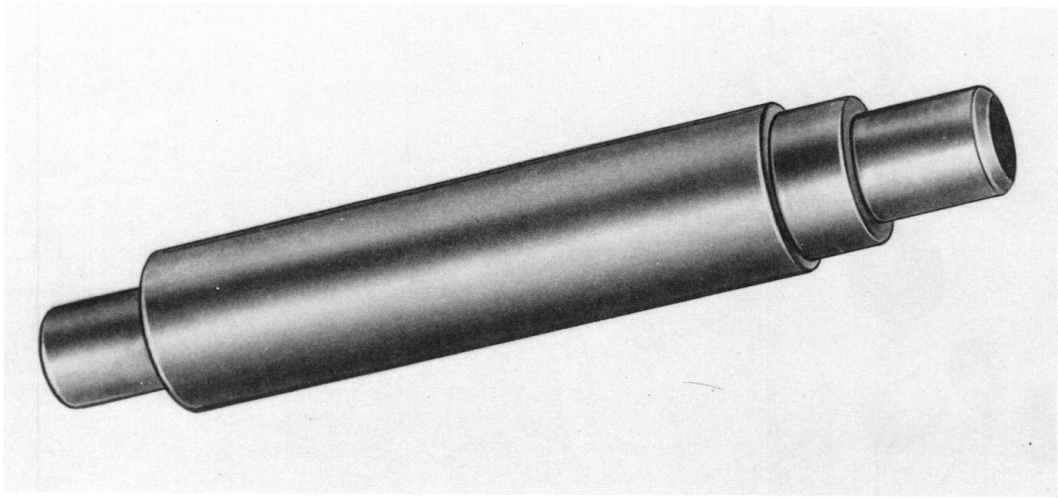

86/856

No.	Description	Special Tool	Order number	Remarks
	Mandrel	9254	000.721.925.40	

Printed in Germany – II, 1989

Transfer case, disassembling and assembling

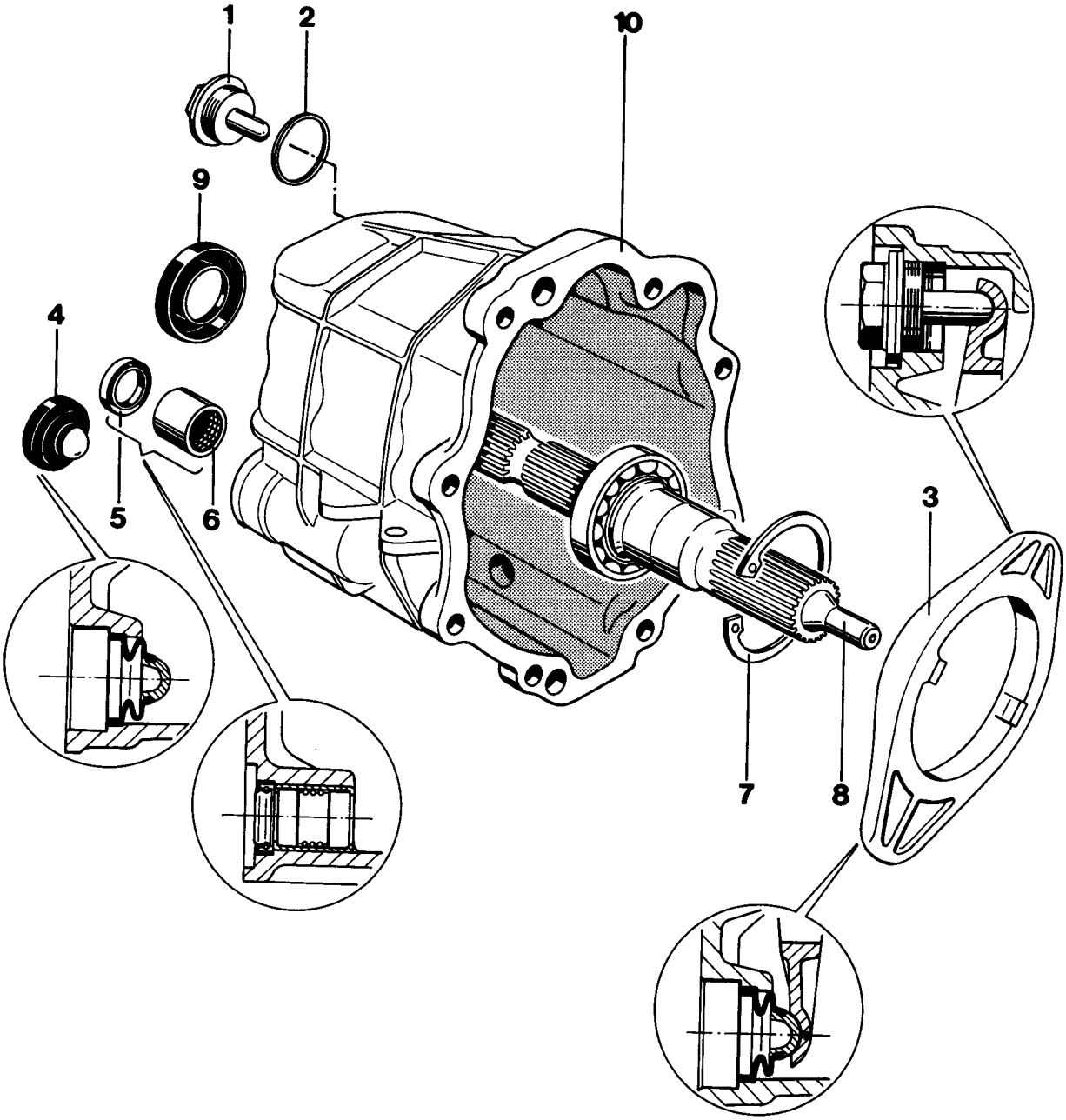

Printed in Germany – II, 1989

No.	Designation	Qty.	Note: Removal	Installation
1	Counter-bearing bolt	1		Tighten to 80 Nm (59 ftlb) torque
2	Sealing ring	1		Renew
3	Engagement lever	1		Install in correct position
4	Sealing gaiter**	1	Remove from the inside outwards	Oil lightly and press in with a suitable tube (e.g. VW 418 A), noting correct position
5	Shaft sealing ring	1	Lever out with screwdriver	Press in with special tool 9254, noting correct position
6	Ball sleeve	1	Pull out with a suitable internal-arm puller (e.g. 14 - 20, manufacturer Schrem)	Press in with special tool 9254, noting correct position
7	Circlip	1		
8	Output shaft	1	Press out	Press in
9	Shaft sealing ring	1		Install only after assembly of the output shaft. Oil the sealing lip lightly and press in flush with a suitable tube
10	Housing*	1		

* As a result of overlapping tolerances, the 9 +0.5 mm dimension on some transfer box housings has proved to be up to 0.5 mm too deep. To avoid the risk of front-rear differential lock malfunction, an additional washer 1 mm thick has been placed under the counter-bearing bolt

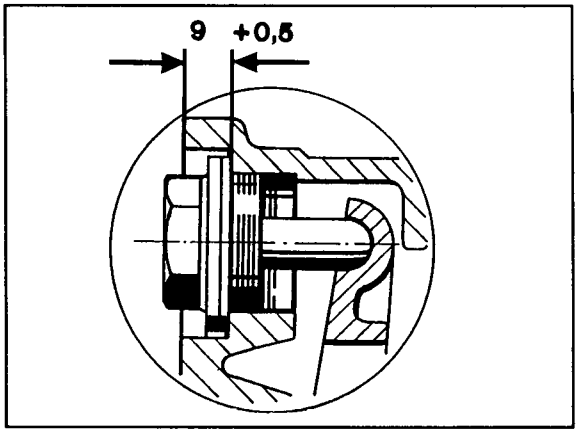

589-34

** If the sealing gaiter is leaking, always renew the slave cylinder.

Printed in Germany – X, 1990

Dismantling and assembling the transfer box housing (from 1991 model on)

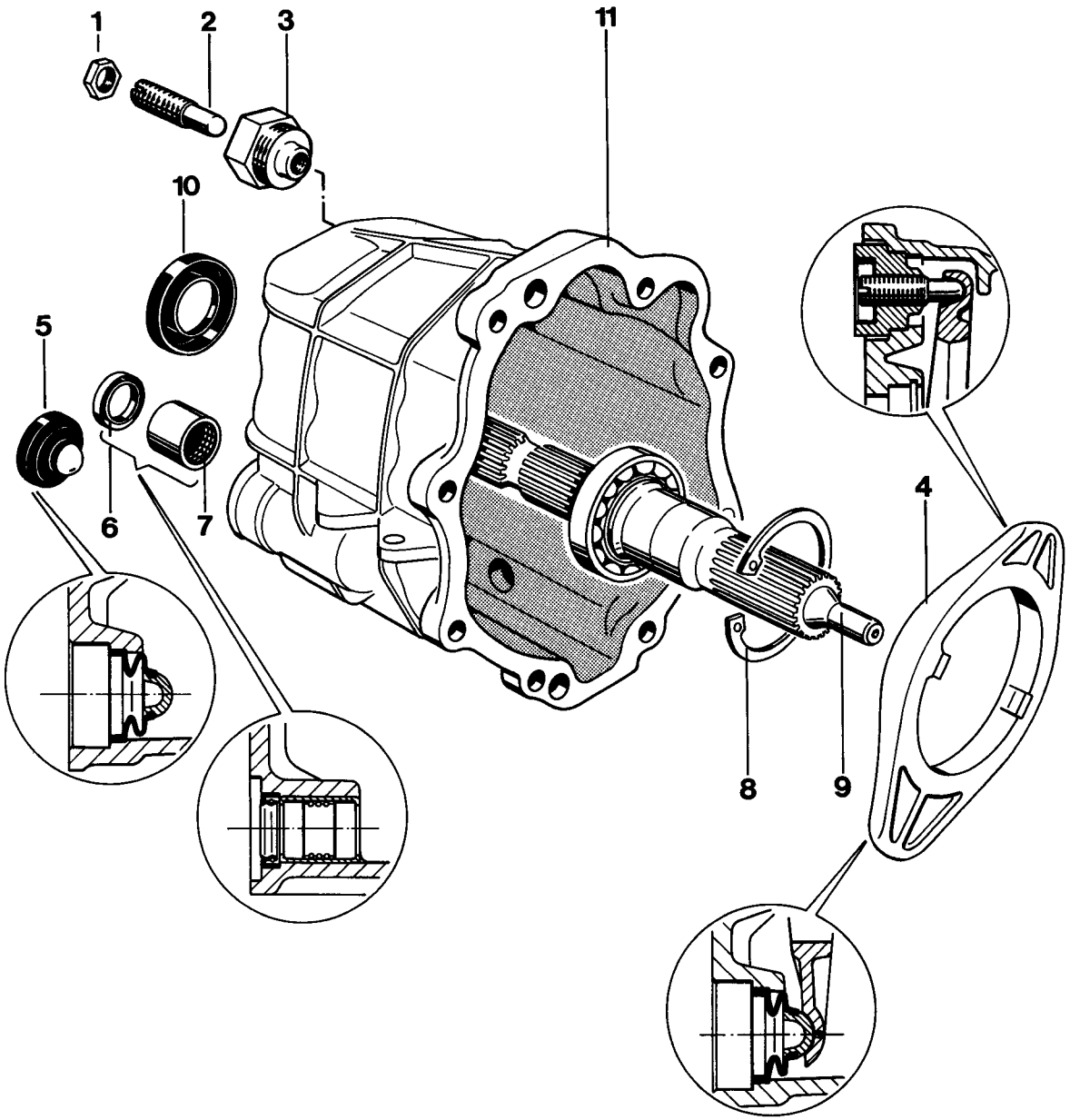

590-34

Printed in Germany – X, 1990

No.	Designation	Qty.	Note: Removal	Installation
1	Hex nut	1		Seal with Loctite 222 and tighten to 40 Nm (30 ftlb) torque
2	Bearing pin	1	Do not alter the setting of this pin or remove it unless renewing the plates or the front-rear differential lock.	Adjust; see Page 34 - 8b
3	Counter-bearing screw	1		Seal with Loctite 222 and tighten to 80 Nm (59 ftlb) torque
4	Engagement lever	1		Install in correct position
5	Sealing gaiter*	1	Remove from the inside outwards	Oil lightly and press in with a suitable tube (e.g. VW 418 A), making sure that the position is correct
6	Shaft sealing ring	1	Lever out with screwdriver	Press in with special tool 9254, making sure that position is correct
7	Ball sleeve	1	Pull out with a suitable internal-arm puller (e.g. 14 - 20, manufacturer Schrem)	Press in with special tool 9254, making sure that position is correct
8	Circlip	1		
9	Output shaft	1	Press out	Press in
10	Shaft sealing ring	1		Install only after assembly of the output shaft. Oil the sealing lip lightly and press in flush with a suitable tube.
11	Housing	1		

* If the sealing gaiter is leaking, always renew the slave cylinder as well.

Intermediate case, disassembling and assembling

Tools

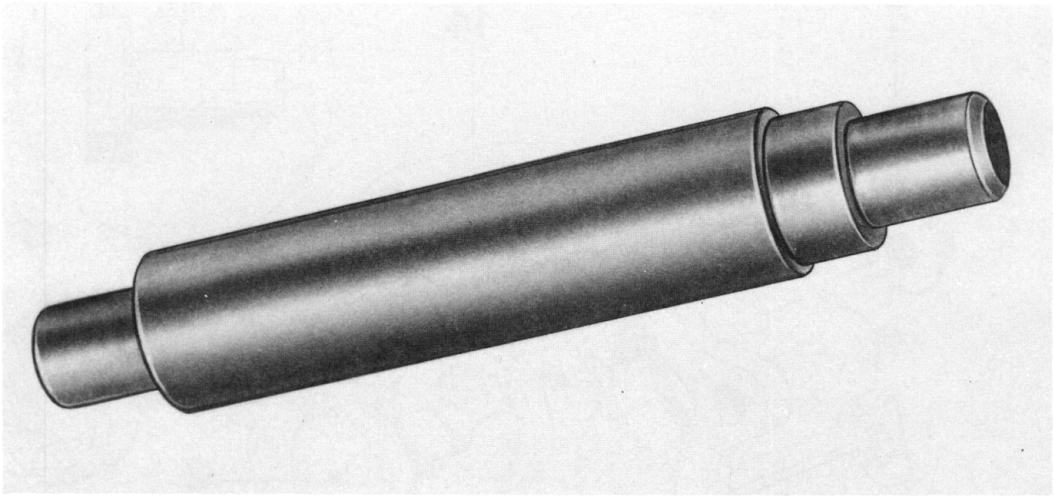

86/856

No.	Description	Special Tool	Order number	Remarks
	Mandrel	9254	000.721.925.40	

Printed in Germany – II, 1989

Intermediate case, disassembling and assembling

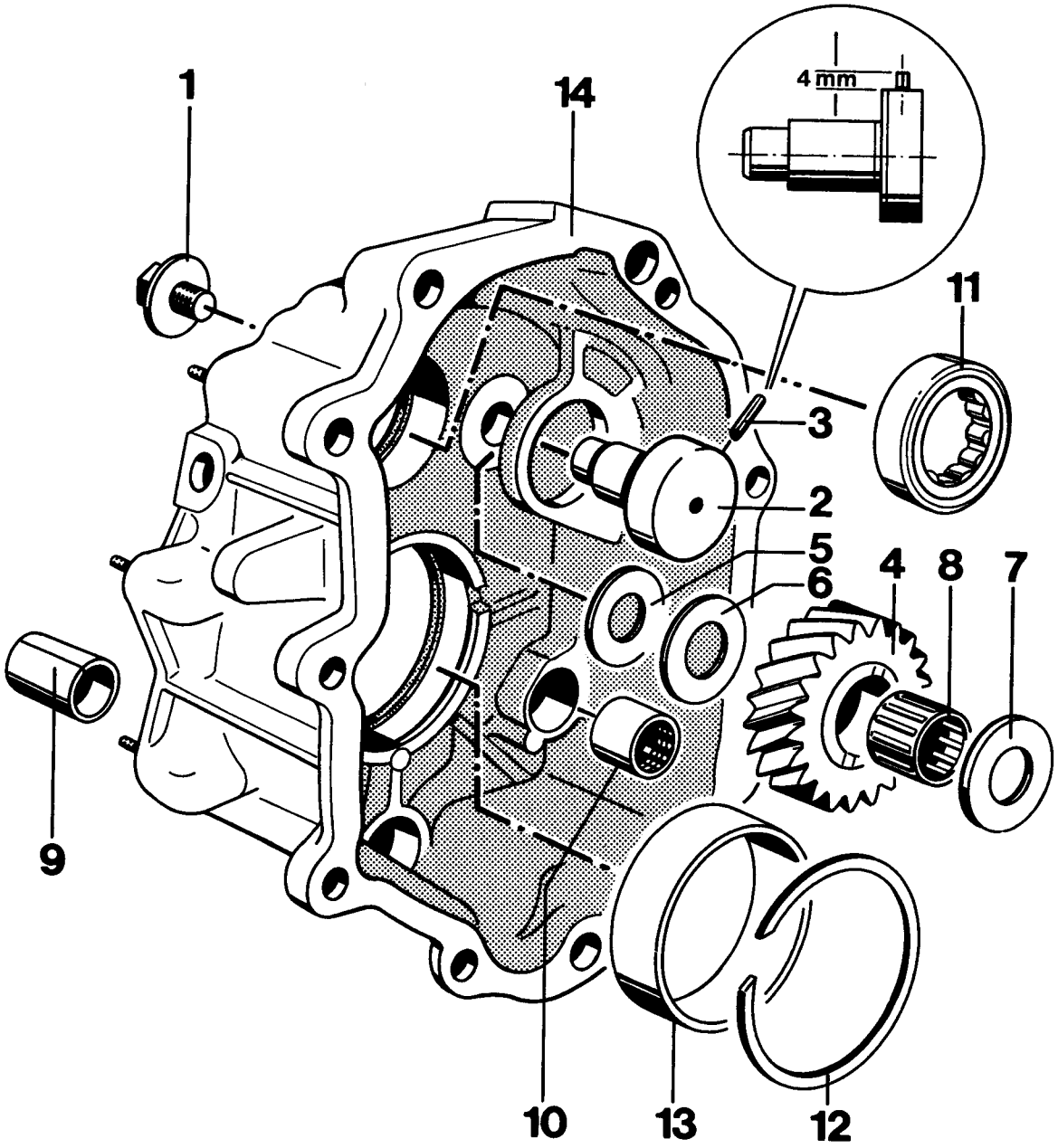

Printed in Germany – II, 1989

No.	Description	Qty.	Note when: Removing	Installing
1	Hexagon head screw	1		Apply film of Loctite 270 and tighten with 35 Nm (26 ft.lb.)
2	Bolt	1		
3	Dowel pin	1		Drive into correct pos.
4	Reverse idler gear	1		
5	Friction washer (2.0 mm thick)	1		
6	Friction washer (1.5 mm thick)	1		Do not confuse with washer No. 5
7	Friction washer (1.5 mm thick)	1		Do not confuse with washer No. 5
8	Needle-roller assembly	1		
9	Sleeve	1	Pull out with suitable internal puller (e.g. Schrem 14-20)	Press in level from outside using Special Tool 9254
10	Spherical sleeve	1	Pull out using suitable internal puller (e.g. Schrem 14 - 20)	Press in level from inside using Special Tool 9254
11	Cylindrical-roller bearing	1	Heat housing up to approx. 120 °C (248 °F) and drive inside from outside using a suitable mandrel	Heat housing up to approx. 120°C (248 °F) and insert using a suitable piece of tubing (e.g. VW 484). Press in again following heat exchange
12	Circlip	1		
13	Outer bearing race	1	Heat housing up to approx. 120 °C (248 °F) and drive inside from outside using a suitable mandrel.	Heat housing up to approx. 120 °C (248 °F) and insert using suitable piece of tubing (e.g. VW 472/1). Press in further following heat exchange
14	Housing	1		

Printed in Germany – II, 1989

Notes on assembly

Mount reverse idler gear with friction washers and bolt in the correct position (refer to explosion drawing). If friction washers and bolts are in the correct position, the front surface of the bolt is approx. 1.5 mm lower than the case casting and the reverse idler gear has an axial play of 0.15...0.35 mm.

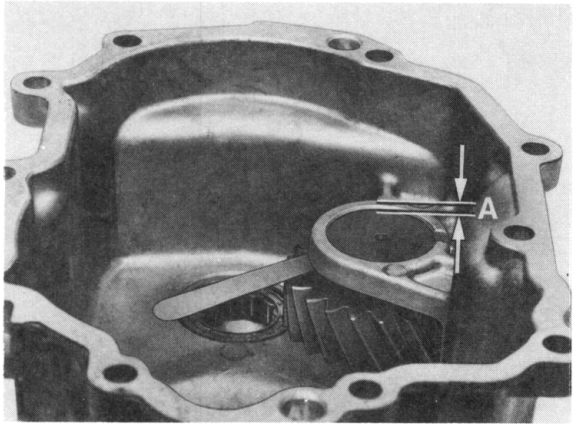

A = approx. 1.5 mm 88/340

Printed in Germany – II, 1989

Gear housing, disassembling and assembling

Tools

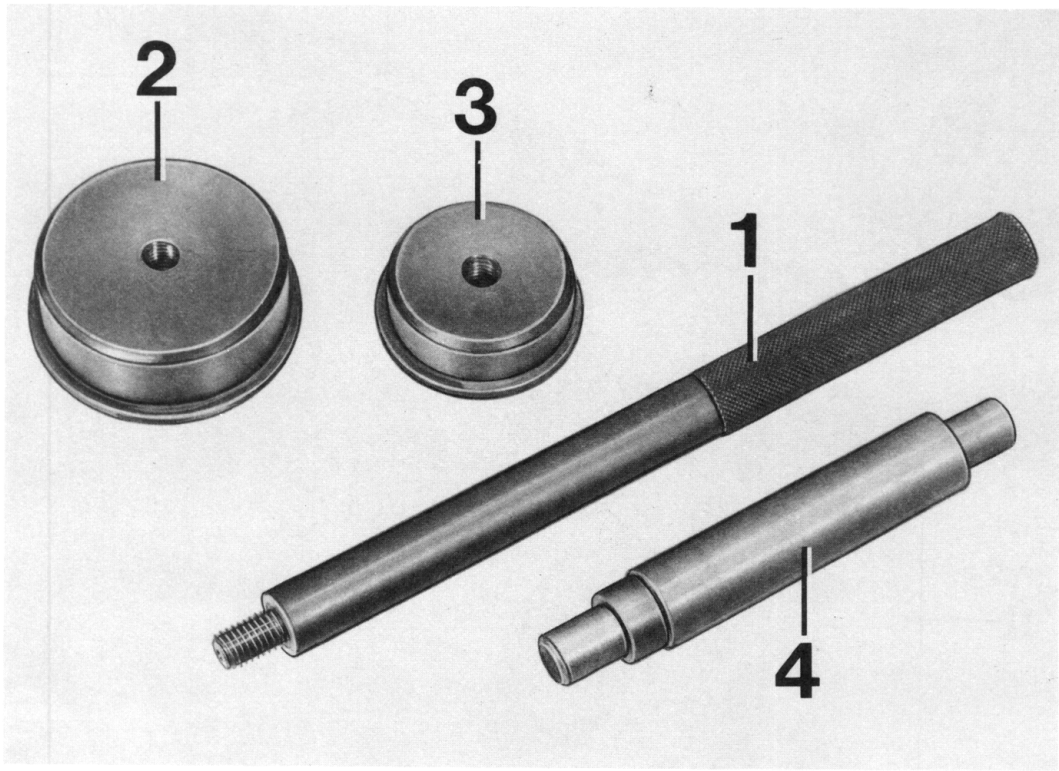

86/854

No.	Description	Special Tool	Order number	Remarks
1	Mandrel	P 254	000.721.254.00	
2	Pressing tool	P 254 a	000.721.254.10	
3	Pressing tool	P 254 b	000.721.254.20	
4	Mandrel	9254	000.721.925.40	

Printed in Germany – II, 1989

Gear housing, disassembling and assembling

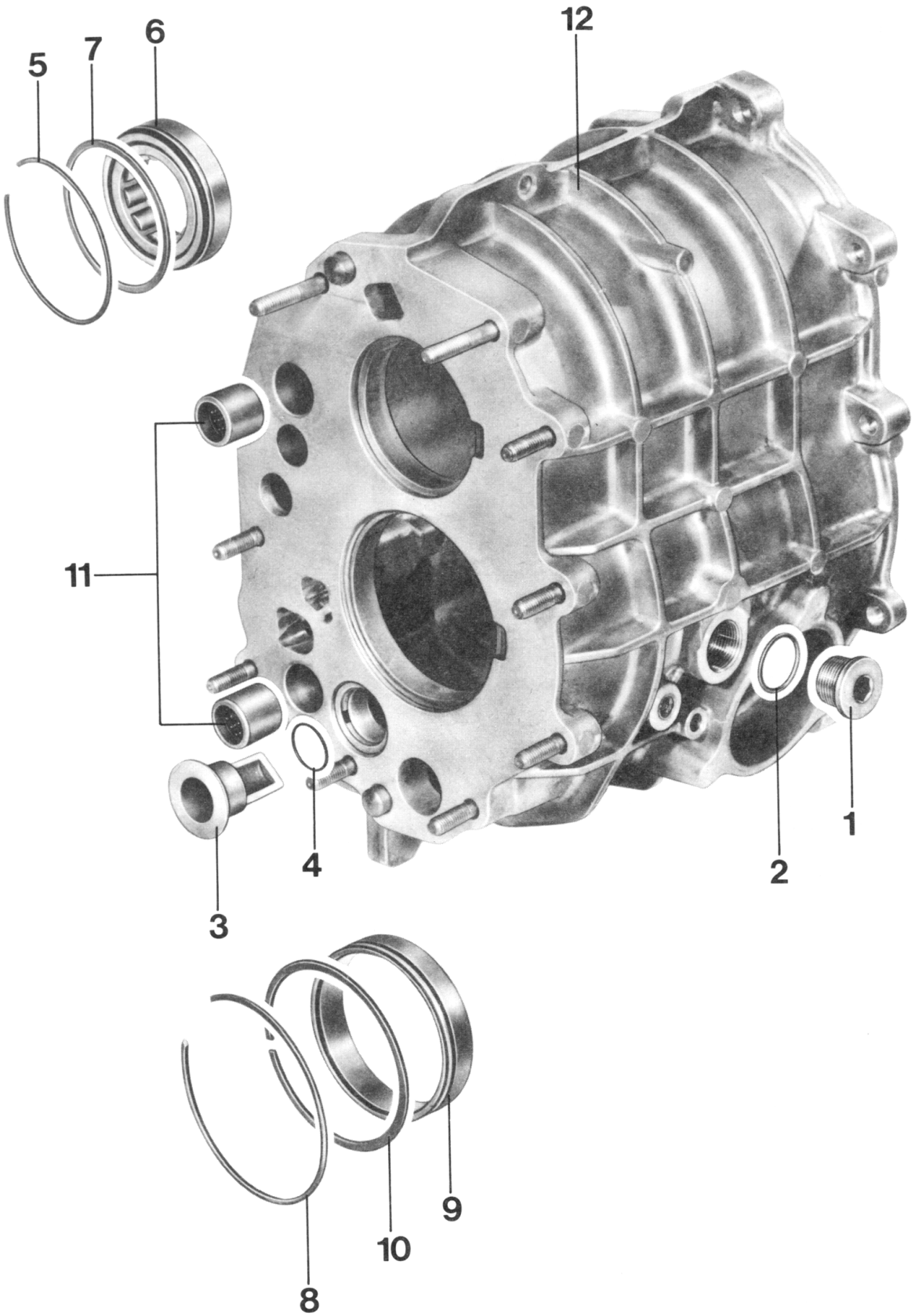

Printed in Germany – II, 1989

No.	Description	Qty.	Note when: Removing	Installing
1	Plug	1		Tighten with 30 Nm (22 ft.lb.)
2	Seal	1		Replace
3	Oil guide tube	1		Insert in correct position
4	O-ring	1		Replace
5	Circlip	1	Take out using suitable screwdriver	
6	Cylindrical-roller bearing	1	Heat gear housing up to approx. 120 °C (248 °F) and press outside from inside over the outer ring using Special Tools P 254 and P 254 b	Heat gear housing up to approx. 120 °C (248 °F) and press in over the outer ring using Special Tools P 254 and P 254 b.
7	Snap ring	1		
8	Circlip	1	Remove using suitable screwdriver	
9	Outer bearing race	1	Press outside from inside using Special Tools P 254 and P 254 a	Press in using Special Tools P 254 and P 254 a
10	Snap ring	1		
11	Spherical sleeve	2	Press out using suitable mandrel	Press in level from outside using Special Tool 9254
12	Gear housing	1		

Printed in Germany – II, 1989

Disassembling and assembling transmission case

Tools

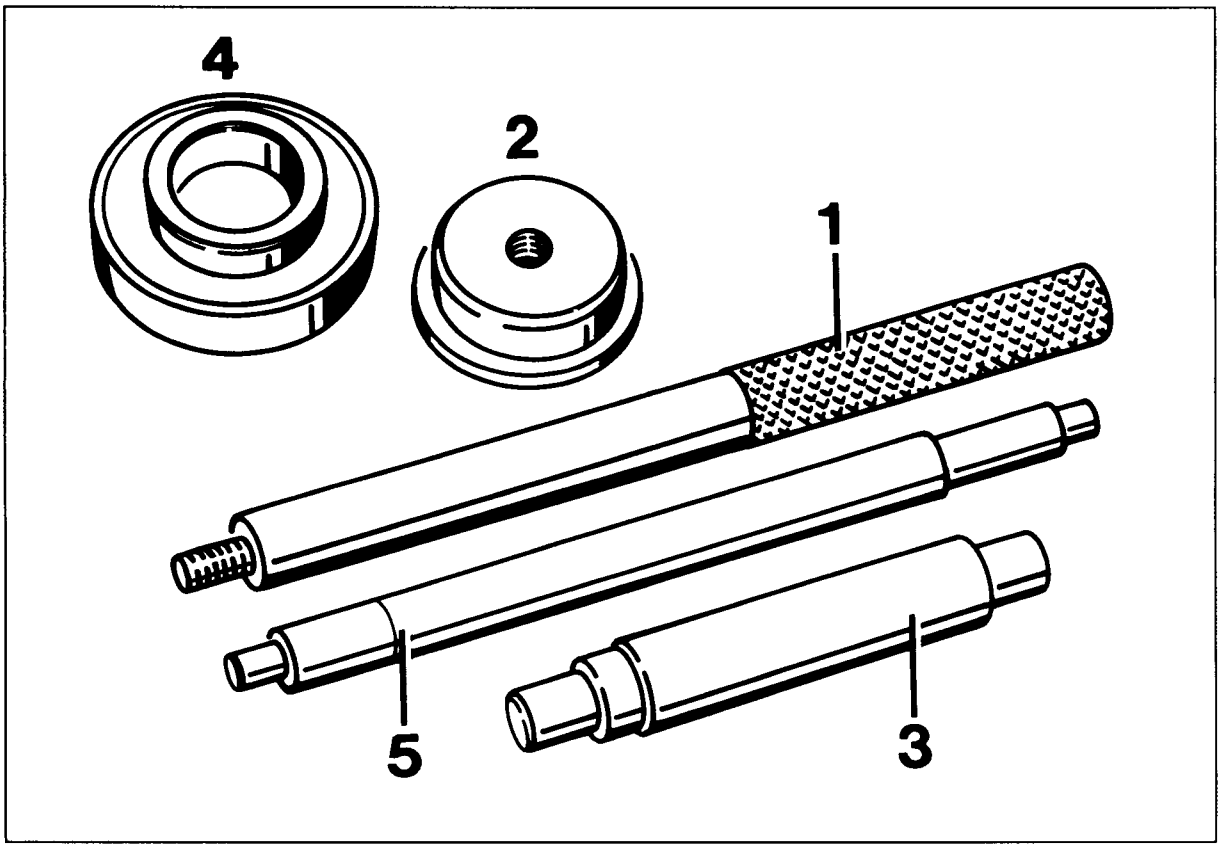

No.	Description	Special Tools	Order number	Remarks
1	Mandrel	P 254	000.721.254.00	
2	Pressure piece	P 254 b	000.721.254.20	
3	Mandrel	9254	000.721.925.40	
4	Pressure piece	9252	000.721.925.20	
5	Mandrel	9515	000.721.951.50	

Printed in Germany – X, 1990

Disassembling and assembling gearbox

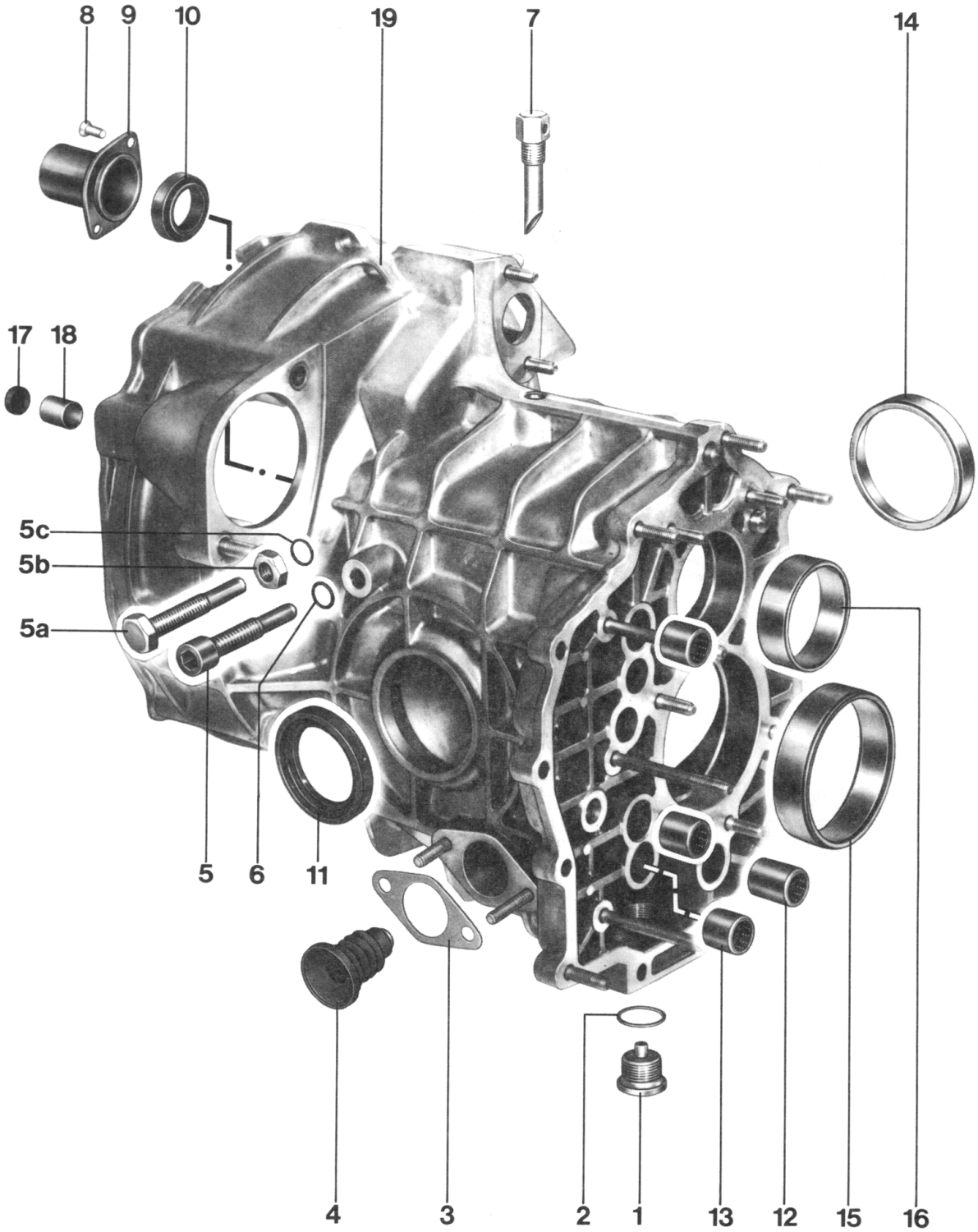

Printed in Germany – X, 1990

No.	Description	Qty.	Note when: Removing	Installing
1	Plug	1		Clean, tighten with 30 Nm (22 ft.lb.)
2	Seal	1		Replace
3	Seal	1		Replace
4	Boot	1		Apply light film of oil and press into position using suitable piece of tubing (e.g. VW 418 a)
5	Fillister-head screw	1		Tighten with 65 Nm (48 ft.lb.)
5a	Counter-bearing*	1	Adjust or remove only if lateral differential lock plates are renewed	Re-adjust if necessary and lock with hex nut
5b	Hex nut	1		Seal with Loctite 222, tightening torque 85 Nm
5c	Sealing ring**			Renew
6	Disk	1		
7	Bleeder	1		Tighten with 35 Nm (26 ft.lb.). Observe installation position.
8	Oval-head screw	2		Tighten with 10 Nm (7.5 ft.lb.)
9	Guide tube	1		
10	Shaft seal	1		Only install after fitting the gear set (also refer to Page 34 - 18)
11	Shaft seal	1		Drive into position with Special Tool 9252. Pack area between sealing lips with Silubrin grease S from Klüber

* From 1991 model on, starter motor with external bearing

** As of March 1991, the sealing ring at the adjustable mating bearing screw is omitted. To seal, Loctite 222 is applied.

Printed in Germany – XI, 1991

No.	Description	Qty.	Note when: Removing	Installing
12	Spherical sleeve	1	Pull out with suitable internal puller (e.g. Schrem 14-20)	Press in level with Special Tool 9254
13	Spherical sleeve	3	Pull out with suitable internal puller (e.g. Schrem 14-20)	Press in level with Special Tool 9254
14	Outer bearing race	1	Heat transmission case up to approx. 120 °C (248 °F) and press in using suitable pressing tool	
15	Outer bearing race	1	Heat transmission case up to approx. 120 °C (248 °F) and drive out using suitable mandrel	Heat transmission case up to approx. 120 °C (248 °F) and press into position using suitable pressing tool (e.g. VW 204 b)
16	Outer bearing race	1	Heat transmission case up to approx. 120 °C (248 °F) and pull out using suitable internal puller (e.g. Schrem 50-60)	Heat transmission case up to approx. 120 °C (248 °F) and press into position using Special Tools P 254 and 254 b
17	End cover**	1		
18	Bushing**	1	Drive out from the inside with arbor 9515	Do not grease or oil; do not clean with solvents (e.g. white spirit. Drive in fully from the inside with arbor 9515
19	Transmission case	1		

** From 1990 model on, starter motor with external bearing

Assembly notes

1. Fit bleeder in correct position and tighten with **35 Nm (26 ft.lb.)**.

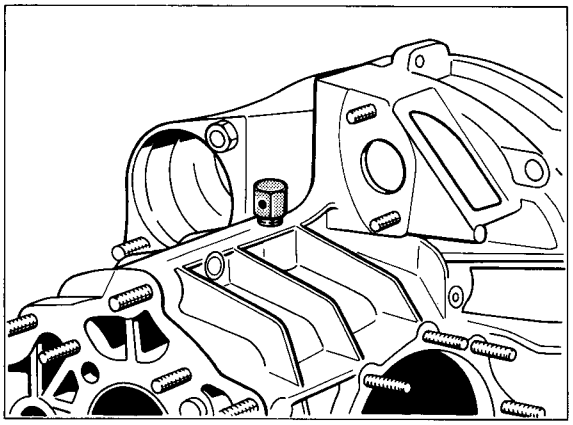

86 - 824

Note:

The hole in the hexagon head of the bleeder must point towards the front viewed from the driving seat (towards the intermediate case).

2. Apply light film of oil to the boot and press into position with suitable piece of tubing (e.g. VW 418 a).

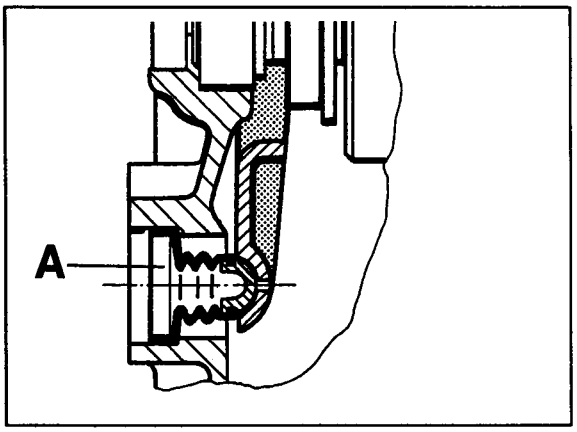

A = Boot 210-34

Note

If the sealing gaiter is leaking, always renew the slave cylinder.

Printed in Germany – X, 1990

Adjusting the gearshift assembly

1. Set shift lever to neutral. The shift lever will automatically move into the 3rd and 4th gear shift plane (no adjustment possible).

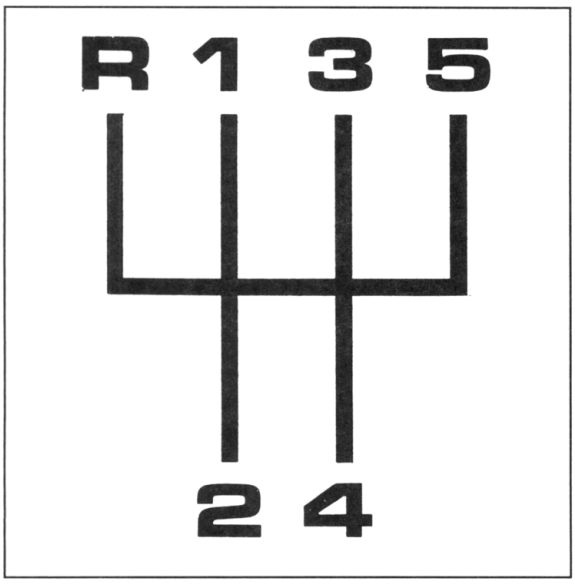

2049-34

2. When the gearshift is adjusted correctly, the underside of the shift lever is not inclined in a longitudinal direction. This means that the lower section is at a 90° angle to the central tube and the frame tunnel, respectively.

Note

The upper part of the shift lever is slightly inclined towards the rear since only the lower part of the shift lever is straight (not evident from drawing No. 644).

3. Checking the adjustment: Shift through all gears. The clearance between the front and rear of the console must be approximately the same in all gears.

4. If required, correct adjustment at the adjustable guide tube (No. 8).
One turn of the ball joint corresponds to a change of inclination of approx. 3 to 5 mm at the shift lever.
Caution: When tightening the lock nut, make sure the ball joints are **not** twisted with regard to each other.

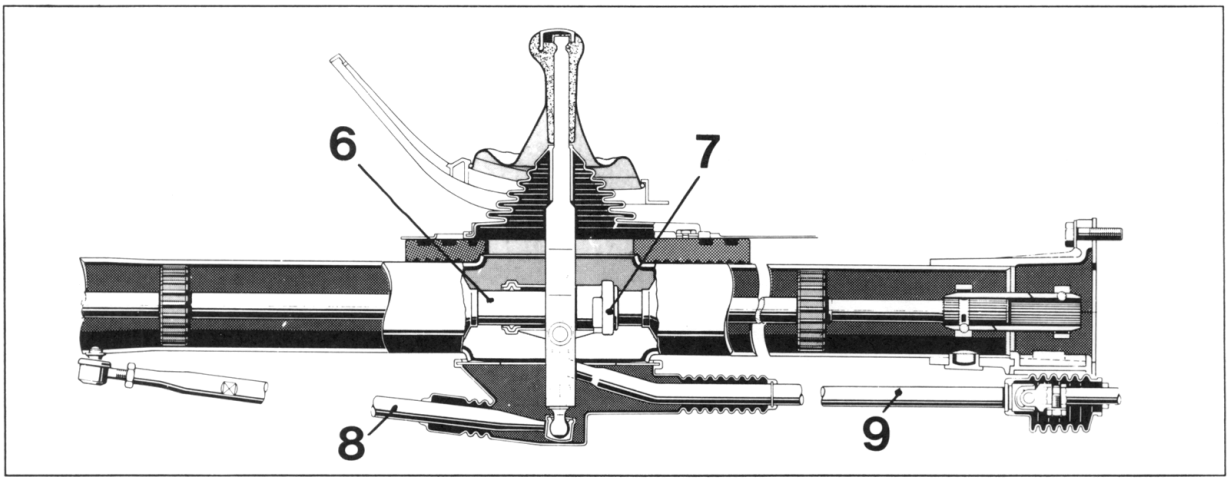

Printed in Germany XXII 1994

Partially disassembling the gear set

Printed in Germany – II, 1989

Partially disassembling the gear set

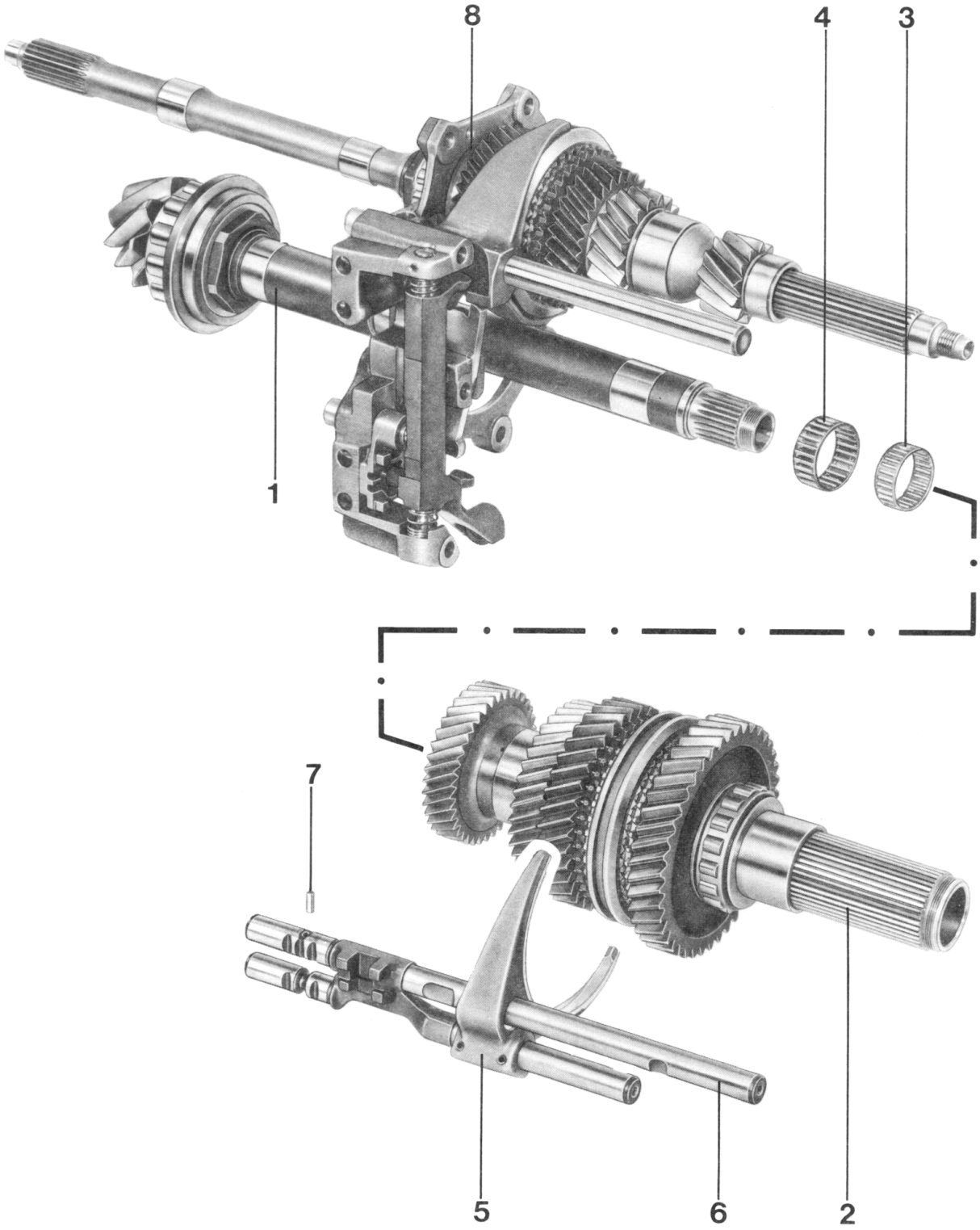

Printed in Germany – II, 1989

No.	Discription	Qty.	Note when: Removing	Installing
1	Drive pinion	1		
2	Hollow shaft	1		
3	Needle-roller assembly	1		
4	Needle-roller assembly	1		
5	Shift rod with gearshift fork (1st and 2nd gear)			Observe position of locks
6	Shift rod (5th and reverse gears)	1		Observe position of locks
7	Locking pin	1		Insert into shift rod (5th and reverse gears) with grease
8	Tensioning plate with internal shaft	1		

Printed in Germany – II, 1989

Notes on assembly

Assembling

1. Observe installation position of locks.

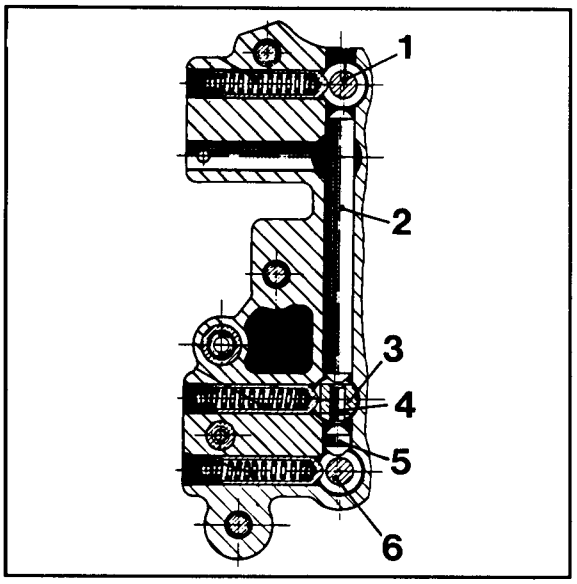

160-35

1 = Shift rod 3/4
2 = Lock
3 = Shift rod 5/R
4 = Locking pin
5 = Lock
6 = Shift rod 1/2

Printed in Germany – II, 1989

Disassembling and assembling input shaft

Tools

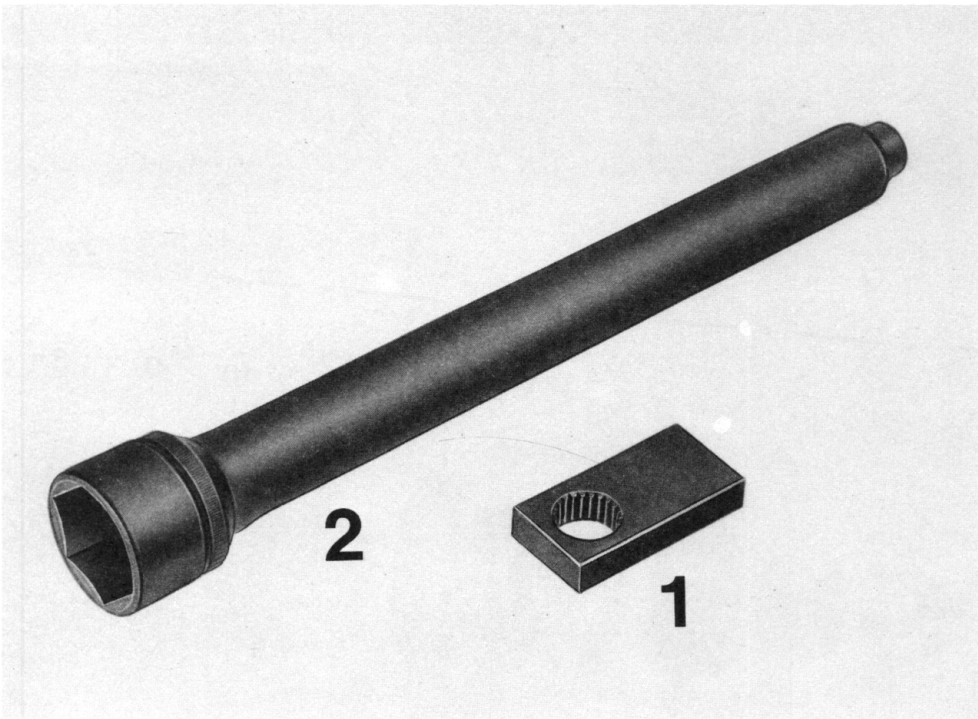

86/907

No.	Description	Special Tool	Order number	Remarks
1	Retainer plate	9177	000.721.917.70	
2	Socket wrench	9105	000.721.910.50	

Printed in Germany – II, 1989

Disassembling and assembling input shaft

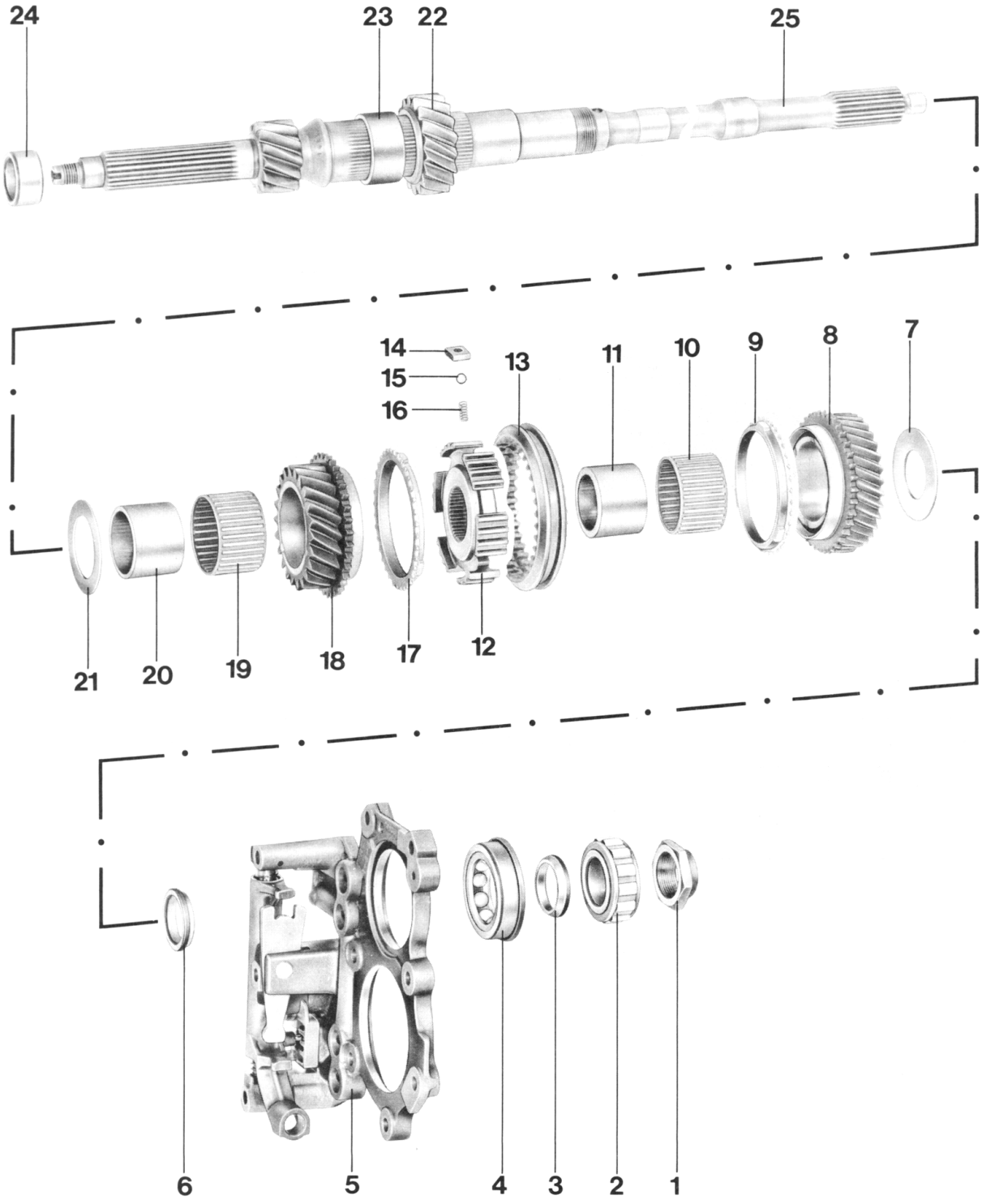

Printed in Germany – II, 1989

No.	Description	Qty.	Note when: Removing	Installing
1	Collar nut	1	Undo with Special Tools 9177 and 9105	Use Special Tools 9177 and 9105, tighten with 250 Nm (184.5 ft.lb.). Notch the collar to secure
2	Cylindrical-roller bearing		Press off using suitable separating device (e.g. Kukko 17-1)	Heat up to approx. 120 °C (248 °F) and press into position with suitable piece of tubing
3	Inner bearing race	1	Press off using suitable separating device (e.g. Kukko 17-1)	Heat up to approx. 120 °C (248 °F) and press into position with suitable piece of tubing
4	Four-point bearing	1		
5	Tensioning plate	1		Clamp in the vice (use protective jaws). Select 5th gear, use input shaft with pin-secured shift rod / shift fork together. Observe pos. of locks (refer to Page 35-12)
6	Inner bearing race	1	Press off using suitable separating vice (e.g. Kukko 17-1)	Heat up to approx. 120°C (248 °F) and press into position using suitable piece of tubing
7	Friction washer	1		Large flat-ground side points towards needle-roller assembly
8	Loose gear (4th gear)	1		Only replace in pairs
9	Synchronizing disk	1	Mark for refitting	Check for wear, assemble in correct position with the same gear wheel (cogs towards driver dogs)
10	Needle-roller bearing	1	Mark	Assemble with the same gear wheel

Printed in Germany – II, 1989

No.	Description	Qty.	Note when: Removing	Installing
11	Inner race	1		Heat up to approx. 120°C (248 °F) and press into position
12	Guide sleeve	1	Remove with gearshift sleeve	Gearshift sleeve and guide sleeve are matched, fit together with gearshift sleeve and synchronizing compon.
13	Gearshift sleeve (3rd and 4th gear)	1	Spring-loaded synchronizing components may jump out. Mark for refitting	Observe inst. position, mount together with guide sleeve and synchronizing components. Only replace in pairs
14	Driver dogs	3		Insert in correct position
15	Ball	3		
16	Spring	3		Relaxed length = 11.8 + 0.3 mm, wire thickness = 0.8 mm. Do not confuse with springs for 1st and 2nd gears
17	Synchronizing disk	1	Mark for refitting	Check for wear, assemble in correct position with the same gear wheel (cogs toward driver dogs)
18	Loose gear (3rd gear)	1		Only replace in pairs
19	Needle-roller assembly	1	Mark for refitting	Assemble with the same gear wheel
20	Inner race	1		Heat up to approx. 120°C (248 °F) and press into position
21	Friction washer (1.85 mm thick)	1		
22	Fixed gear (2nd gear)	1		Only replace in pairs. Collar points towards spacer

Printed in Germany – II, 1989

No.	Description	Qty.	Note when: Removing	Installing
23	Spacer	1		
24	Cylindrical-roller bearing - inner race	1	Press off using suitable separating device (e.g. Kukko 17- 0)	Heat up to approx. 120°C (248 °F) and press into position
25	Input shaft	1		

Printed in Germany – II, 1989

Notes on disassembling and assembling

Disassembling

1. Clamp retaining plate 9177 in the vice, insert input shaft and undo collar nut with Special Tool 9105.

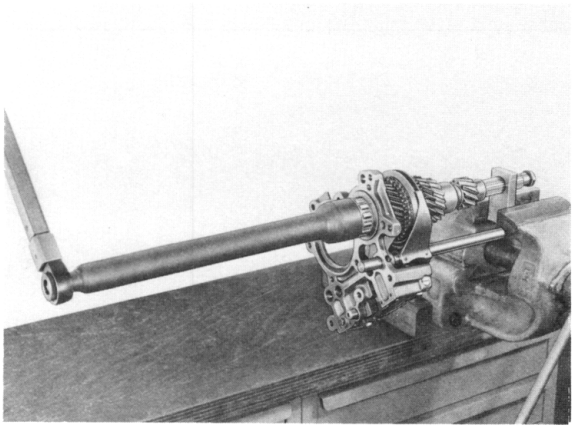

86/687

2. Remove all parts from the input shaft by pressing off with suitable separating device (e.g. Kukko 17-1).

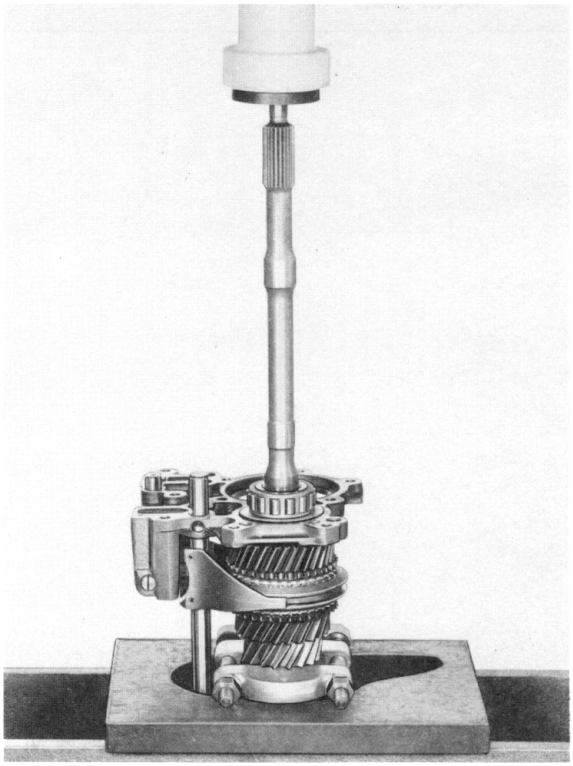

86/683

Printed in Germany – II, 1989

Assembling

Note

All components must be fitted onto the input shaft dry to ensure that no oil penetrates between the contact surfaces.

1. Fit driver dogs for synchronization in correct position (curved side towards gear shift sleeve).

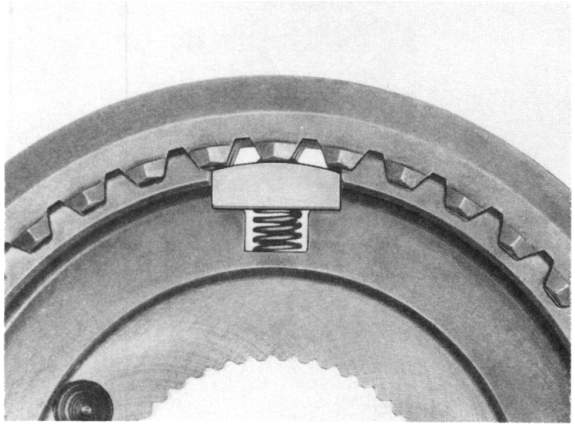

2. Installation position of gearshift sleeve. The dotting mark must be fitted centrally in relation to the driver dogs.

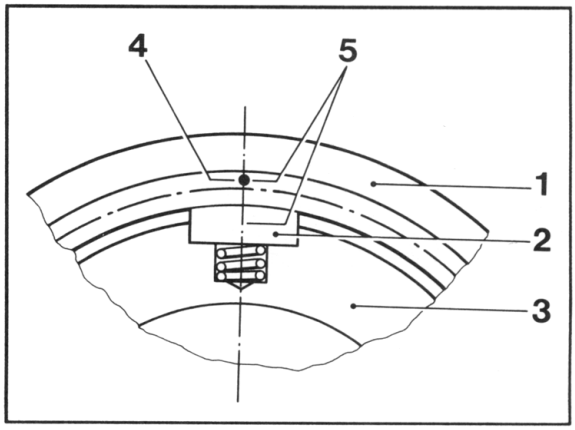

55-35

1 = Gearshift sleeve
2 = Driver dog
3 = Guide sleeve
4 = dotting mark
5 = Installation position

Printed in Germany – II, 1989

3. Check synchronizing disks by pressing onto the cones of the gear wheels and measuring gap "A" with a feeler gauge.

Installation dimension (new) = min. 0.9 mm
Wear limit = 0.6...0.7 mm

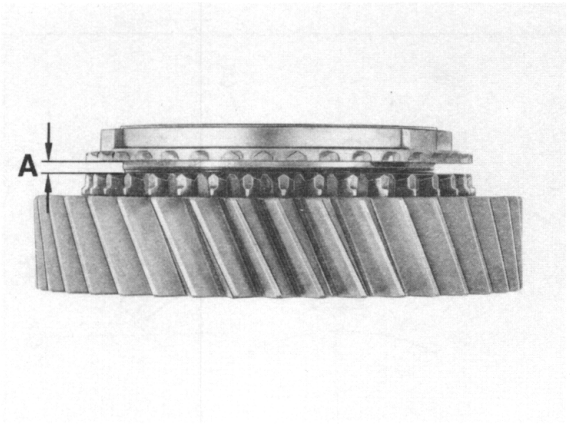

4. Tighten collar nut with 250 Nm (184.5 ft.lb.) and notch collar to secure.

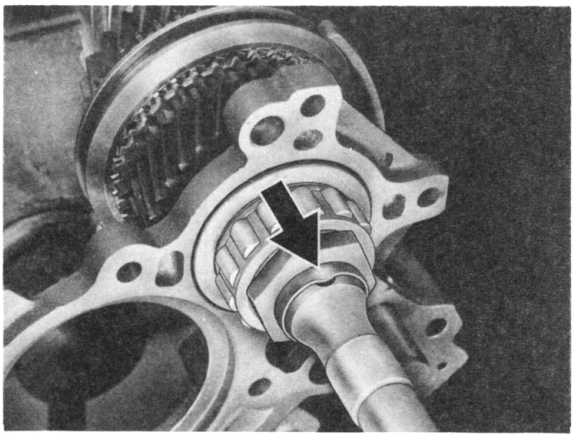

86/681

5. Observe installation position of locks.

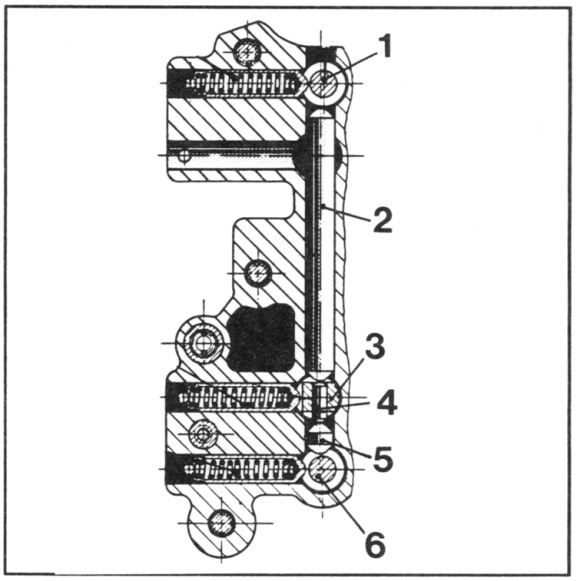

160-35

1 = Shift rod 3/4
2 = Lock
3 = Shift rod 5/R
4 = Locking pin
5 = Lock
6 = Shift rod 1/2

Printed in Germany – II, 1989

Disassembling and assembling drive pinion

Tools

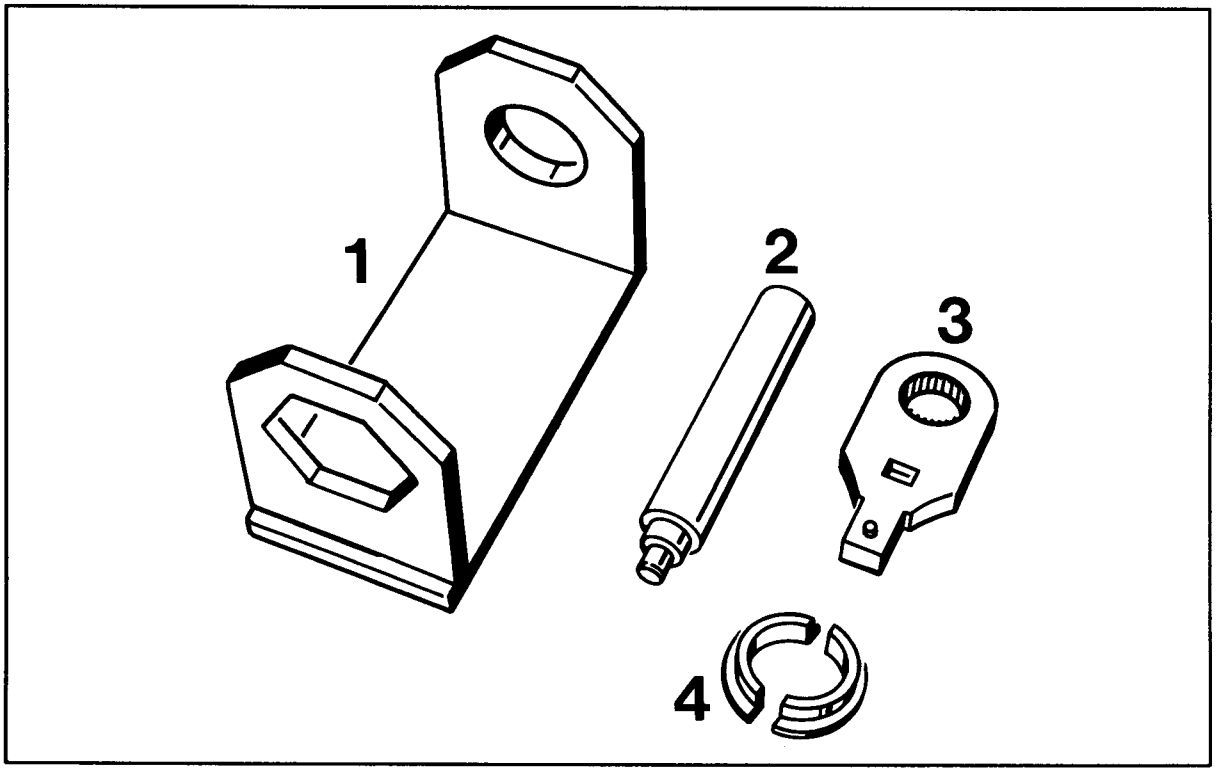

192-35

No.	Description	Special Tools	Order number	Remarks
1	Bracket	9142	000.721.914.20	
2	Pressing tool	9298	000.721.929.80	
3	Insert	9282	000.721.928.20	
4	Half shells	9142/1	000.721.914.21	

Printed in Germany – II, 1989

Disassembling and assembling drive pinion

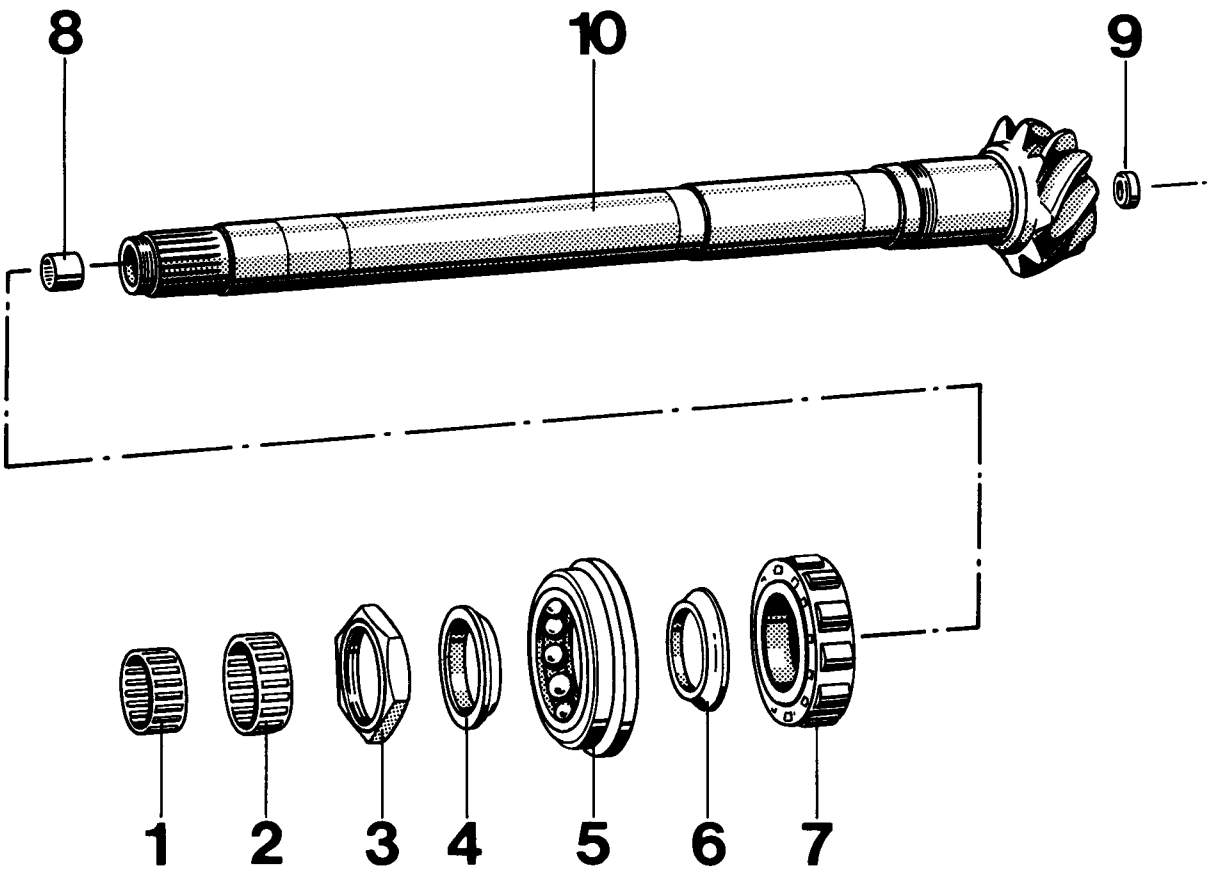

Printed in Germany – II, 1989

No.	Description	Qty.	Note when: Removing	Installing
1	Needle cage	1		
2	Needle cage	1		
3	Lock nut	1	Remove with Special Tools 9142, 9142/1 and 9282	Tighten with 240 Nm (177 ft.lb.) and secure by notch collar
4	Inner bearing race	1	Press out with suitable separating device (e.g. Kukko 15-17)	Do not confuse with inner race No. 6, heat up to approx. 120 °C (248 °F) and press into position with suitable piece of tubing (e.g. VW 519)
5	Four-point bearing	1		
6	Inner bearing race	1	Press out with suitable separating device (e.g. Kukko 15-17)	Do not confuse with inner race No. 4, heat up to approx. 120 °C (248 °F) and press into position with suitable piece of tubing (e.g. VW 519)
7	Cylindrical-roller bearing	1	Press out with suitable separating device (e.g. Kukko 15-17)	Heat up to approx. 120°C (248 °F) and press in to correct position
8	Needle bush	1	Press out with suitable internal puller (e.g. Schrem 10-14) and VW 771	Replace, press into position with Special Tool 9298
9	Ring	1	Pull out with suitable internal puller (e.g. Schrem 10-14) and VW 771	Press in to correct position (with crowned side outwards)
10	Drive pinion	1		Observe matching number, adjust again if necessary

Printed in Germany – II, 1989

Notes on disassembly and assembly

Disassembling

1. Remove lock nut with Special Tools 9142, 9142/1 and 9282.

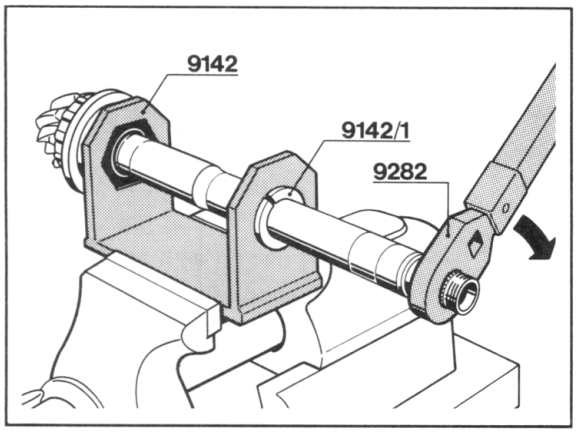

211 - 35

Assembling

1. Heat cylindrical-roller bearing up to approx. 120 °C (248 °F) and press into correct position.

Note

Fit the bearing in such a way that the collar of the roller cage points towards the four-point bearing.

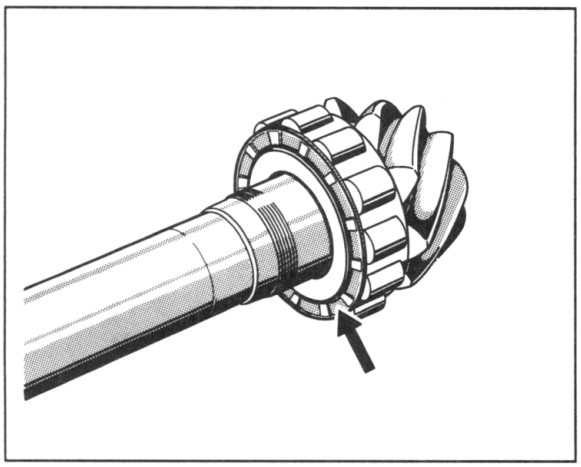

120-35

2. Heat inner bearing rings for four-point bearing up to approx. 120 °C (248 °F) and press into correct position.

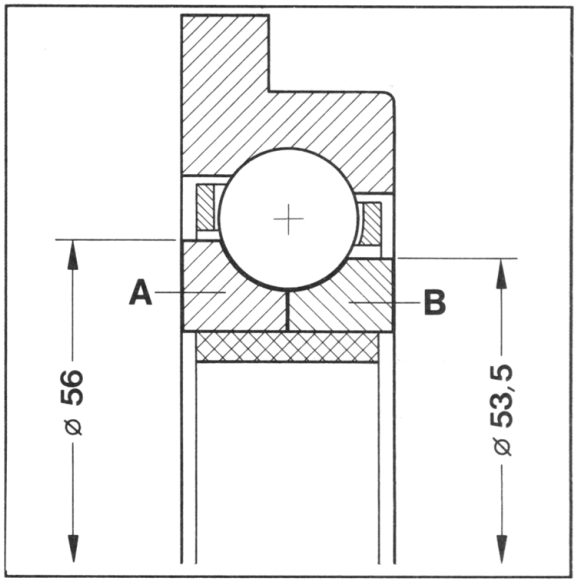

187-35

A = larger inner race (outer diameter 56 mm), points towards pinion head when installed

B = smaller inner race (outer diameter 53.5 mm), points towards fixed gear - 4th gear when installed

Printed in Germany – II, 1989

3. Tighten lock nut with 240 Nm (177 ft.lb.) and recess a collar to secure

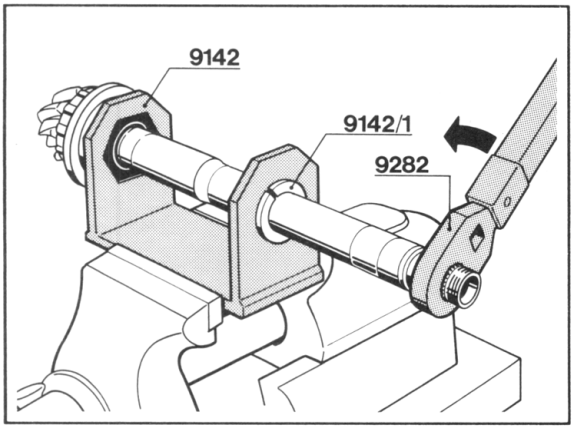

211 - 35

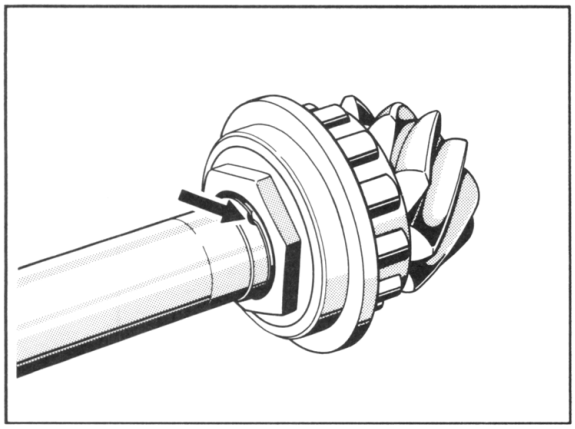

119 - 35

Printed in Germany – II, 1989

Disassembling and assembling hollow shaft

Tools

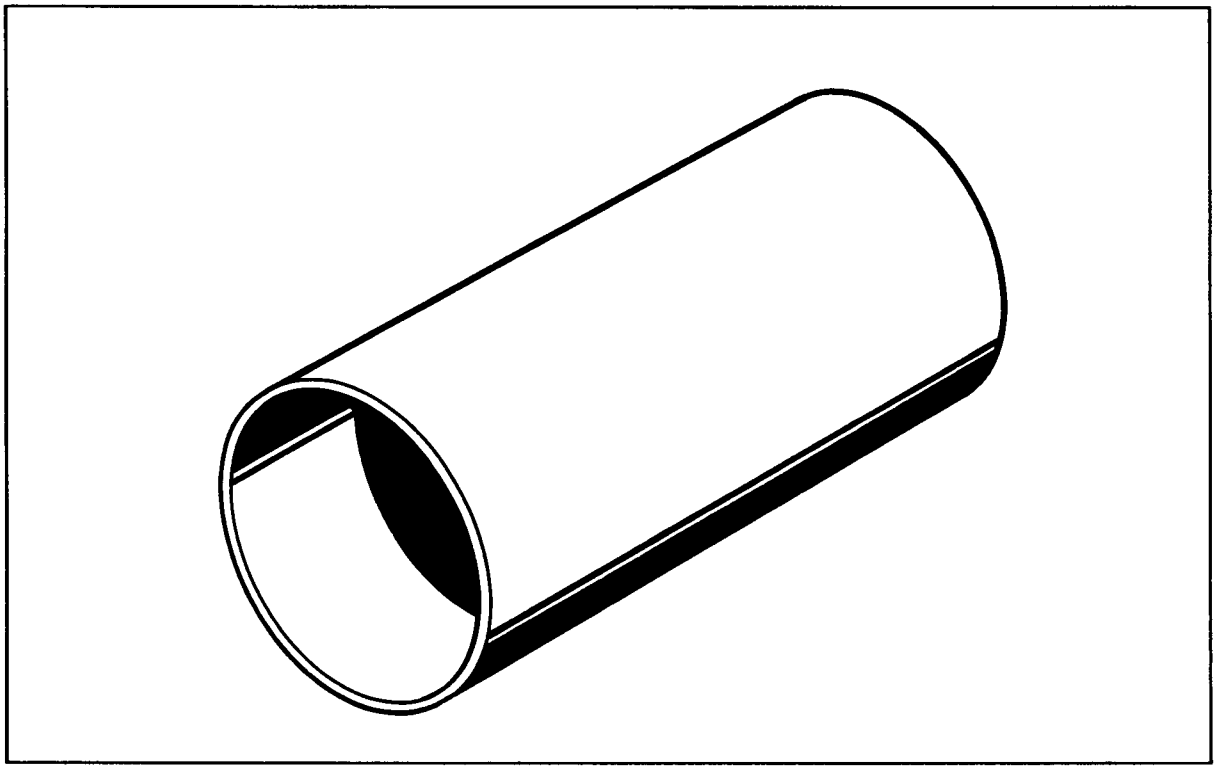

232-35

No.	Description	Special Tools	Order number	Remarks
	Spacer sleeve	9279	000.721.927.90	

Printed in Germany – II, 1989

Disassembling and assembling hollow shaft

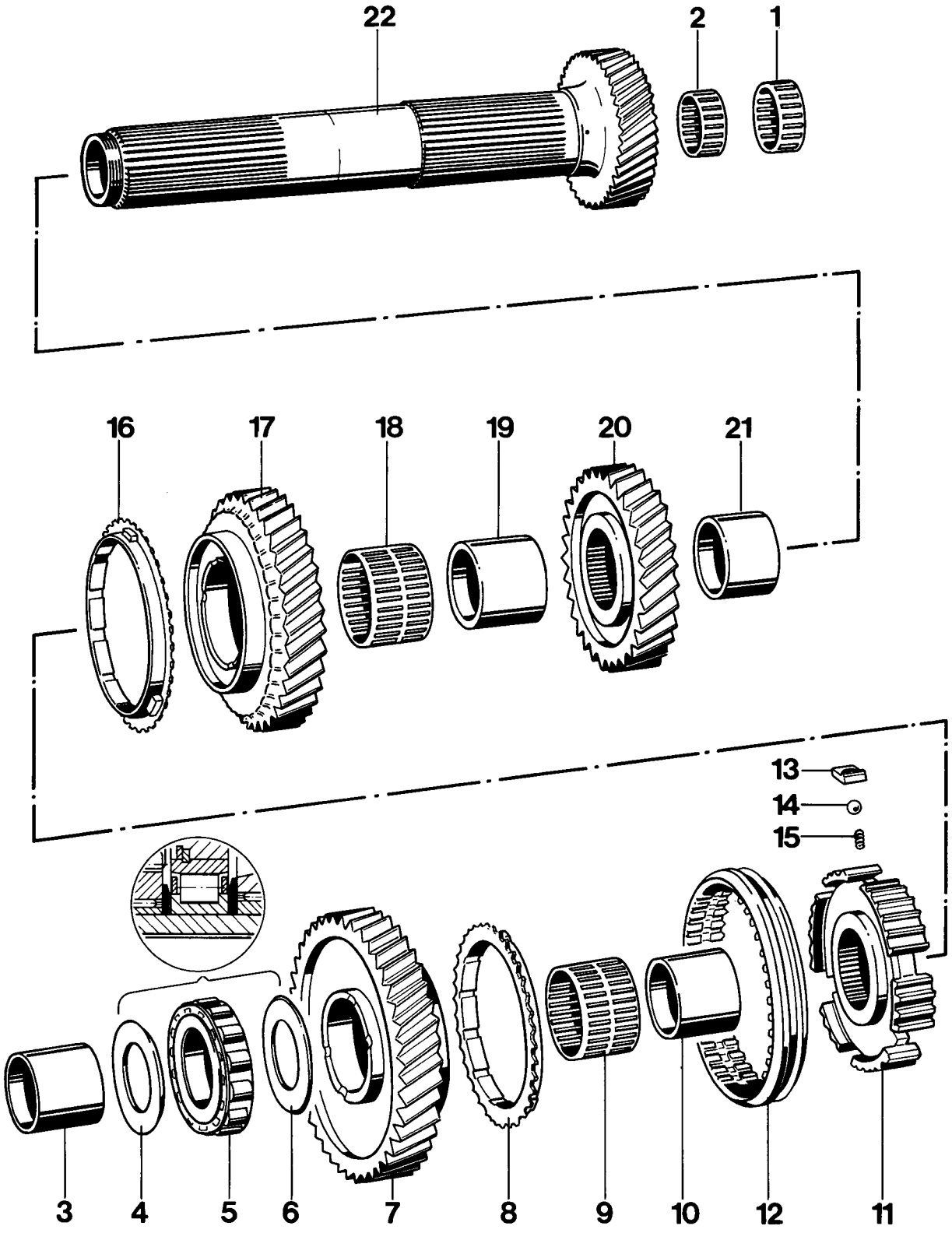

Printed in Germany – II, 1989

No.	Description	Qty.	Note when: Removing	Installing
1	Needle-roller assembly	1		
2	Needle-roller assembly	1		
3	Inner race	1	Mark for refitting	Assemble with same gear wheel
4	Friction washer (outer diameter 64 mm, 2.8 mm thick)			Do not confuse with washer No. 6, flat-ground side points towards needle bearing
5	Cylindrical-roller bearing	1		Heat up to approx. 120 °C (248 °F)
6	Friction washer (outer diameter 69 mm, 2.8 mm thick)			Do not confuse with washer No. 4, flat-ground side points towards needle bearing
7	Loose gear (1st gear)	1		Only replace in pairs
8	Synchronizing disk	1	Mark for refitting	Check for wear, mount in correct position with same gear wheel (cogs toward driver dogs)
9	Needle-roller assembly	1	Mark for refitting	Assemble with same gear wheel
10	Inner race	1	Mark for refitting	Assemble with same gear wheel. Heat up to approx. 120 °C (248 °F).
11	Guide sleeve	1	Remove with gearshift sleeve	Only replace in pairs, fit together with gearshift sleeve and synchronizing components
12	Gearshift sleeve (1st + 2nd gear)	1	Spring-loaded synchronizing components may spring out	Only replace in pairs, fit together with guide sleeve and synchronizing components
13	Diver dog (with guide lug)	3		Do not confuse with dogs for 3rd to 5th and rev. gear

Printed in Germany – II, 1989

No.	Description	Qty.	Note when: Removing	Installing
14	Ball	3		
15	Spring	3	Mark for refitting	Relaxed length 10.7 ±0.2 mm, wire thickness 0.9 mm. Do not confuse with springs for 3rd to 5th and rev. gear
16	Synchronizing disk	1	Mark for refitting	Check for wear, assemble in correct position with same gear wheel (cogs to driver dogs)
17	Loose gear (2nd gear)	1		Only replace in pairs
18	Needle-roller assembly	1	Mark for refitting	Assemble with same gear wheel
19	Inner race	1	Mark for refitting	Assemble with same gear wheel
20	Fixed gear (3rd gear)	1		Only replace in pairs. Large collar points towards friction washer
21	Spacer bush	1		
22	Hollow shaft	1		

Printed in Germany – II, 1989

Notes on disassembling and assembling

Disassembling

1. Remove all components (No. 3 to 20) from hollow shaft by pressing off with suitable separating device (e.g. Kukko 15-17).

Assembling

Note

All components must be fitted onto hollow shaft dry to ensure that no oil penetrates between the contact surfaces.

1. Fit driver dogs for synchronization with the lug pointing towards gearshift sleeve. It does not matter whether the lug points to the left or right.

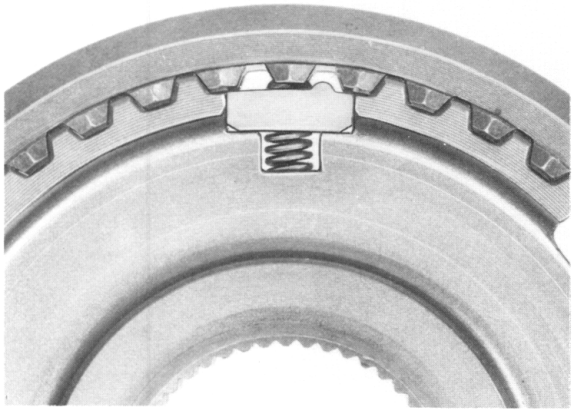

86/862

2. Check synchronizing disks by pressing onto the cones of the gear wheels and measuring gap "A" with a feeler gauge.

   Installation dimension (new) = min. 1.1 mm
   Wear limit = 0.6 ... 0.7 mm

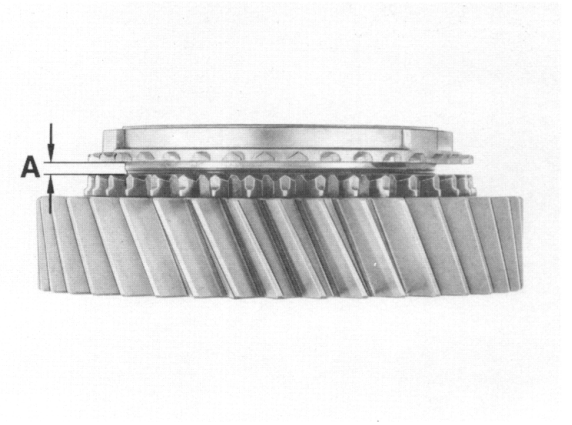

3. Preload gear block onto the shaft with 5 t. Use Special Tool 9279 for this.

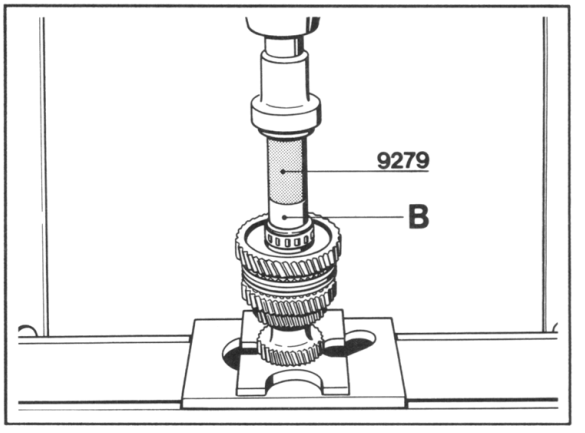

A = Special Tool 9279
B = Inner bearing race

169-35

Printed in Germany – II, 1989

Determining size of shim "s" for hollow shaft

1. Determine basic value "G":

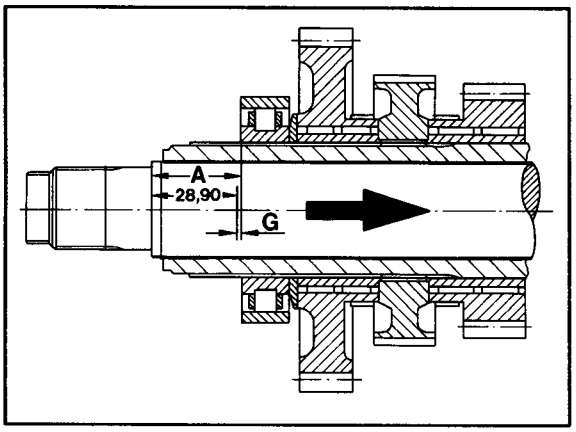

228 - 35

28.90 = Constant value
A = Measured value
G = Basic value

- Slide hollow shaft in direction of arrow to the stop (facing surface of hollow shaft level with outer race of four-point bearing).
- Measure distance between collar of output shaft and inner race of cylindrical-roller bearing (dimension "A").
- Measured value "A" minus constant value 28.90 mm = Basic value "G".

Example

Measured value "A"	30.13 mm
Constant value	- 28.90 mm
Basic value "G"	1.23 mm

2. Determine correction value "K":

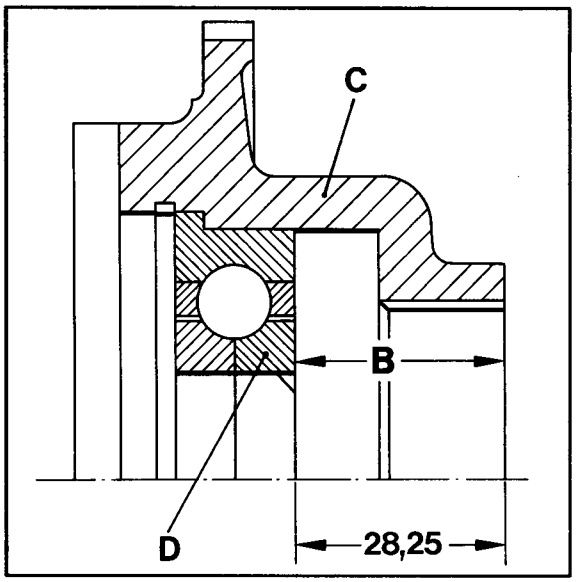

229 - 35

28.25 = Constant value
B = Measured value
C = Bearing carrier
D = Inner bearing race

- Measure distance between inner race and end of bearing carrier (dimension "B"). For this, insert four-point bearing with inner race into bearing carrier and hold in position with suitable pressing tool.

Printed in Germany – II, 1989

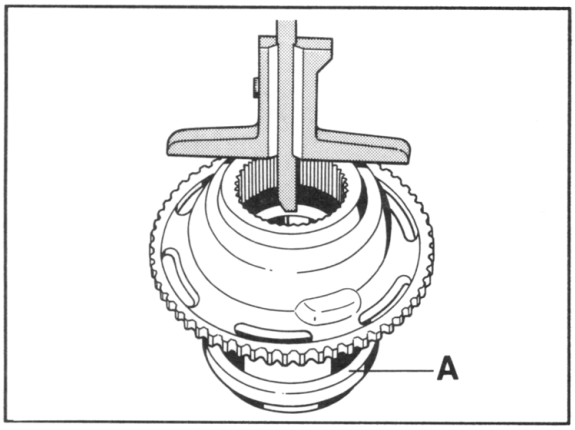

230 - 35

A = Pressure piece (e.g. VW 472/1)

- Deviations from the constant value 28.25 mm gives the correction value "K"".

Note

If the measured value "B" is less than 28.25 mm, the deviation must be added to basic value "G", if greater, the deviation must be subtracted from basic value "G".

3. Determine thickness of shim "s":

- Basic value "G", plus or minus correction value "K" gives the thickness of shim "s"

Example I

Basic value "G"	1.23 mm
Correction value "K"	+ 0.12 mm
Thickness of shim "s"	1.35 mm

Example II

Basic value "G"	1.20 mm
Correction value "K"	- 0.10 mm
Thickness of shim "s"	1.10 mm

Removing and installing limited slip differential

Tools

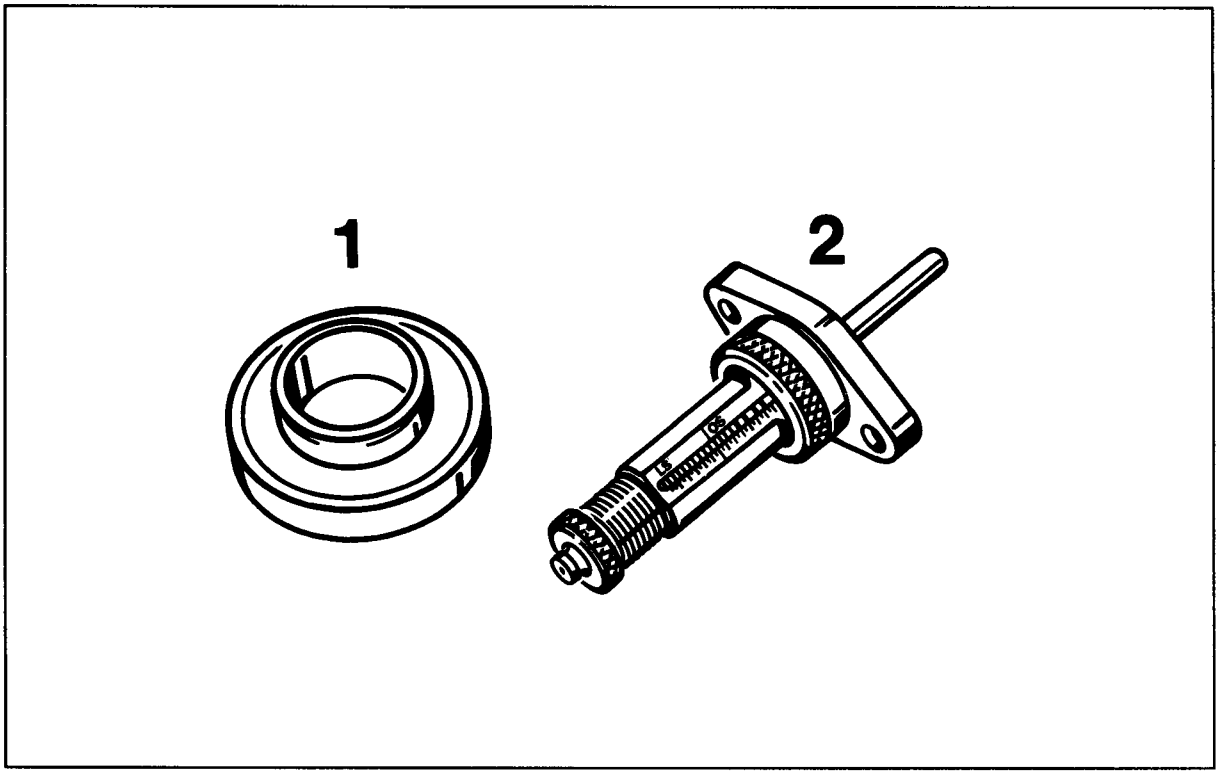

No.	Description	Special Tool	Order number	Remarks
1	Pressing	9252	000.721.925.20	
2	Measuring cylinder	9514	000.721.951.40	

Printed in Germany – X, 1990

Removing and installing limited slip differential

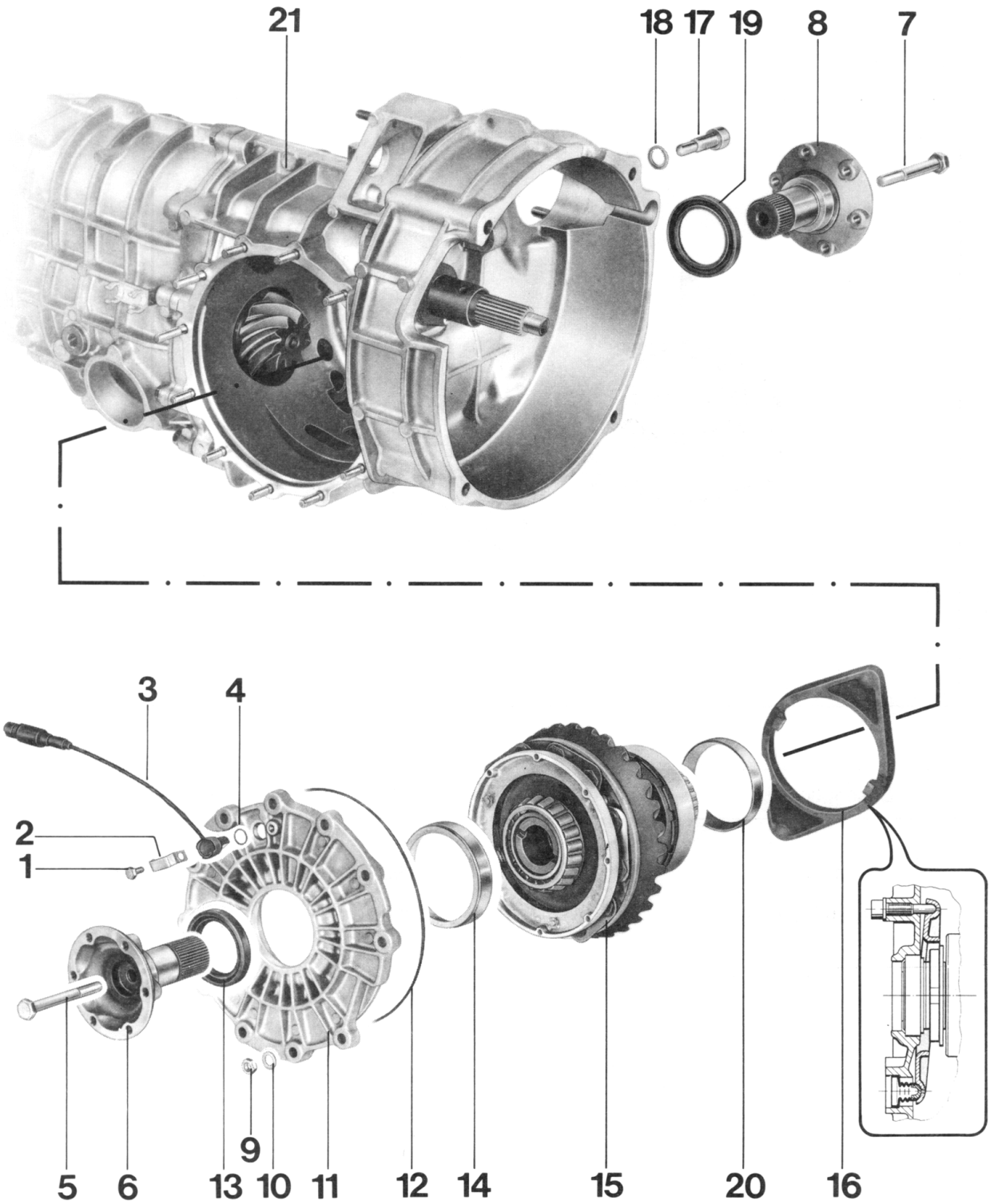

Printed in Germany – X, 1990

No.	Description	Qty.	Note when: Removing	Installing
1	Hexagon head screw*	1		Tighten with 10 Nm (7.5 ft.lb.)
2	Bracket*	1		
3	Reed contact*	1		
4	O-ring*	1		Replace, apply light film of oil
5	Hexagon head screw 10 x 90	1		Tighten with 44 Nm (32.5 ft.lb.)
6	Halfshaft flange, right	1		
7	Hexagon head screw 10 x 80	1		Tighten with 44 Nm (32.5 ft.lb.)
8	Halfshaft flange, left	1		
9	Hexagon nut	11		Tighten with 23 Nm (17 ft.lb.)
10	Washer	11		
11	Cover	1		
12	O-ring	1		Replace, apply light film of oil
13	Shaft seal	1		Pack area between sealing lips with grease (e.g. Olista Longtime 3EP). Press into position with pressing tool 9252
14	Outer bearing race	1	Heat transmission case up to approx. 120 °C (248 °F) and drive out with suitable mandrel	Heat transmission case up to approx. 120 °C (248 °F) and press in with suitable pressing tool
15	Differential with rear-axle lock	1		The recesses in the release bearing must engage into the driving cogs of the engaging fork
16	Engaging fork	1		Insert in correct position

* Deleted from 1991 model on

Printed in Germany – X, 1990

No.	Description	Qty.	Note when: Removing	Installing
17	Screw**	1		Tighten with 65 Nm (48 ft.lb.)
18	Disk	1		
19	Shaft seal	1		As seal No. 13
20	Outer bearing race	1	Heat transmission case up to approx. 120 °C (248 °F) and drive out with suitable mandrel	Heat up to approx. 120°C (248 °F) and press in with suitable pressing tool
21	Transmission case	1		

* Deleted from 1991 model on

** Adjustable from 1991 model on

Printed in Germany – X, 1990

Removing and installing contr. limited-slip differential (from 1991 model on)

Assembly instructions for removing and installing

Removing

Note

From the 1991 model on, the counter-bearing on the lateral limited-slip differential is adjustable.

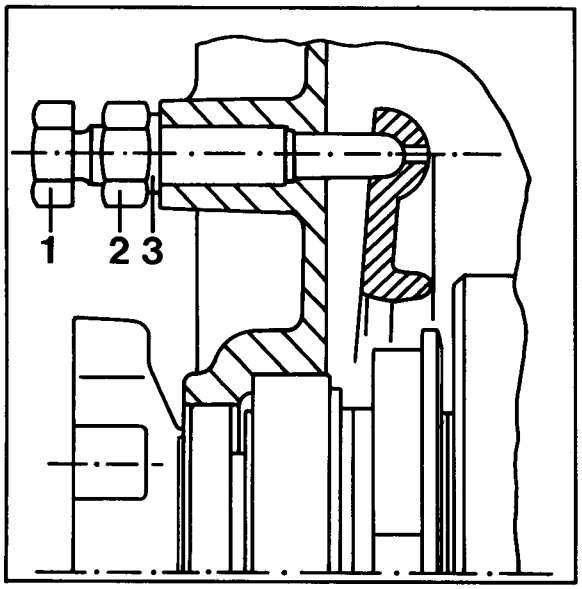

592-39

1 = Counter-bearing

2 = Hex nut (tightening torque 85 Nm (63 ftlb) / seal with Loctite 222)

3 = Sealing ring (omitted as of March 1991)

Note

Before removing the limited-slip differential, always check the amount of wear at the plates (see Vol. IV, Page D39/45 - 21). If plates are re-used after a period of operation, the position of the counter-bearing (No. 1) must not be altered. If repositioning or removal of the counter-bearing is unavoidable (for instance to rectify a leak), always measure the installed position of the counter-bearing before removing it, so that it can be installed again in the same position.

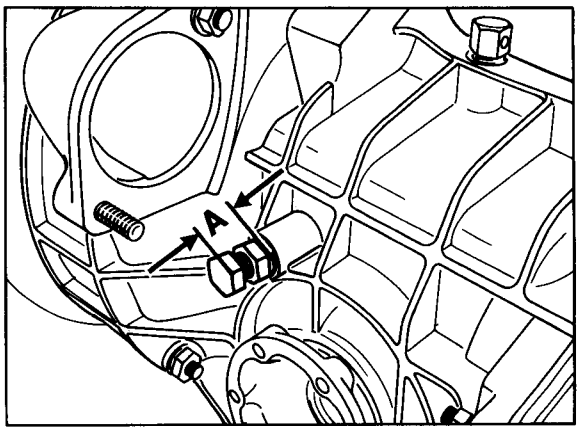

593-39

A = Installed position

Installing

Note

If the sealing gaiter is leaking, always renew the slave cylinder.

1. Adjusting the counter-bearing (only necessary if the plates have been renewed):

- The basic locking moment and the final drive set must be adjusted.

Printed in Germany – XI, 1991

- The flexible gaiter for the slave cylinder must be installed.

- Slacken off the measuring cylinder adjusting screw as far as possible (to make it easier to install the measuring cylinder).

- Install the measuring cylinder (special tool 9514) on the transmission and tighten the knurled nut.

- Adjust to a dimension of 31 mm (in the lateral locking (QS) range) with the adjusting screw on the measuring cylinder.

LS = Front-rear diff. lock measuring range

QS = Lateral differential lock measuring range

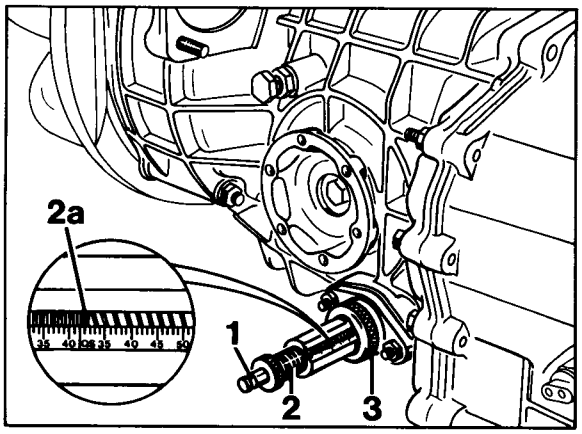

594-39

1 – Spacing plunger
2 – Adjusting screw
2a – Measuring groove on adjusting screw
3 – Knurled nut
4 – Counter-bearing
5 – Hex nut
6 – Sealing ring

- Screw in the counter-bearing until there is no more endplay at the measuring cylinder's spacing plunger.

Disassembling and assembling limited slip differential

Tools

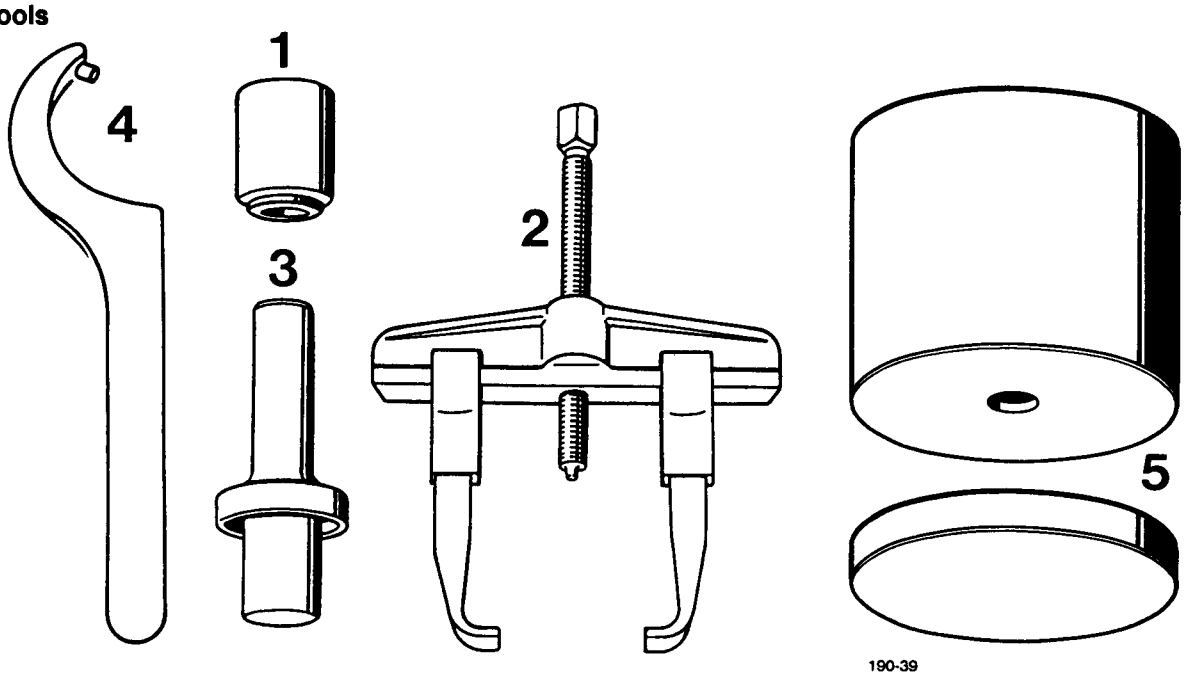

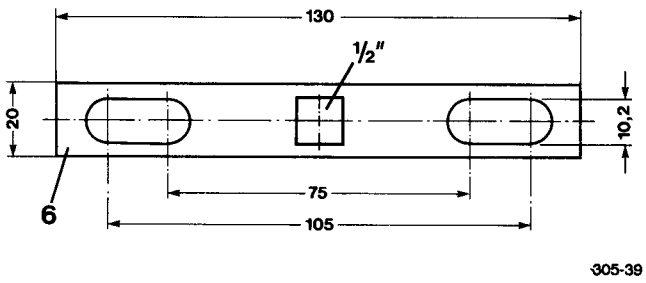

No.	Description	Special Tool	Order number	Remarks
1	Pressing tool	P 263	000.721.263.00	
2	Puller	-	-	standard
3	Pressing tool	P 264 b	000.721.264.20	
4	Hook wrench	-	-	standard
5	Measuring device	9508/1	000.721.950.81	2-part
6	Connector	-	-	Produced locally (flat steel 10 x 20)

Printed in Germany – III, 1989

Disassembling and assembling limited slip differential

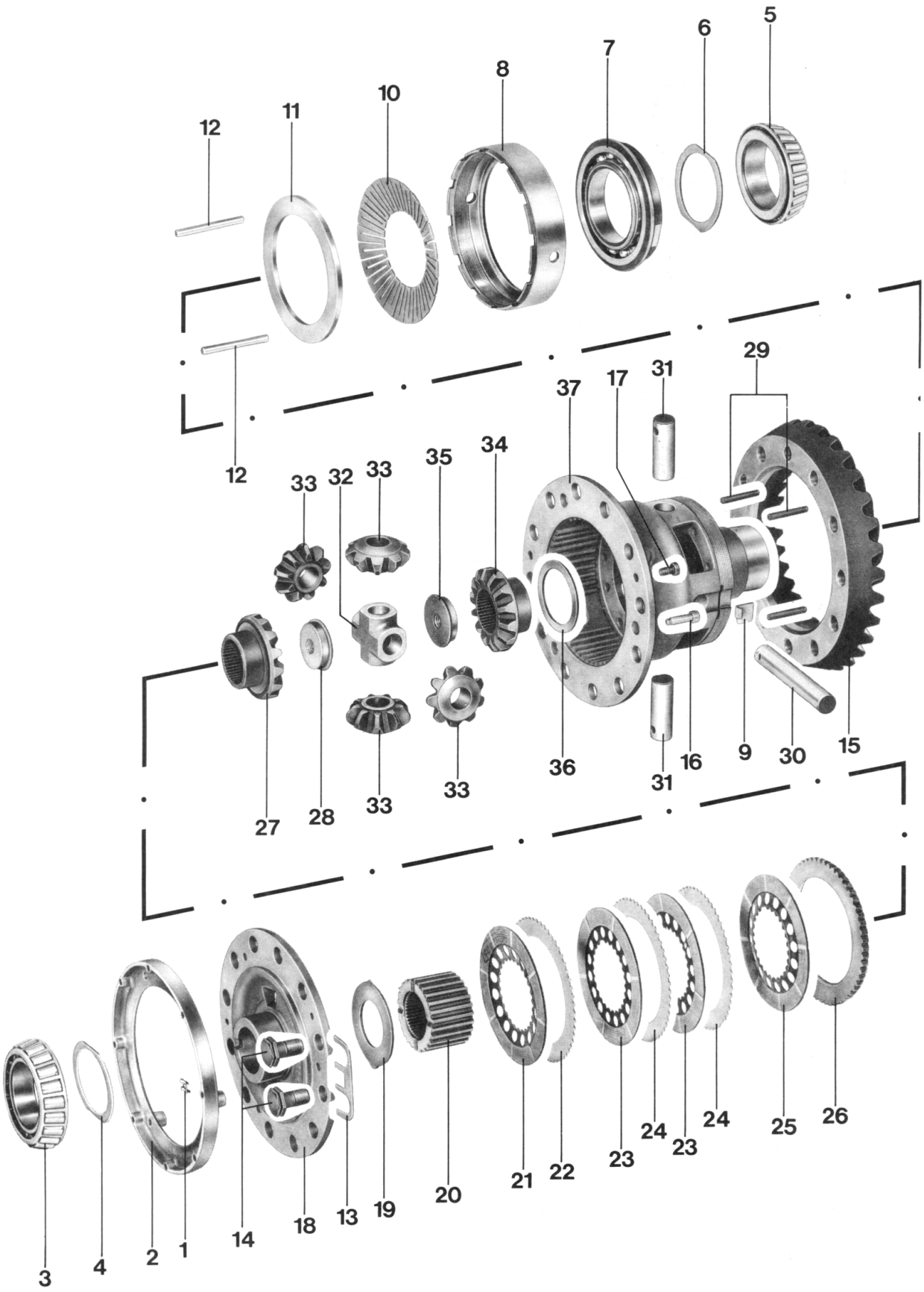

Printed in Germany – III, 1989

No.	Description	Qty.	Note when: Removing	Installing
1	Safeguard*	3		
2	Magnet-carrying disk*	1		
3	Taper roller bearing-outer race	1	Press out with two suitable levers	Press into position with suitable piece of tubing (e.g. VW 415)
4	Shim "S1"	X	Make a note of thickness for refitting	Determine thickness again if necessary
5	Tapered roller bearing-outer race	1	Remove with suitable puller and P 263	Press into position with Special Tool P 264 b
6	Shim "S2"	X	Make a note of thickness for refitting	Determine thickness again if necessary
7	Deep-groove ball-bearing	1		
8	Ring nut	1		Secure with tab washer
9	Tab washer	1		Replace
10	Lever spring	1		
11	Pressure ring	1		Flat side towards pressure pins
12	Pressure pin	8		Replace in sets only
13	Tab washer (omitted for Verbus-Ripp bolts)	6		Replace. Slide into the groove in the hexagon-head screw, pull together at front with pliers (to ensure that the tab washer is firmly linked to the hexagon head screw) and secure downwards via a hexagonal surface.
14	Hexagon head bolt (with tab washer)	12		Thread must be dry and free of grease. Tighten with 150 Nm (110 ftlb).

* omitted as of MY '91

Printed in Germany – XX, 1993

No.	Description	Qty.	Note when: Removing	Installing
–	Verbus-Ripp bolt (**without** tab washer)	12		Must always be replaced. Threads must be dry and grease-free. Tighten to 200 Nm (148 ftlb).
15	Ring gear	1		Heat up to approx. 120° C (248 °F), the threads of ring-gear screws must be dry and free of grease. Observe matched numbers. Adjust again if necessary.
16	Bolt*	3		
17	Screw	2		Tighten with 15 Nm (11 ftlb)
18	Cover	1		
19	Friction washer	X	Make a note of thickness for refitting	Determine again if necessary
20	Plate carrier	1		
21	Inner plate (bent)	1	Do not confuse with bent inner plate No. 25	Observe installation position, bent side points towards inside to block of plates
22	Adjusting plate	X	Make a note of thickness for refitting	Remeasure thickness if necessary
23	Inner plate	8		Observe installation position
24	Outer plate (1.3 mm thick	8		
25	Inner plate (cranked)	1	Do not confuse with cranked inner plate No. 21	Observe installation position, cranked side points inside towards block of plates
26	Pressure ring	1		Large, flat side points towards block of plates

* omitted as of MY '91

No.	Description	Qty.	Note when: Removing	Installing
27	Shaft bevel gear	1		Replace only as a set complete with bevel pinions
28	Threaded fitting	1		
29	Spring pin	3		
30	Bolt	1		
31	Bolt	2		
32	Cross fitting	1		
33	Bevel pinion	4		Replace only as a set complete with shaft bevel gears
34	Shaft bevel gear	1		Replace only as a set complete with bevel pinions
35	Threaded fitting	1		
36	Friction washer	X	Make a note of thickness for refitting	Remeasure thickness if necessary
37	Housing	1		

Note

As soon as the stocks of Gylon inner discs are exhausted, the limited-slip differential must be modified to accept Valeo inner discs when repairs are required. To do so, fit all inner and outer discs, cup spring and thrust ring and adjust pack thickness to specified value of 37.9 ± 0.1 mm (refer to p. 39 - 12a to 39 - 12d). Also mark the modified transmissions for identification (to highlight different wear limits) by stamping a large "V" into the transmission housing (below the lock cylinder). Also refer to Vol. IV, page D39/45-23.

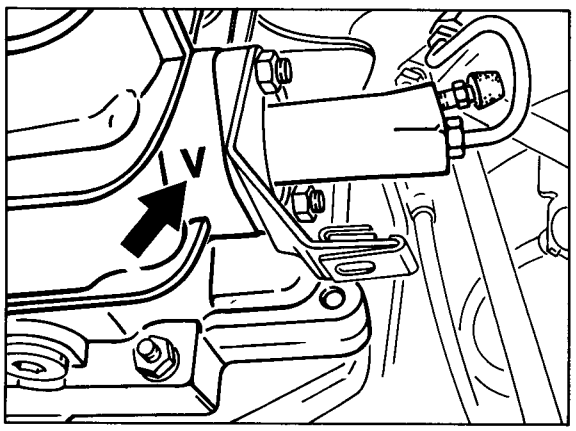

Printed in Germany – XX, 1993

Notes on assembly

Assembling

1. Determine axial play of differential bevel gears and adjust to 0.05...0.15 mm by inserting appropriate friction washers (A).

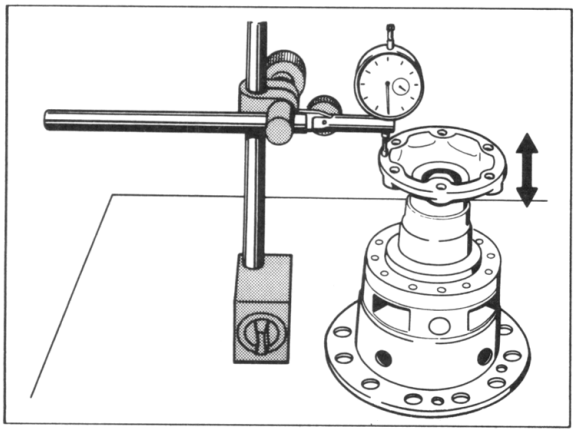

197-39

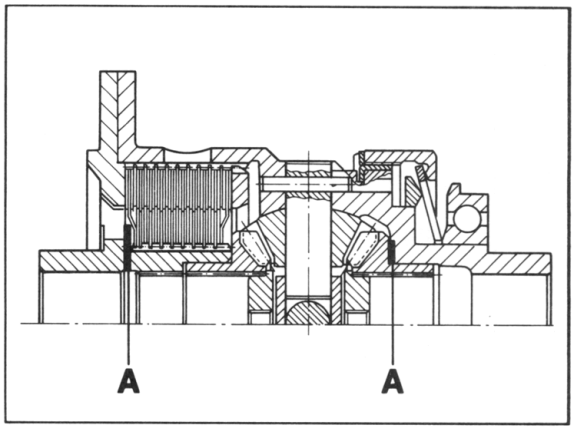

A = Friction washers

186-39

2. Drive in dowel pins for bevel-gear axles in correct position.

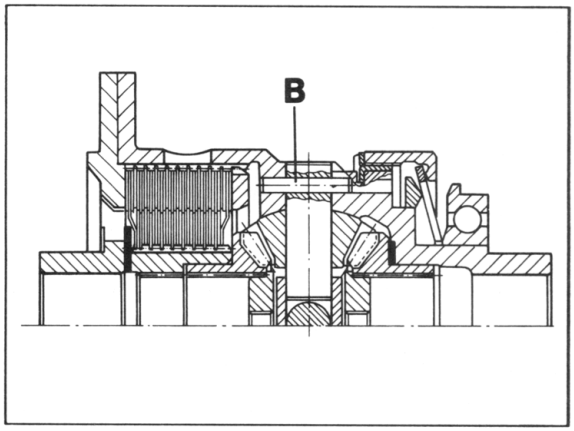

B = Dowel pin

186 - 39

Note

If components have been replaced (e.g. differential housing or bevel gears), the thinnest friction washers must be installed for measurement.

Printed in Germany – II, 1989

3. Determine thickness of block of plates:

- Block thickness (new) = 36.7 ± 0.1 mm
  Wear limit = 34.2 mm

- Measure complete block of plates (without pressure ring) with Special Tool 9508/1 and adjust to prescribed size with adjusting plate (No. 22) if necessary.

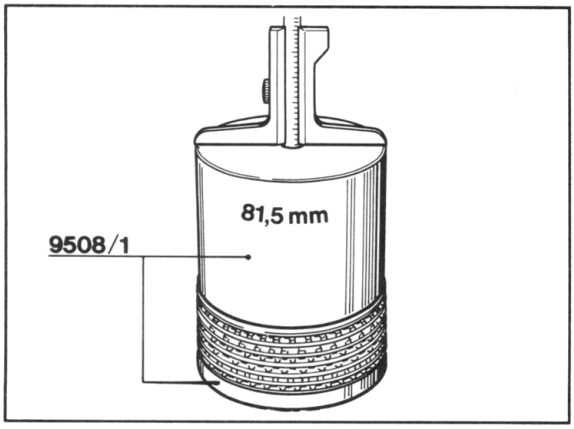

184 - 39

Example:

Measured value		117.80 mm
Height of special Tool*	-	81.50 mm
Thickness of block		36.30 mm

* Embossed on tool

- Adjusting plate must be selected which is 0.4 mm thicker.

4. Apply film of transmission oil to inner plate and assemble in such a way that the spiral groove for the oil supply runs clockwise from inside to outside when looking at the block of plates (direction of assembly) (refer to simplified sketch). Apart from this, the oil holes in the carrier sheet must be exactly in line with one another. Assembly is easier if a tooth is missing from the carrier plate.

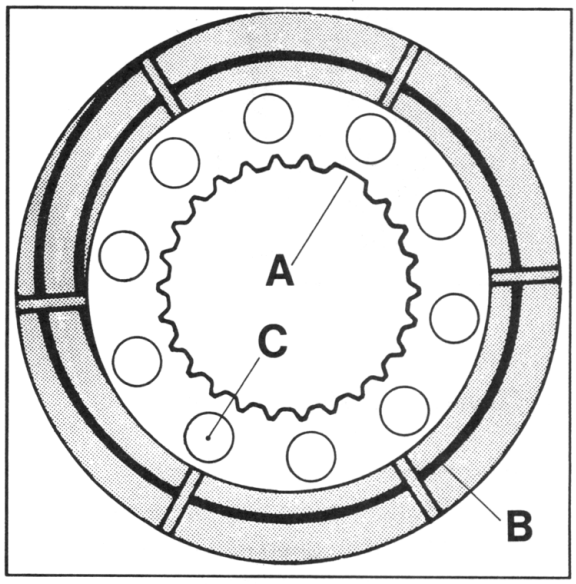

207-39

A = Missing tooth
B = Spiral groove
C = Oil hole

5. Adjust basic locking moment:

- Differential lock completely assembled (with deep-groove ball-bearing and tapered-roller bearing - inner races)

Printed in Germany – III, 1989

- Measure breakaway torque with one bevel gear held fast and one driven. For this, clamp a flange with two screws into the vice and measure the torque at the other flange.

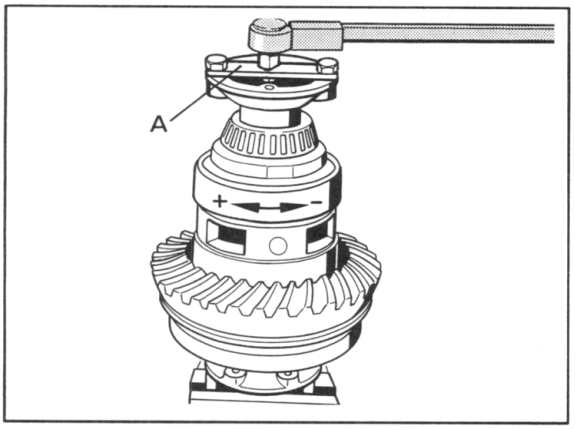

213-39

A = Connector (produced locally)

- Adjust breakaway torque with hook wrench by turning the ring nut to 100 Nm (73.75 ft.lb.), then undo ring nut as far as the safety groove at which the breakaway torque is less than 20 Nm (15 ft.lb.).

- Secure ring nut with tab washer

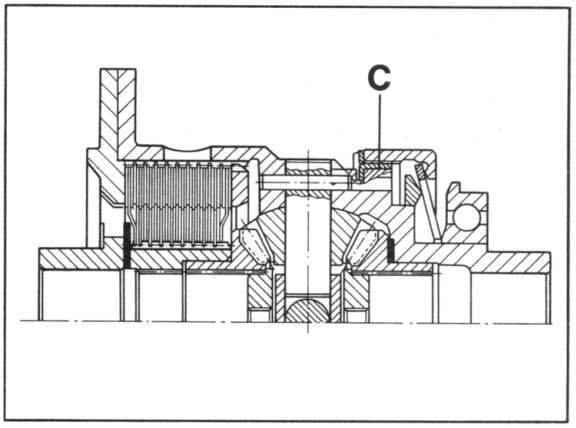

C = Tab washer

186 - 39

Printed in Germany – III, 1989

Dismantling and assembling limited slip differential with Valeo friction linings

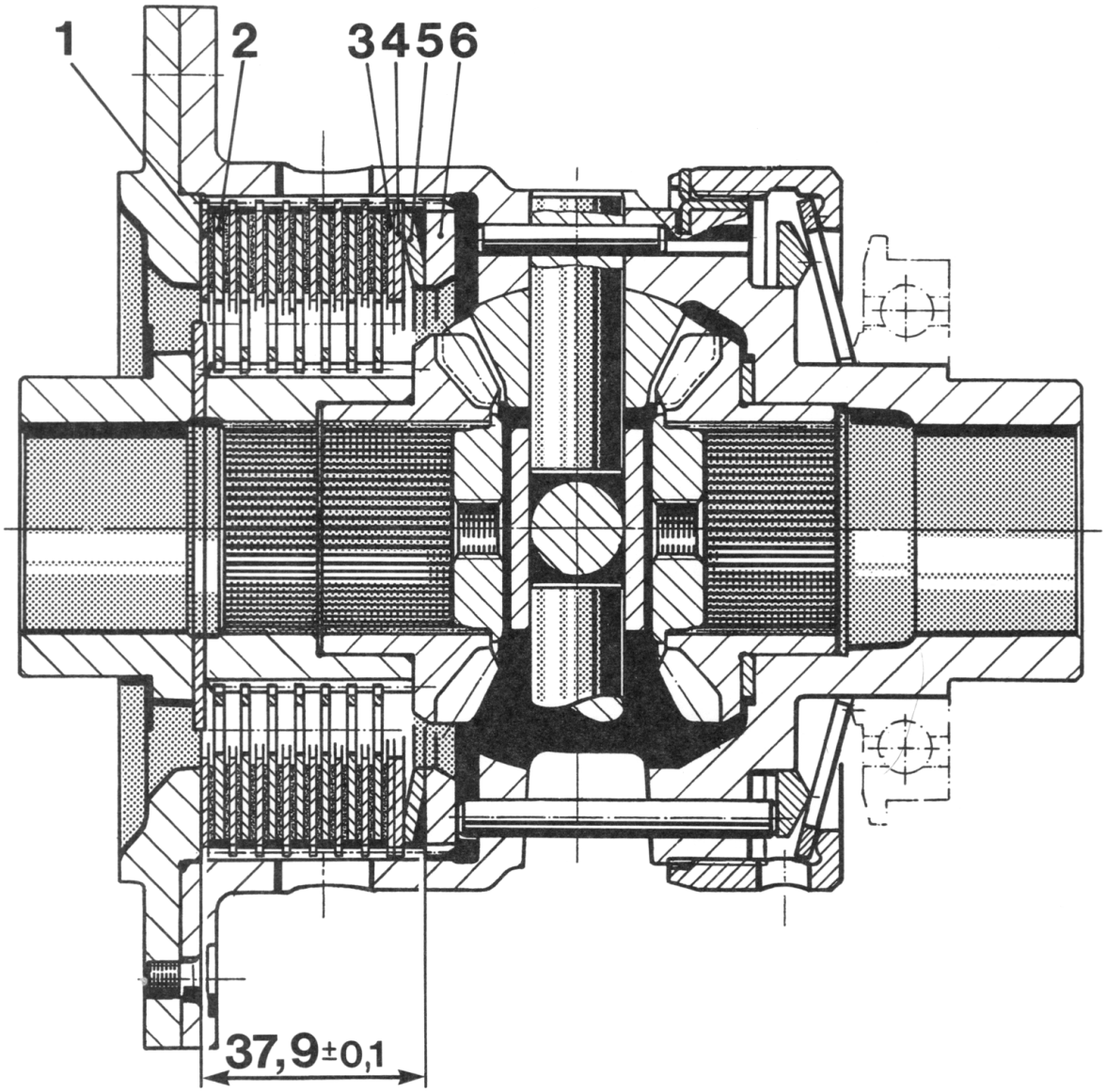

Printed in Germany – XVIII, 1992

No.	Designation	Qty.	Note: Removal	Installation
1	Outer disc, 1.2 mm thick	7		
2	Inner disc with Valeo lining	7		
3	Outer disc (adjusting disc)	1	Mark for reinstallation. Must be refitted in the same place	
4	Outer disc (adjusting disc)	1	Mark for reinstallation. Must be refitted in the same place.	Minimum thickness must be 1.5 mm
5	Cup spring	1		Observe installation position
6	Thrust ring	1		Observe installation position

Printed in Germany – XVIII, 1992

Dismantling and assembly notes

Note

Following the change of the inner discs from Gylon to Valeo, stacking, adjustment and wear limit specifications of the disc pack have been modified (also refer to page D 39/45-23).

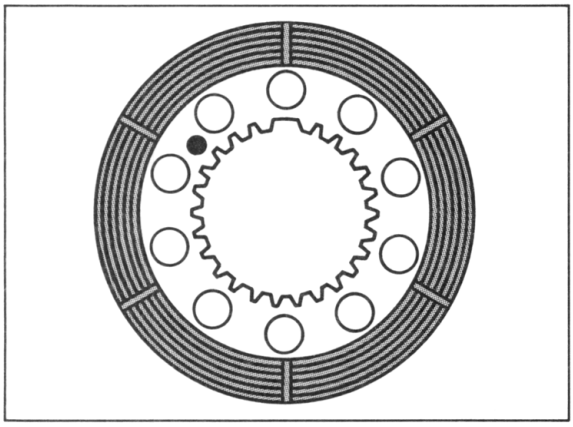

Former Gylon disc 288-39

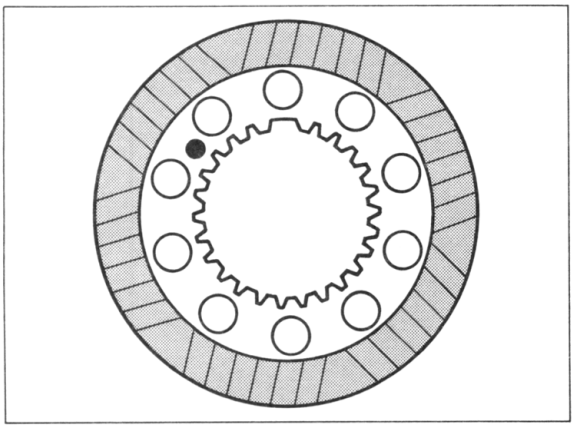

New Valeo disc 1311-39

1. Determine thickness of disc pack.

- Pack thickness (new) = 37.9 ±0.1 mm
  Wear limit = 36.5 mm

- Measure entire disc pack with cup spring (but without thrust ring).

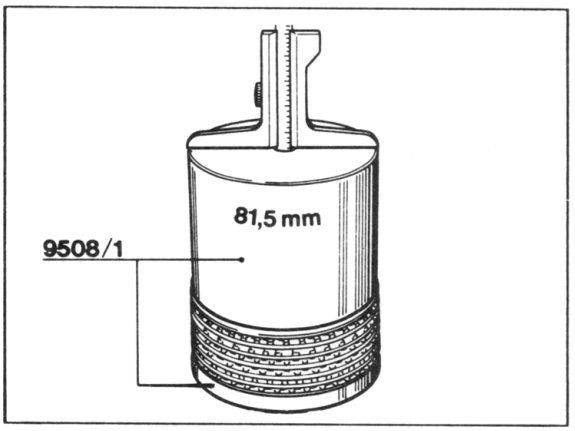

184-39

Example

Measurement	= 117.90 mm
Special Tool height*	= 81.50 mm
Pack thickness	36.40 mm

* Engraved on tool

Note

If the wear limit has been reached, all inner discs must be replaced and the disc pack must be packed with the outer discs towards the cup spring to give a pack thickness of 37.9 ±0.1 mm.
A maximum of two outer discs may be fitted at the cup spring. The outer disc in contact with the cup spring must have a minimum thickness of 1.5 mm.

2. Coat discs with transmission oil before fitting them.

3. Oil bores in carrier plate of inner discs must line up exactly.

Printed in Germany – XVIII, 1992

Adjust drive set (rear-axle drive)

Tools

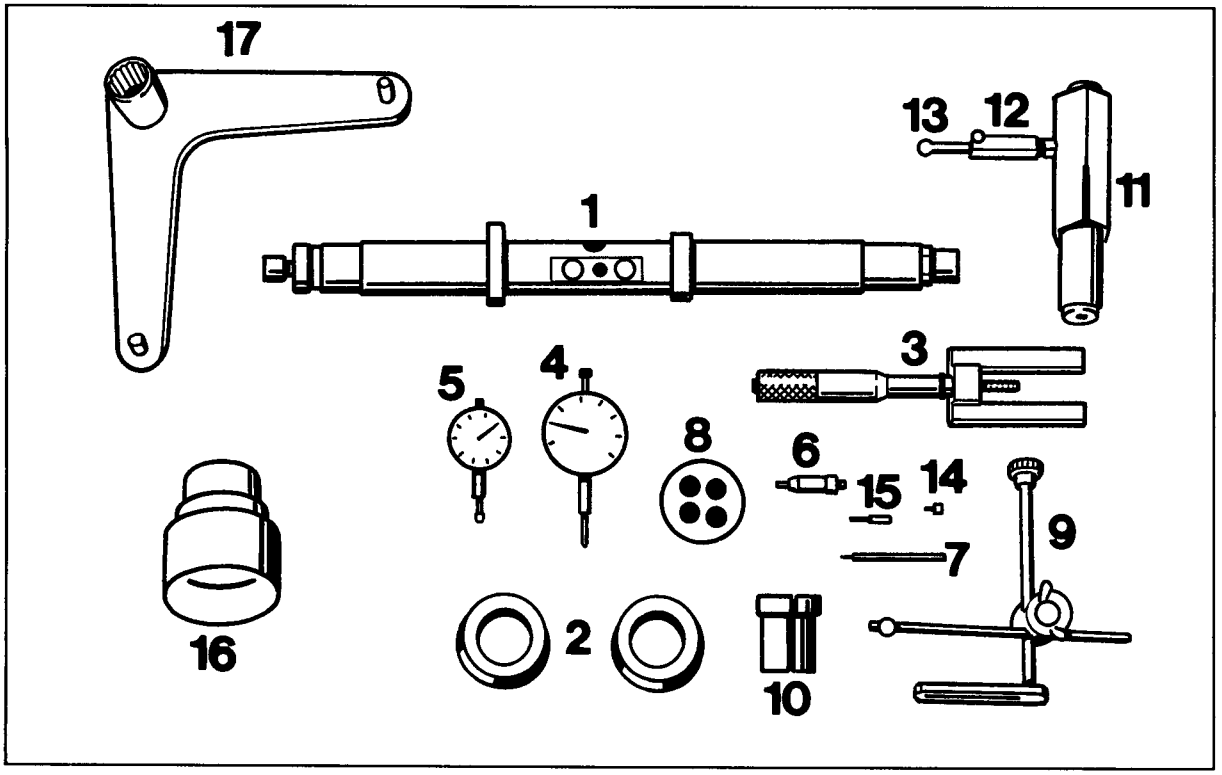

214-39

Printed in Germany – II, 1989

Adjust drive set (rear-axle drive)

Tools

No.	Description	Special Tools	Order number	Remarks
1	Measuring mandrel	VW 385/1		
2	Centering disks	9109	000.721.910.90	
3	Universal gauge	VW 385/30		
4	Dial gauge	-		standard
5	Dial gauge	-		standard, measuringrange 3mm
6	Plunger	VW 385/14		
7	Dial gauge extension	VW 385/56		30 mm long
8	Final measuring plate	9281	000.721.928.10	
9	Dial-gauge bracket	VW 387		
10	Clamping sleeve	9145	000.721.914.50	
11	Adjusting device	VW 521/4		
12	Measuring lever	VW 388		
13	Plunger	VW 388		
14	Dial-gauge extension	VW 382/10		6.0 mm long
15	Dial-gauge extension	VW 385/15		9.3 mm long
16	Assembly sleeve	9283	000.721.928.30	
17	Holding device	9253	000.721.925.30	

Printed in Germany – II, 1989

Practical procedure when readjusting the drive set

If it is necessary to adjust drive pinion and ring gear, following this sequence will ensure an efficient working procedure:

1. Determine the total thickness of shims "S_{tot} (S_1 plus S_2). For the specified pretension on tapered roller bearing/differential.

2. Determine the thickness of shim "S_3".

3. Split the total thickness "Stot" into S_1 and S_2 so that the specified circumferential backlash is given between ring gear and drive pinion.

The aim of this adjustment is to restore the smoothest running position which can be achieved on test equipment in the production line.

Greatest possible cleanliness when performing all assembly work and measuring procedures are pre-requisites for a correct result.

When carrying out assembly work on the final drive assembly, it is only necessary to readjust drive pinion and ring gear or drive set if components have been replaced which have a direct influence on the adjustment. Refer to the following table to avoid unnecessary adjustment work.

Adjust: / Replaced component	Ring gear (S_1 + S_2)	Drive pinion (S_3)
Transmission case	x	x
Side transmission cover	x	
Large cylindrical-roller bearing and four-point bearing for drive pinion	x	x
Drive set	x	x
Differential housing	x	
Tapered roller bearing for differential	X	

Printed in Germany – II, 1989

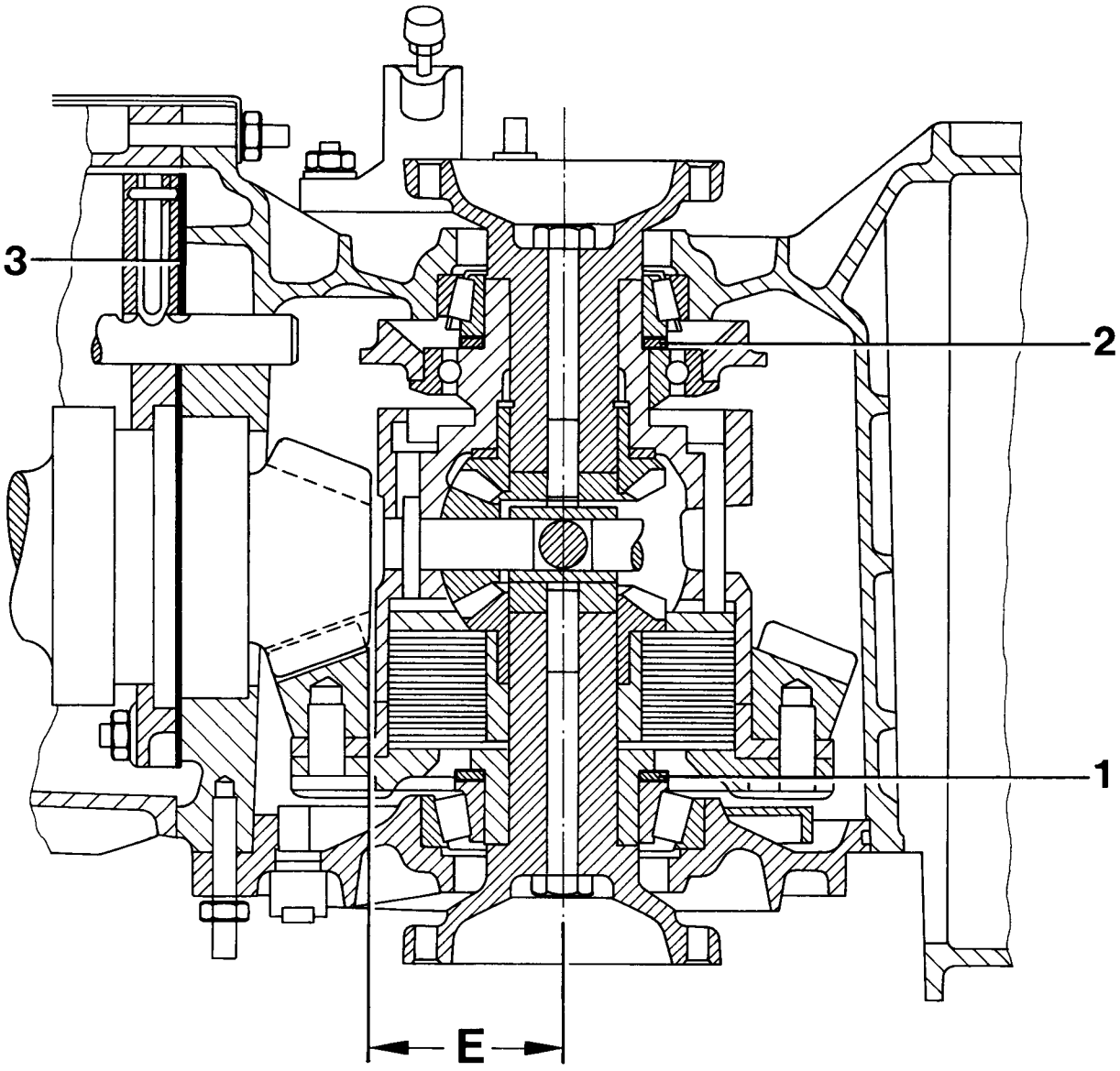

1 – Shim S_1
2 – Shim S_2
3 – Shim S_3
E – Adjustment dimension

Correct results may only be achieved if assembly work and measuring procedures are carried out conscientiously observing cleanliness.

Printed in Germany – II, 1989

Adjusting drive set (rear-axle drive)

General

The setting of drive pinion and ring gear is a determining factor for the service life and smooth running of the rear-axle drive. Drive pinions and ring gears were therefore matched during production which have been checked for good surface appearance and low noise in both directions of rotation on special test equipment. The position at which smoothest running can be achieved is determined by shifting the drive pinion axially, whereby the ring gear is kept within the tolerance of the prescribed tooth-flank backlash. Deviation "r" from the specified design dimension "Ro" is measured, added to design dimension "Ro" and embossed on the ring gear as setting value "E".

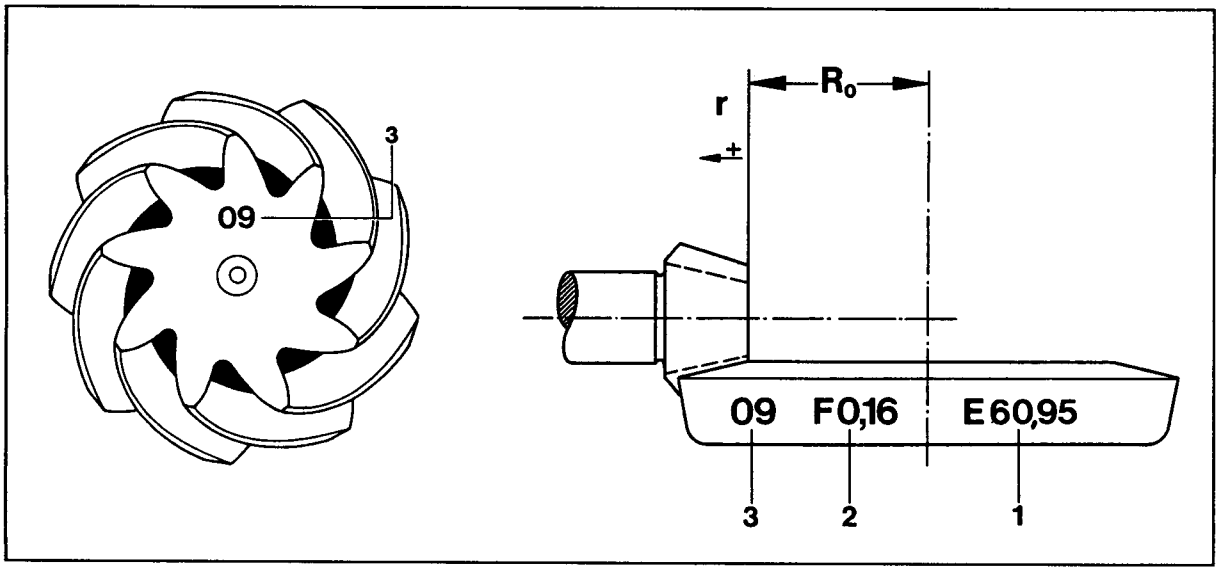

215-39

- R_o = Design dimension
  r = Deviation r
  1 = Adjustment dimension (Ro + r), e.g. E 60.95
  2 = Flank backlash, e.g. F 0.16
  3 = Matching number

Adjust drive pinion (rear-axle drive)

Note

The setting dimension "E" is given on the ring gear.

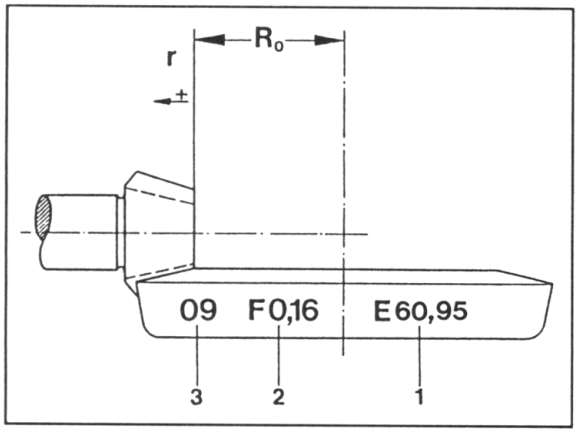

217-39

1 = Setting dimension "E"

1. Install complete gear set without "S_3" shims and tighten all hexagon nuts for tensioning plate with 23 Nm (17 ft.lb.).

2. Set adjusting ring of measuring mandrel VW 385/1 to dimension "a".

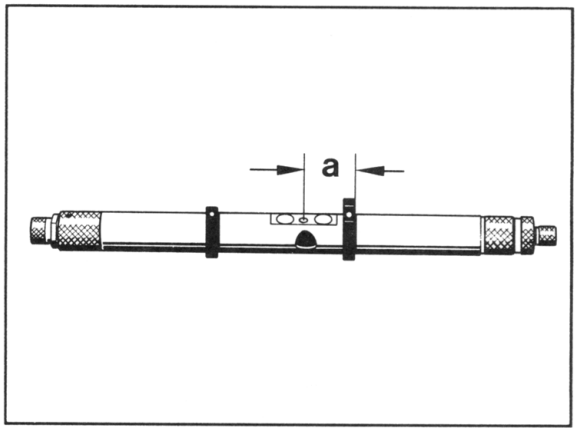

223-39

a = approx. 65 mm

3. Assemble measuring mandrel with centering disk 9109, tapered-roller bearings, plunger VW 385/14 and dial-gauge extension VW 385/15.

4. Set measuring mandrel with adjuster 385/30 to adjusting dimension (60.95 mm in the example). Set dial gauge (3 mm measuring range) to 0 with 1 mm pretension.

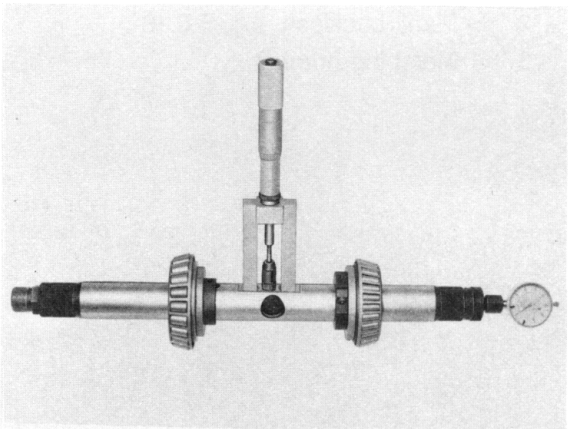

5. Block input shaft with Special Tool 9253, select 4th gear and screw Special Tool 9283 onto hollow shaft hand tight.

6. Apply final dimension plate 9281 to drive pinion head and insert measuring mandrel into transmission case. Dial-gauge extension located in the area of the final dimension plate.

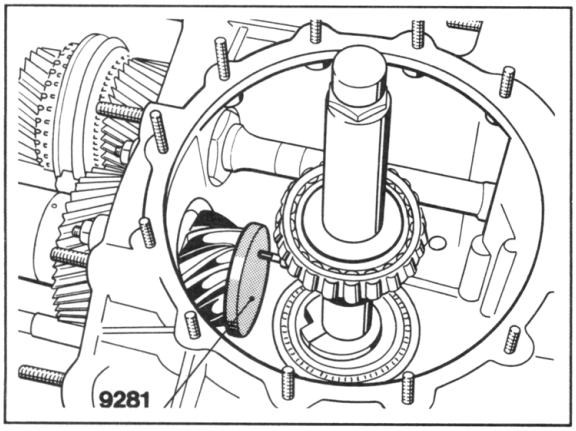

185 - 39

7. Fit side transmission cover without O-ring and fasten cross-wise with 4 nuts.

Note

Do not use a hammer when fitting the side transmission cover (the magnet- fitted final dimension plate may fall). Settle cover in installation position by tightening the nuts uniformly.

8. Pull second centering disk with spindle towards the outside until the measuring mandrel can still just be turned by hand.

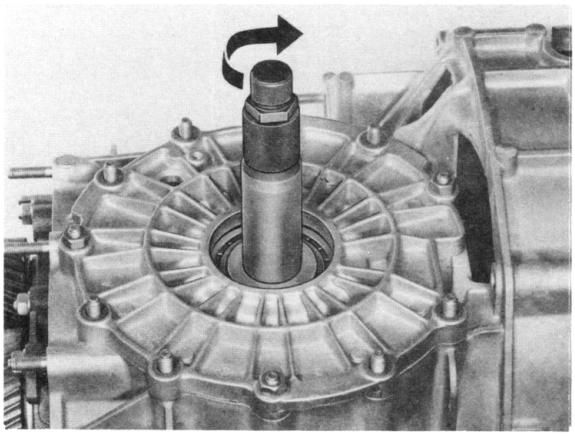

9. Turn measuring mandrel carefully until the dial-gauge extension is vertical to the facing edge of the drive-pinion head. At this point, the pointer of the dial gauge reaches max. deflection (reverse point), and the dial gauge must be read.

Note

The measured value always deviates from the set dimension clockwise (the smaller pointer on the dial gauge is between 1 and 2), i.e. if the dial gauge is set with 1 mm preload, the value deviating from 1 is taken as shim thickness "S_3".

Example:

If the small pointer on the dial gauge indicates between 1 and 2 and the large pointer indicates 0.37 mm, then take 0.37 mm as being the shim thickness (with 1 mm gauge preload). Always round up or down to the nearest 0.05 mm. (e.g. 0.37 mm to 0.35 mm).

10. After providing the necessary shims, check setting value "E" again.
A deviation ± 0.03 mm is permissible.

Printed in Germany – II, 1989

Adjusting ring gear (rear-axle drive)

Determine total shim thickness "S tot." (S_1 + S_2).

The ring gear must be adjusted if the transmission case,

side transmission cover,
tapered-roller bearing for differential,
differential housing or drive
set have been replaced.

Note

The drive pinion must be removed to determine the preload of tapered-roller bearing on the differential.

1. Make sure that the outer bearing races of the tapered roller bearings are well seated in the transmission case or side transmission cover.

2. Fit one spacer ring, 2.5 mm thick, on the ring gear side and opposite side of the differential to be used.

3. Insert differential into transmission case and crank several times.

4. Fit side transmission cover without seal and tighten all hexagon nuts with 23 Nm (17 ft.lb.).

5. Lay final dimension plate VW 385/17 on the collar of the differential.

6. Fasten universal dial-gauge holder VW 387 with dial gauge and extension to the case and set to 0 with 2 mm preload.

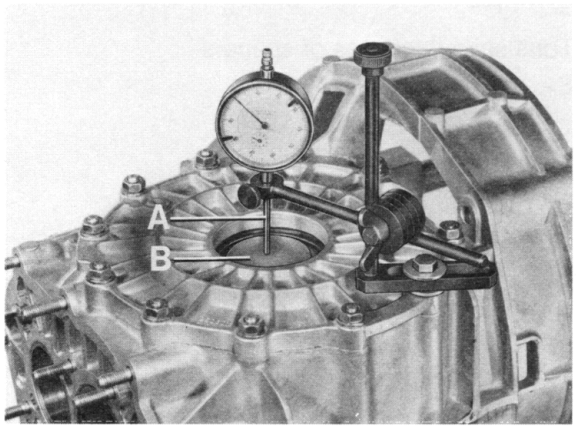

A = Dial-gauge extension (approx. 30...40 mm long)

B = Final dimension plate VW 385/17

7. Move differential up and down. Read off backlash on the dial gauge and note.

Note

Do not turn differential while measuring backlash as this will falsify the measuring result.

8. Calculate "S tot."
   "S"tot." = Fitted shim thickness
   + measured value
   + pressure of the tapered-roller bearing

Example

Shim thickness provided	5.00 mm
Measured value	0.75 mm
Pressing (constant value)	0.40 mm
"S tot."	6.15 mm

Printed in Germany – II, 1989

9. Remove differential, pull off both tapered roller bearings and split calculated shim thickness "S tot." as follows.
   Select spacer S_1 0.70 mm thinner and S_2 0.7 mm thicker as a starting point for subsequent adjustment of the flank backlash.

Example

Total shim thickness of spacers
$S_1 + S_2 = 6.15$ mm

Thickness of spacer S_1

$$\frac{6.15 \text{ mm}}{2} = 3{,}075 \text{ mm}$$
$$- 0{,}700 \text{ mm}$$
$$= 2{,}375 \text{ mm}$$

Thickness of spacer S_2

$$\frac{6.15 \text{ mm}}{2} = 3{,}075 \text{ mm}$$
$$+ 0{,}700 \text{ mm}$$
$$= 3{,}775 \text{ mm}$$

Note

Spacers are available in thickness 1.6...3.1 mm in increments of 0.10 mm.

A 0.25 mm thick shim makes it possible to graduate shim thicknesses in increments of 0.05 mm.

The calculated shim thicknesses must be rounded up or down for plausible dimensions, so that the total thickness S_1 and S_2 does not alter.

Example:

Calculated thickness

$S_1 + S_2 = 2.375 + 3.775 = 6.15$ mm

Rounded off thicknesses

$S_1 + S_2 = 2.35 + 3.80 = 6.15$ mm

Measure shims with a micrometer in several places. Permissible deviation 0.02 mm. Also check shims for burrs and damage.

Printed in Germany – II, 1989

Adjust circumferential backlash (rear-axle drive)

Note

The backlash to be set is embossed on the ring gear.

1. Mount gear set using shims "S_3" determined while adjusting the drive pinion.

2. Insert differential with tapered roller bearing and shims (S_1 + S_2) into the housing.

3. Fit side transmission cover and tighten all hexagon nuts with 23 Nm (17 ft.lb.).

Note

Always make sure that there is a certain amount of flank backlash when tightening the nuts. Never allow the drive pinion to seize.

4. Assemble measuring lever VW 388 and adjusting device VW 521/4 and adjust lever length to 80 mm with the plunger. Refer to dimension "a" in the picture.

5. Insert adjusting device with clamping sleeve (Special Tool 9145) into the differential and clamp firmly.

6. Crank differential in both directions several times to settle the tapered roller bearing.

7. Screw Special Tool 9283 (without shim "S") onto the hollow shaft **hand tight**.

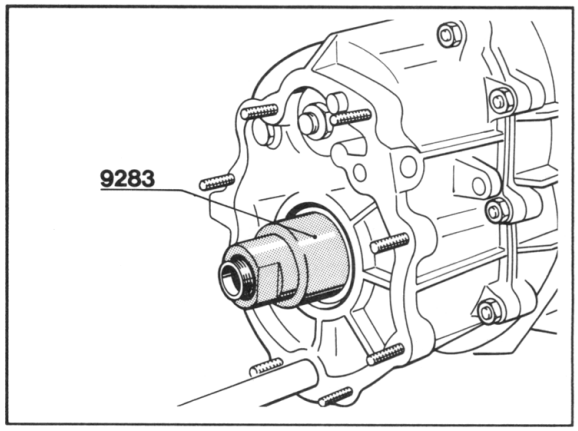

231-39

8. Fit universal dial-gauge holder with flat extension in such a way as to produce a right angle between dial-gauge axis and lever.

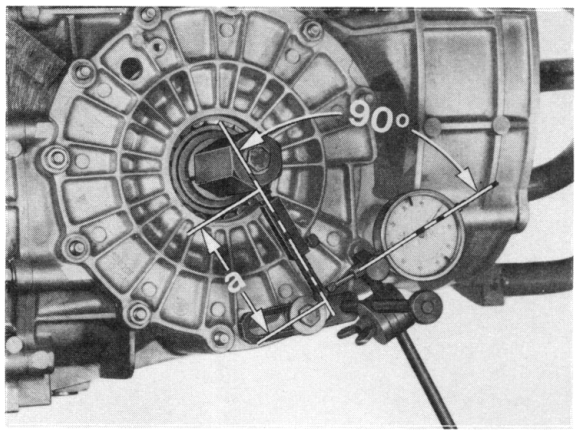

86/837

Dimension "a" = approx. 80 mm

9. Turn ring gear carefully at the clamping screw of the adjusting device as far as the stop and set the dial gauge to 0. Turn back ring gear and read off circumferential backlash. Make a note of the value.

10. After turning the ring gear a further 90°, repeat measuring procedure three times. The measured values must not deviate from one another by more than 0.05 mm.

Note

The backlash to be adjusted is embossed on the ring gear. The actual value may be less than the specified value by 0.05 mm. Under no circumstances may the backlash be greater than the specified value.

11. If it is not possible to obtain the prescribed flank play, replace spacers (S_1 + S_2) again. The total shim thickness ($S_{tot.}$) must not alter however.

Printed in Germany – II, 1989

Removing and installing front-axle final drive

Removing

1. Raise vehicle at jacking points.

2. Remove floor panel from pedal assembly.

3. Remove both universal-joint clamping screws between steering gear and steering shaft and pull joint upwards.

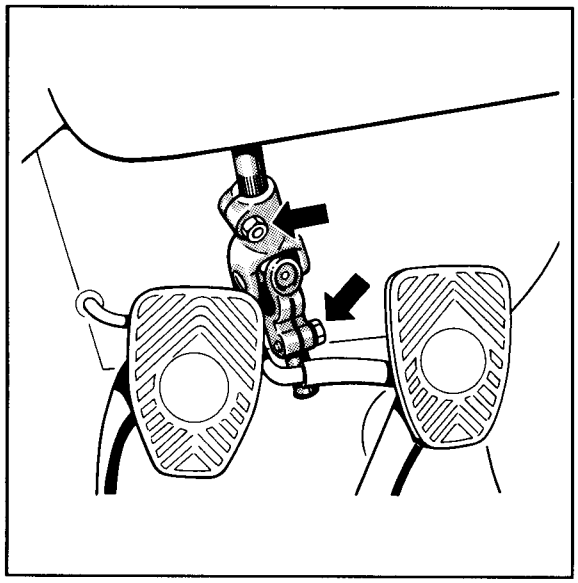

244-39

4. Remove front and middle floor panels.

5. Remove retaining clamp from power-steering lines.

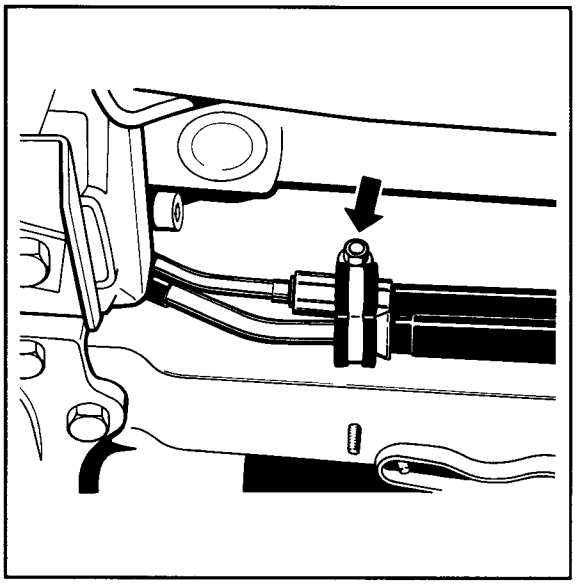

245-39

6. Unclip power-steering lines from holder.

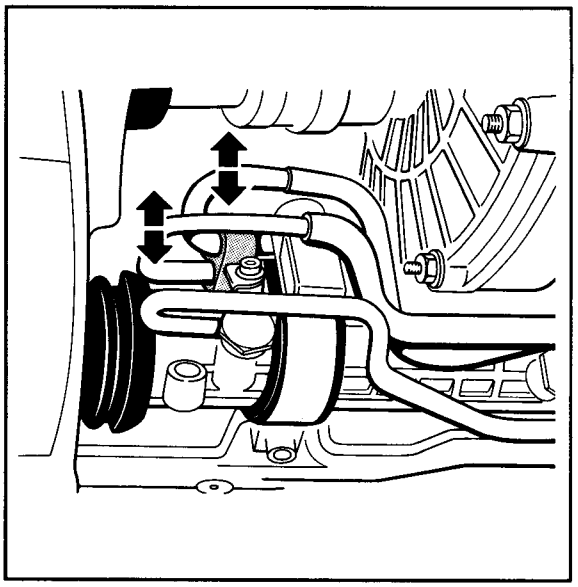

246-39

Printed in Germany – II,1989

7. Undo transmission-bearing screw.

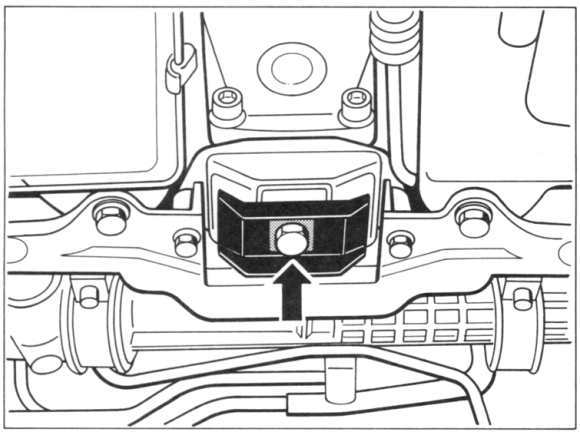

247-39

8. Undo hexagon head screws from front-axle cross members and side members and drop front axle.

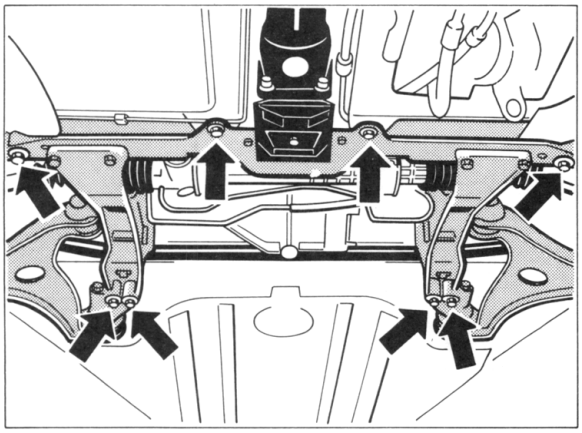

248-39

9. Remove stabilizer.

10. Undo drive shaft at flange from front-axle final drive.

11. Undo Allen screw from front central-shaft clamping sleeve and slide clamping sleeve along central shaft to the rear.

12. Undo upper fastening screws for central tube - front-axle final drive - by pressing central pipe to one side with a suitable tool. (Do not damage lines).

13. Position gearbox lever underneath, undo central pipe fastening screws and remove transmission.

Installing

1. The rubber seal (arrow) must be replaced on the facing surface of the central shaft before installing the front-axle final drive. Apply glycerine to sealing disk before assembly. Tightening torque for hexagon head screws (M 6 x 12) 10 Nm (7.5 ft.lb.)

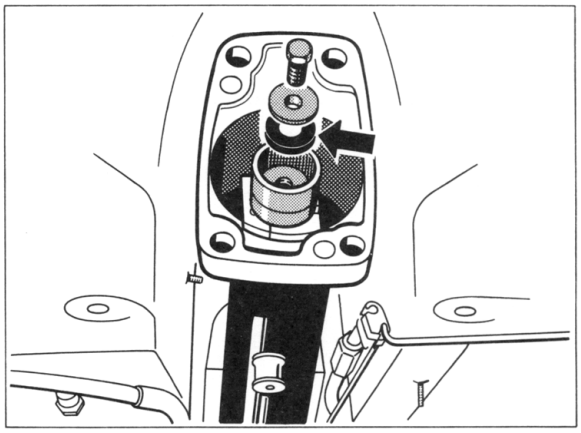

348-39

Printed in Germany – II,1989

2. Check transmission oil and fill up if necess.

3. Clip lines into holder.

4. Align front axle.

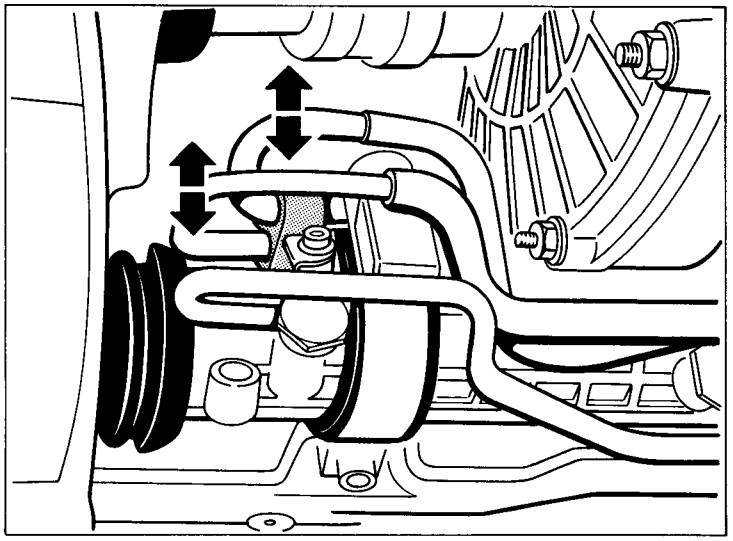

246-39

Tightening torques: Removing and installing front-axle final drive

Location	Thread	Tightening torque Nm (ft.lb.)
Rubber sealing disk (in area of clamping sleeve)	M 6	10 (7.5)
Central pipe to transmission	M 12	85 (62.5)
Clamping sleeve to central shaft	M 10	75 (55)
Drive shaft to transmission	M 8	42 (31)
Stabilizer to side member	M 8	23 (17)
Stabilizer to stabilizer mounting	M 10	46 (34)
Cross member to chassis outside inside	 M 12 M 10	 85 (62.5) 46 (34)
Trailing arm to chassis (front)	M 12	85 (62.5)
Universal joint to steering gear and steering shaft	M 8	23 (17)
Wheel to hub	M 14	130 (96)

Printed in Germany – II,1989

Removing and installing central pipe

1. Remove front-axle final drive, refer to Page 39 - 25.

2. Remove transmission shield.

3. Pull rubber boot forward over gearshift rod coupling and undo fit bolt.

4. Undo both Allen screws from clamping sleeve and slide sleeve along central shaft to the front.

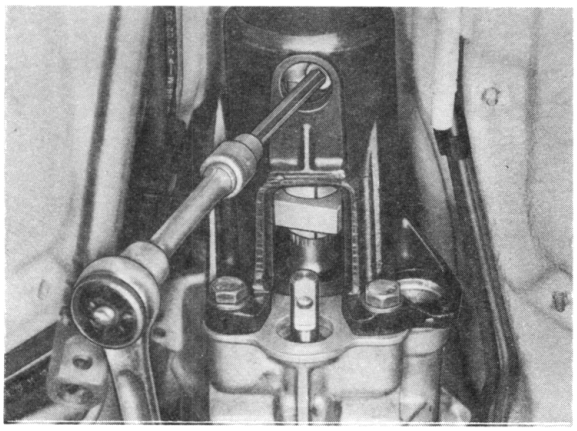

88/535

5. Undo Allen screws from interaxle-lock slave cylinder and remove safeguard. Do not undo line.

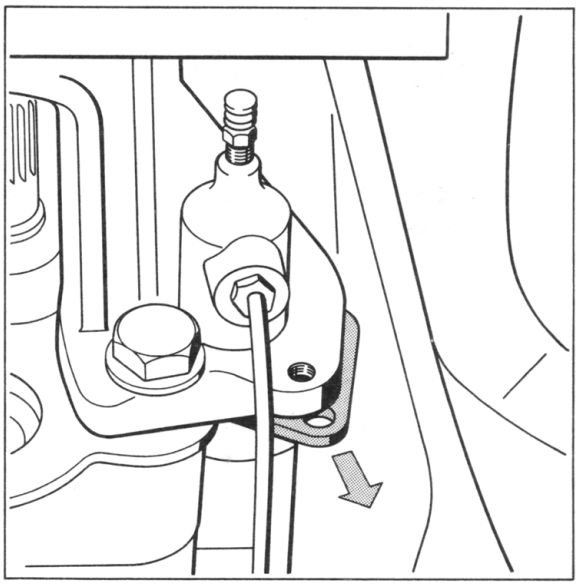

148/10

6. Unclip connection line to transmission and suspend interaxle cylinder with connected line on one side.

7. Unclip control cable for throttle flap on deflection lever of pedal box and remove bolt pin.

8. Remove lever knob from gear lever.

Printed in Germany – II,1989

9. Undo upper fastening screws from transmission central pipe; for this, remove rear shelf from central console. Remove PVC layer and take off cover.

Note

The cover can also be pushed out from below.

Illustration shows cutout without console

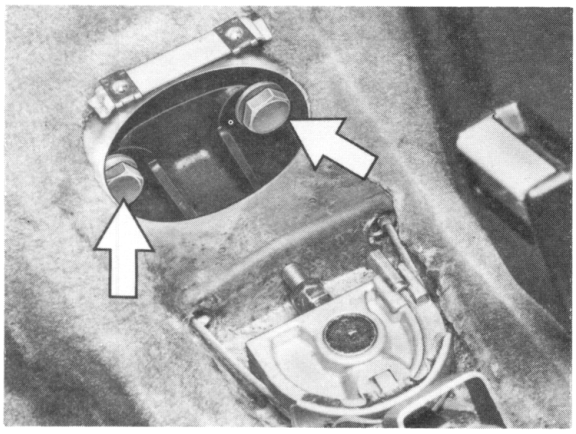

88-511

10. Pull throttle-flap withdrawal cable out of guide tube for floor group.

11. Fit own-construction tool - flat iron - front and rear. (To support central pipe when disconnecting).

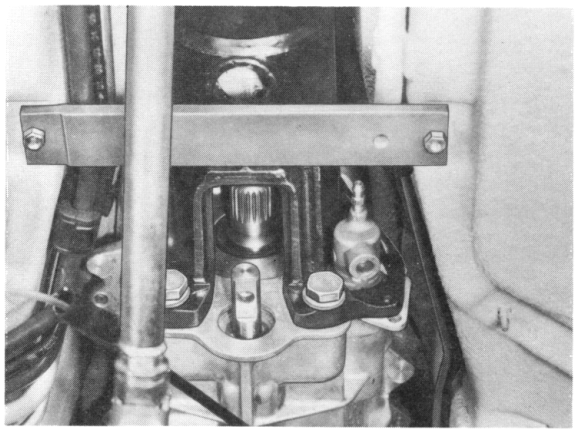

88-514

Sketch of own-construction tool

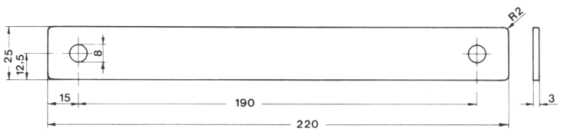

156-10

Installing

When installing, make sure that the aluminium plate between central pipe and rear-axle transmission is fitted correctly.

Printed in Germany – II,1989

Disassembling and assembling front-axle final drive

Tools

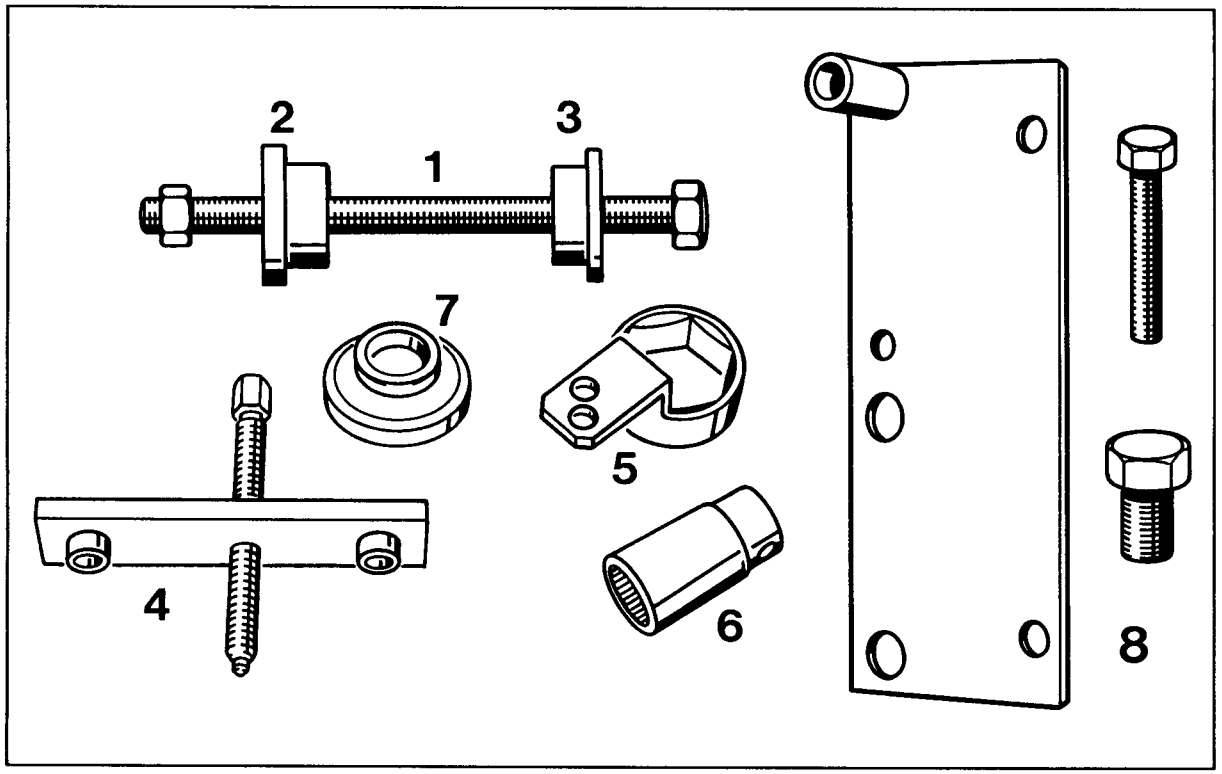

191-39

No.	Description	Special Tools	Order number	Remarks
1	Threaded spindle	VW 517		
2	Pressing tool	VW 511		
3	Pressing tool	9502	000.721.950.20	
4	Retainer plate	9504	000.721.950.40	with standard threaded spindle (e.g. Kukko 20/1)
5	Holding device	9503	000.721.950.30	
6	Socket wrench	9505	000.721.950.50	
7	Pressing tool	9252	000.721.925.20	
8	Retainer plate	9296	000.721.929.60	

Printed in Germany – II, 1989

Disassembling and assembling front-axle final drive

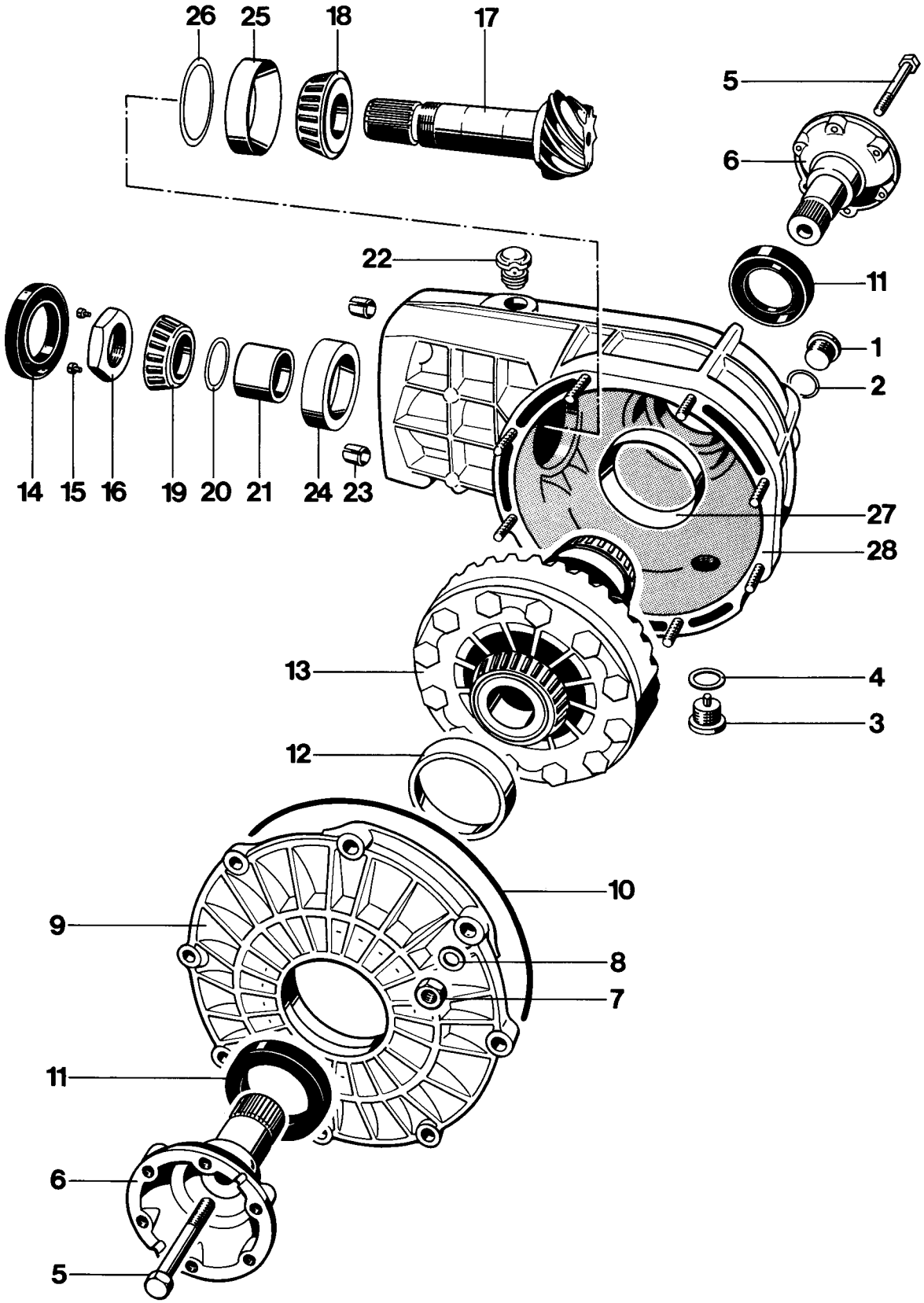

Printed in Germany – II, 1989

No.	Description	Qty.	Note when: Removing	Installing
1	Plug	1		Tighten with 30 Nm (22 ft.lb.)
2	Seal	1		Replace
3	Plug with magnet	1		Tighten with 30 Nm (22 ft.lb.)
4	Seal	1		Replace
5	Hexagon head screw	2		Tighten with 44 Nm (32.5 ft.lb.)
6	Joint flange	2		
7	Hexagon nut	8		Tighten with 23 Nm (17 ft.lb.)
8	Washer	8		
9	Cover	1		
10	O-ring	1		Replace, apply light film of oil
11	Shaft seal	2		Pack area between sealing lips with grease (e.g. Olista Longtime 3 EP). Drive into position with Special Tool 9252.
12	Outer bearing race	1	Heat cover up to approx. 120 °C (248 °F)	
13	Differential	1		Readjust if necessary
14	Shaft seal	1		Pack area between sealing lips with grease (Olista Longtime 3 EP).
15	Screw	2		Tighten with 6 Nm (4.5 ft.lb.)
16	Lock nut	1	Remove with Special Tools 9503 and 9505	Tighten with 230 Nm (170 ft.lb.) and secure with screws (No. 15)
17	Drive pinion	1	Press out with Special Tool 9504	Observe matching number, readjust i. n.

Printed in Germany – II, 1989

No.	Description	Qty.	Note when: Removing	Installing
18	Inner bearing race	1	Press off with suitable separating device (e.g. Kukko 17-1)	Heat up to approx. 120 °C (248 °F)
19	Inner bearing race	1	Heat up to approx. 120 °C (248 °F)	
20	Shim "S4"	X	Make a note of thickness for refitting	Measure again if necessary
21	Spacer	1		
22	Bleeder	1		
23	Clamping sleeve	2		
24	Outer bearing race	1	Heat housing up to approx. 120 °C (248 °F)	Heat housing up to approx. 120 °C (248 °F) and pull in with Special Tools VW 517, VW 511 and 9502
25	Outer bearing race	1	Heat housing up to approx. 120 °C (248 °F)	Heat housing up to approx. 120 °C (248 °F) and pull in with Special Tools VW 517, VW 511 and 9502
26	Shim "S3"	X	Make a note of thickness for refitting	Measure again i. n.
27	Inner bearing race	1	Heat housing up to approx. 120 °C (248 °F)	Heat housing up to approx. 120 °C (248 °F)
28	Housing	1		

Printed in Germany – II, 1989

Notes on disassembling and assembling

Disassembling

1. Remove lock nut with Special Tools 9505 and 9503.

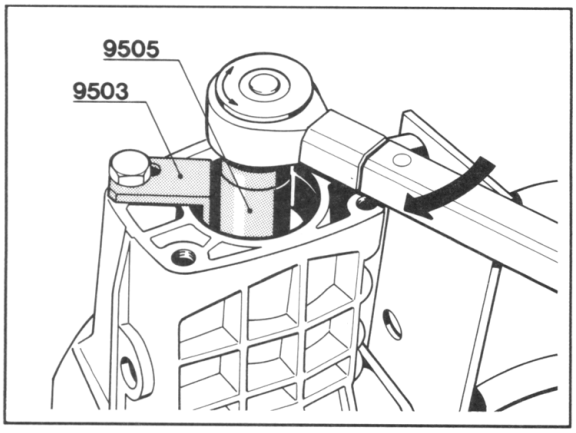

166-39

2. Press out drive pinion with Special Tool 9504 and standard spindle M 14 x 1.5 (e.g. Kukko 20/1).

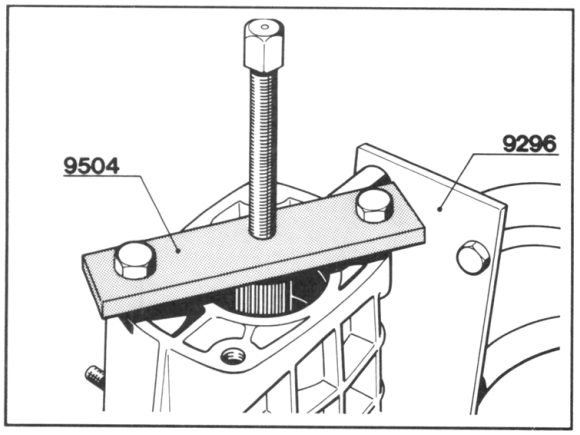

170-39

Assembling

1. Heat housing up to approx. 120 °C (248 °F) and pull in outer bearing races with Special Tools VW 517, VW 511 and 9502.

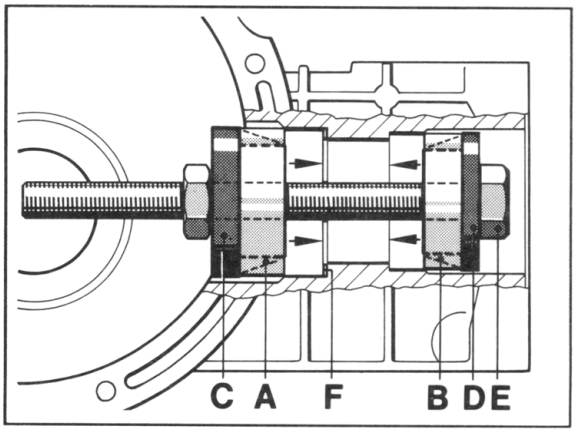

168-39

A = Outer bearing race

B = Outer bearing race

C = Pressing tool VW 511

D = Pressing tool 9502

E = Threaded spindle VW 517

F = Shim "S3"

2. Only fill with transmission oil after gearbox has been installed and central pipe fitted.

Disassembling and assembling differential (front-axle drive)

Tools

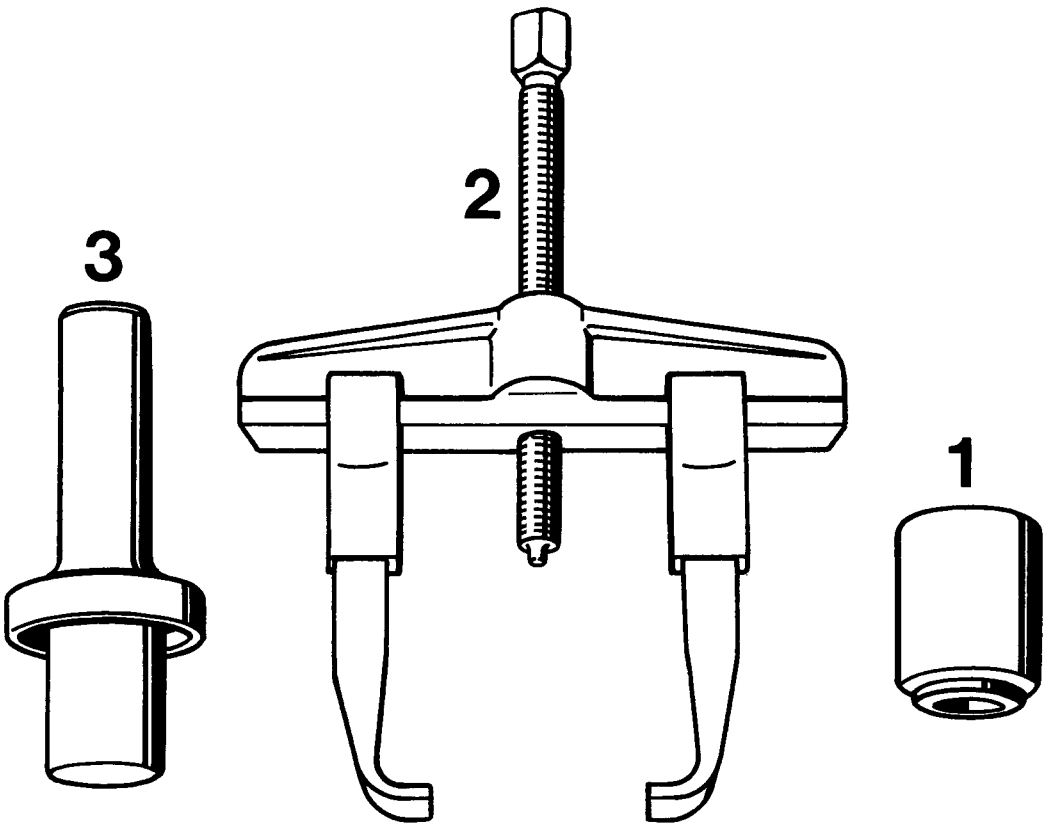

No.	Description	Special Tools	Order number	Remarks
1	Pressing tool	P 263	000.721.263.00	
2	Puller	-	-	standard
3	Pressing tool	P 264 b	000.721.264.20	

Printed in Germany – II, 1989

Disassembling and assembling differential (front-axle drive)

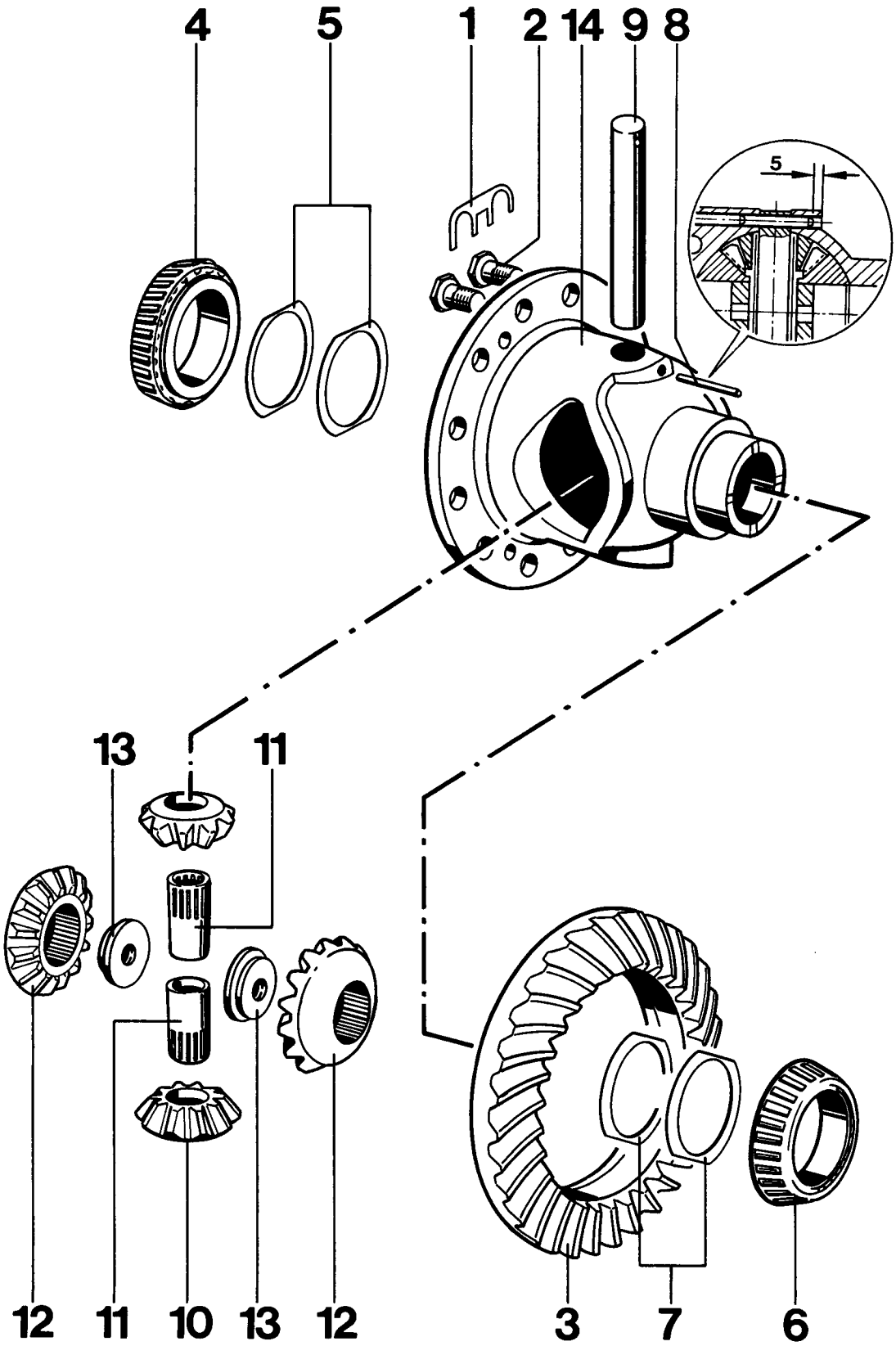

Printed in Germany – II, 1989

No.	Description	Qty.	Note when: Removing	Installing
1	Tab washer (omitted for Verbus-Ripp bolts)	6		Replace. Slide into groove of hexagon head screw, pull together at front with pliers (to ensure that tab washer is firmly linked to hexagon head screw) and secure below over a hexagonal surface.
2	Hexagon head screw (with tab washer)	12		Thread must be dry and free of grease. Tighten with 150 Nm (110.5 ft.lb.).
–	Verbus-Ripp bolt (**without** tab washer)	1		Must always be replaced. Threads must be dry and grease-free. Tighten to 200 Nm (148 ftlb).
3	Ring gear	1		Threaded holes for ring-gear screws must be dry and free of grease. Observe matching numbers. Readjust if necessary.
4	Tapered roller bearing - inner race	1	Remove with suitable puller and P 263	Press on with P 264 b
5	Shim "S_1"	X	Mark for refitting	Measure thickness again if necessary
6	Tapered roller bearing - inner race	1	Pull out with suitable puller and P 263	Press into place with P 264 b
7	Shim "S_2"	X	Mark for refitting	Remeasure thickness if necessary
8	Spiral pin	1		Drive into correct position
9	Bolt	1		

Printed in Germany – XVIII, 1992

No.	Description	Qty.	Note when: Removing	Installing
10	Bevel pinion	2		Apply code of MOS2 paste to convex surface. Replace only as a set complete with shaft bevel gears
11	Needle sleeve	2		
12	Shaft bevel gear	2		Apply film of MOS2 paste to convex surface. Replace only as a set complete with bevel pinions
13	Threaded fitting	2		
14	Housing	1		

Printed in Germany – XVIII, 1992

Adjusting drive set (front-axle drive)

Tools

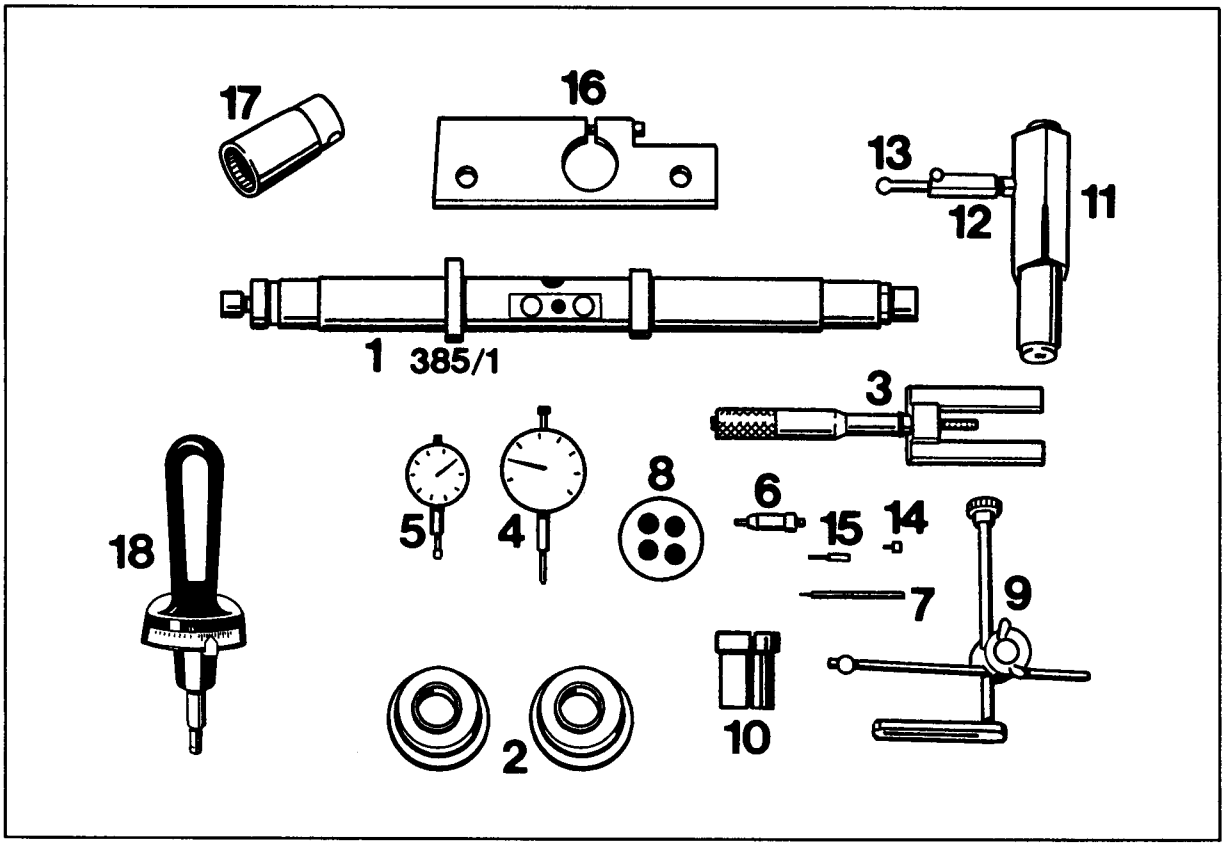

233-39

Printed in Germany – II, 1989

Adjusting drive set (front-axle drive)

Tools

No.	Description	Special Tools	Order number	Remarks
1	Measuring mandrel	VW 385/1		
2	Centering disks	VW 385/4		
3	Universal gauge	VW 385/30		
4	Dial gauge	-		standard
5	Dial gauge	-		standard Measuring range 3 mm
6	Plunger	VW 385/14		
7	Dial-gauge extension	VW 385/56		
8	Final dimension plate	9281	000.721.928.10	
9	Dial-gauge holder	VW 387		
10	Clamping sleeve	9145	000.721.914.50	
11	Adjusting device	VW 521/4		
12	Measuring lever	VW 388		
13	Plunger	VW 388		
14	Dial-gauge extension	VW 382/10		6.0 mm long
15	Dial-gauge extension	VW 385/15		9.3 mm lang
16	Retainer plate	9506	000.721.950.60	
17	Socket wrench	9505	000.721.950.50	
18	Torque gauge	-		standard

Printed in Germany – II, 1989

Adjusting drive set (front-axle drive)

Practical procedure when readjusting the drive set

If it is necessary to adjust drive pinion and ring gear, following this sequence will ensure an efficient working procedure:

1. Determine total shim thickness "S_{tot}" (S_1 plus S_2) for specified preload of tapered-roller bearing/differential.
2. Determine shim thickness "S_3".
3. Determine bearing pressure "S_4".
4. Split total shim thickness "S_{tot}" into S_1 and S_2 so that there is the specified circumferential backlash between ring gear and drive pinion.

The aim of this adjustment is to once again achieve the position of smoothest running which was obtained on test equipment in the production line.

A correct result presupposes greatest possible degree of cleanliness during all assembly work and measuring procedures.

It is only necessary to adjust drive pinion and ring gear or drive set when working on the final drive assembly if parts have been replaced which have direct influence on the adjustment. Refer to the following table in order to avoid unnecessary adjusting procedures.

Adjust is: / Replace component	Ring gear (S_1 + S_2)	Drive pinion (S_3)	Bearing pressure (S_4)
Transmission case	X	X	X
Side transmission cover	X		
Drive set	X	X	X
Differential housing	X		
Tapered roller bearing for differential	X		
Tapered roller bearing for drive pinion		X	X

Adjusting drive set (front-axle drive)

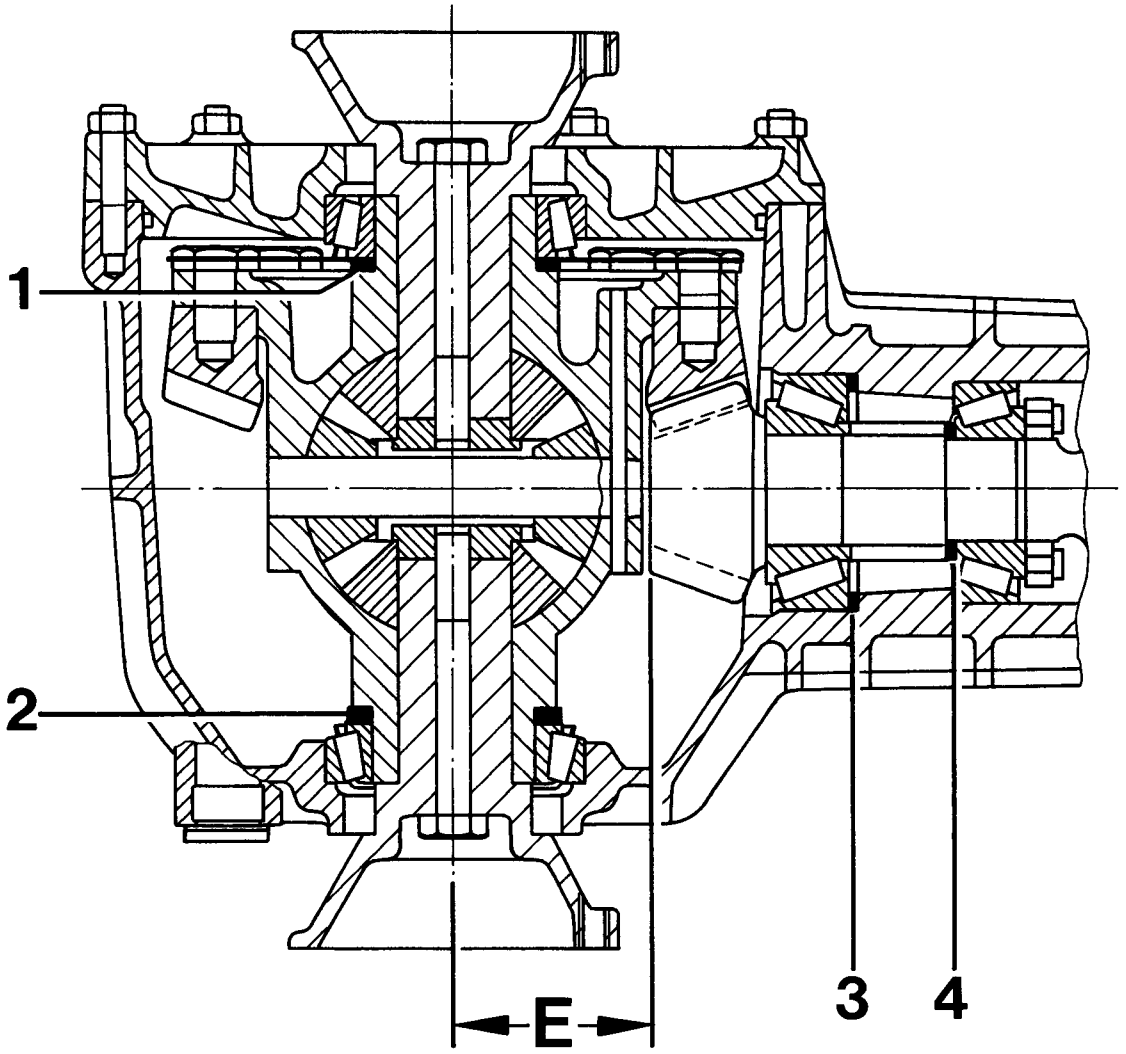

1 - Spacer S_1
2 - Spacer S_2
3 - Shim S_3
4 - Shim S_4
E - Adjustment dimension

A correct result presupposes cleanliness and conscientiousness for all assembly operations and measuring procedures.

Printed in Germany – II, 1989

Adjusting drive set (front-axle drive)

General

The setting of drive pinion, ring gear and bearing pressure of both tapered roller bearings on the drive pinion are determining factors for the service life and smooth running of the front-axle final drive. Drive pinion and ring gear are therefore already matched during production, which are checked for good surface appearance and low noise factor in both directions of rotation on special test equipment. The position where smoothest running is achieved is determined by shifting the drive pinion axially, whereby the ring gear is kept within the tolerance of specified backlash. Deviation "r" from the specified design dimension "R_Q" is determined, added to design dimension "R_o" and embossed on the ring gear as setting value "E".

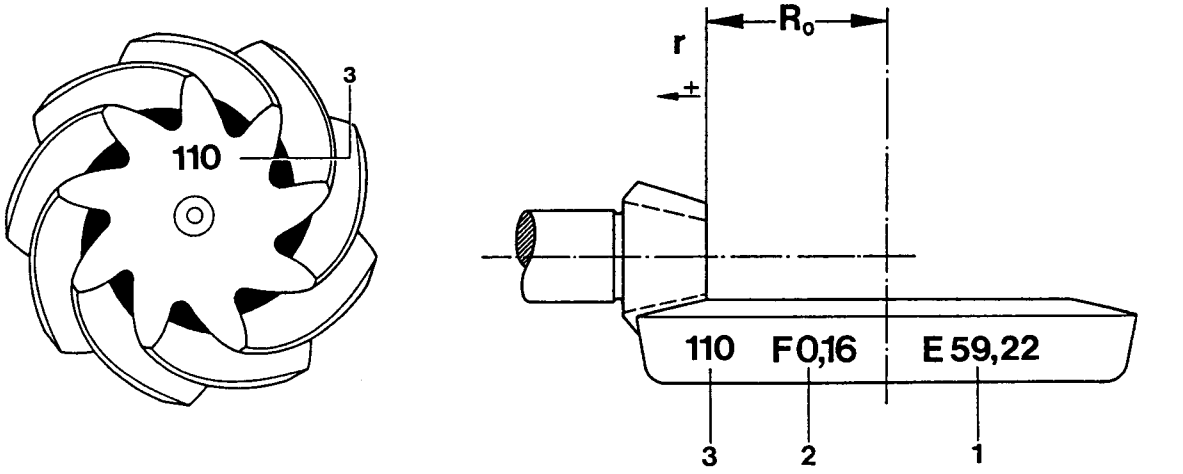

218-39

R_o = Design dimension

r = Deviation r

1 = Setting value (R_o + r) e.g. 59.22

2 = Backlash, e.g. F 0.16

3 = Matching number

Printed in Germany – II, 1989

Adjusting drive set (front-axle drive)

Adjusting drive pinion (shim S_3)

Note

The setting value "E" is given on the ring gear.

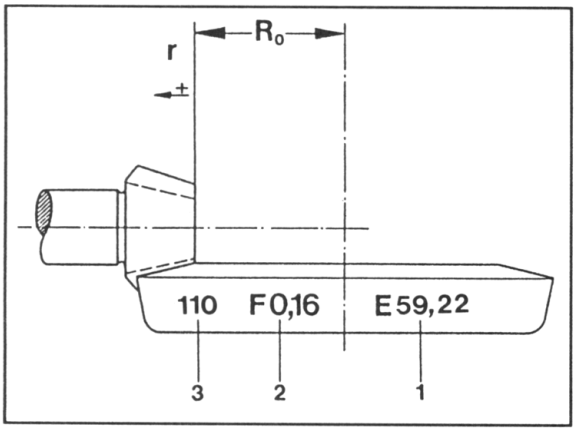

216 - 39

1 = Setting value "E"

Note

Use shims which are 2.0 mm thick as shim thickness "S_3" between front outer bearing race and housing as a starting point for the adjustment of the drive-pinion bearing.

1. Heat front drive-pinion bearing up to approx. 120 °C (248 °F) and press onto the drive pinion in the correct position.

2. Heat housing up to approx. 120 °C (248 °F) and pull in outer bearing races with Special Tools VW 517, VW 511 and 9502.

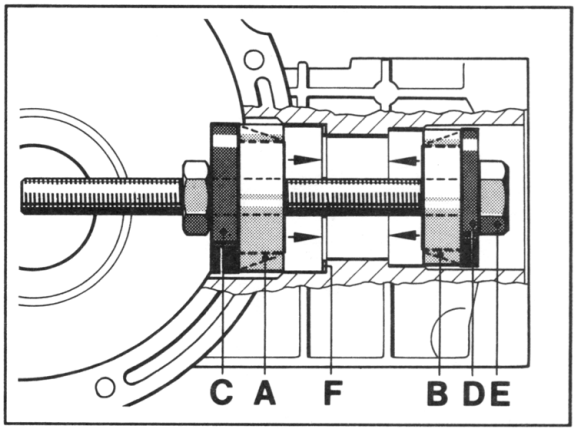

168 - 39

A = Outer bearing race

B = Outer bearing race

C = Pressing tool VW 511

D = Pressing tool 9502

E = Threaded spindle VW 517

F = Shim "S_3"

3. Insert drive pinion with spacer sleeve, heat rear drive-pinion bearing up to approx. 120°C (248 °F) and mount onto the drive pinion without shim "S_4".

4. Tighten the lock nuts of drive pinion carefully up to a maximum of 100 Nm (74 ft.lb.) using Special Tools 9503 and 9505 until you reach a drag moment of 270...350 Ncm.

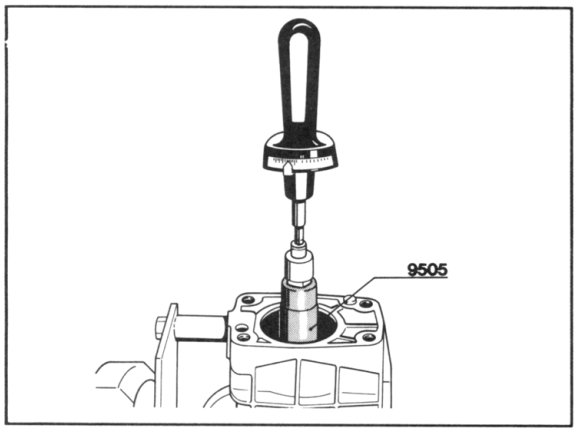

225 - 39

Note

Check the moment of drag from time to time while tightening the nuts.

5. Set the adjusting ring of measuring mandrel VW 385/1 to dimension "a".

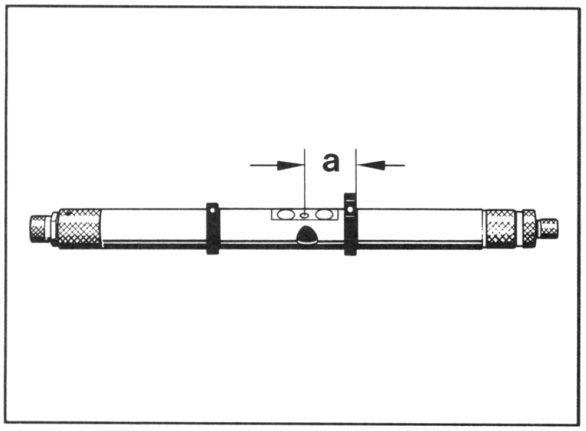

"a" = ca. 55 mm

223-39

6. Assemble measuring mandrel with centering disk VW 385/4, plunger VW 385/14 and dial-gauge extension VW 385/15.

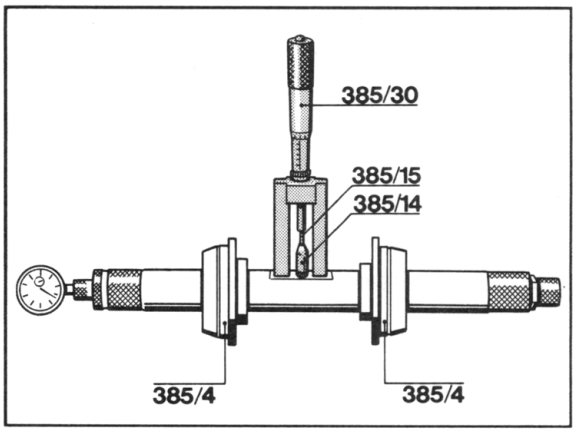

7. Set measuring mandrel with gauge 385/30 to setting value (59.22 mm in the example). Set dial gauge (3 mm measuring range) to zero with 1 mm preload.

8. Place final dimension plate 9281 onto the drive-pinion head and insert measuring mandrel into transmission case. Dial-gauge extension located in the area of the final dimension plate.

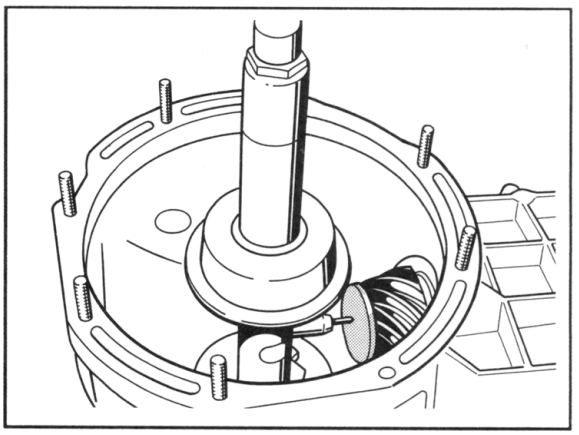

221-39

9. Fit side transmission cover without O-ring and fasten cross-wise with 4 nuts.

Note

Do not use a hammer when fitting the side transmission cover (the magnet-fitted final dimension plate may fall). Settle the cover in its installation position by tightening the nuts uniformly.

10. Pull second centering disk with spindle far enough outwards that it is just still possible to turn the measuring mandrel by hand.

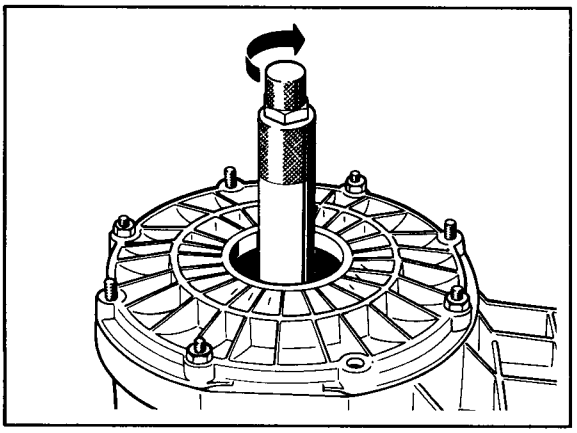

227/39

11. Turn measuring mandrel carefully until the dial-gauge extension is vertical to the facing surface of the drive-pinion head. At this point, the pointer of the dial gauge reaches maximum deflection (reversing point), at which point the dial gauge should be read.

Note

If the measured value deviates from the setting value "E" clockwise (59.22 mm in the example) then the dimension is less than 59.22 mm; that means that the value deviating from zero must be subtracted from dimension 59.22.

Example:

The small pointer on the dial gauge is pointing between 1 and 2, the large pointer indicates 0.15 mm.

Dial-gauge setting	59.22 mm
Measured value	- 0.15 mm
Value towards drive pinions facing	59.07 mm
Setting value "E" (e.g.)	59.22 mm
Value towards drive-pinion facing	- 59.07 mm
Deviation	0.15 mm

The drive pinion must therefore be shifted a further 0.15 mm away from the middle of the ring gear.

This is achieved by using a shim "S_3" which is 0.15 mm thinner. At the same time, round up or down to the nearest 0.05 mm.

If the measured value deviates from setting value "E" counterclockwise (59.22 mm in the example) then the dimension is greater than 59.22 mm; that means that the value deviating from 0 must be added to dimension 59.22.

Printed in Germany – II, 1989

Example:

The small pointer of the dial gauge indicates between 1 and 0, the large pointer indicates 0.08 mm.

Dial-gauge setting		59.22 mm
Measured value	+	0.08 mm
Value towards drive-pinion facing		59.30 mm
Value towards drive-pinion facing		59.30 mm
Setting dimension "E"(e.g.)	-	59.22 mm
Deviation		0.08 mm

The drive pinion must therefore be shifted nearer to the middle of the ring gear by a further 0.08 mm.

This is achieved by using shim "S_3" which is thicker by 0.08 mm.

At the same time, round up or down to the nearest 0.05 mm.

12. After altering shim "S_3" check setting value "E" once again. A deviation of ± 0.03 mm is permitted.

Printed in Germany – II, 1989

Adjusting drive set (front-axle drive)

Adjusting ring gear

Determine total shim "S $_{tot.}$" ($S_1 + S_2$).

The ring gear must be readjusted if transmission case, side transmission

cover, tapered roller bearing for differential, differential housing or drive set have been replaced.

Note

The drive pinion must be removed to determine the preload of tapered roller bearing on the differential.

1. Make sure that the outer bearing races of the tapered roller bearing are firmly secured in transmission case or side transmission cover.

2. Fit a spacer, 2 mm thick, on ring-gear side and opposite side of differential to be used.

3. Insert differential into transmission case and crank several times.

4. Install side transmission cover without seal and tighten all hexagon nuts with 23 Nm (17 ft.lb).

5. Place final dimension plate VW 385/17 on the collar of the differential.

6. Fasten universal dial-gauge holder VW 387 with dial gauge and extension to the housing and set to zero with 2 mm preload.

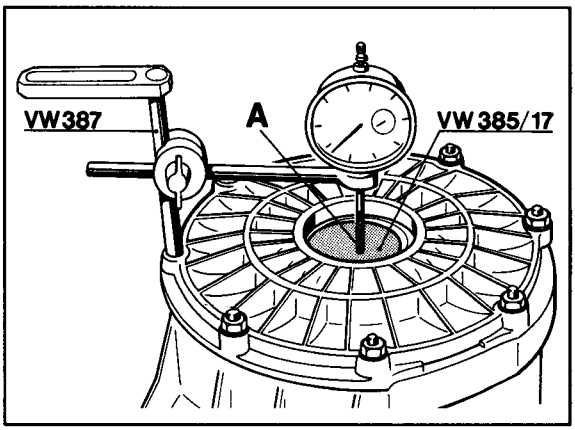

226 - 39

A = Dial-gauge extension (approx. 30...40 mm long)

7. Move differential up and down. Read backlash off dial gauge and note.

Note

Do not turn differential while measuring backlash as this will falsify the measuring result.

Printed in Germany – II, 1989

8. Calculate "$S_{tot.}$".
   "$S_{tot.}$" = Thickness of shim provided + measured value + Pressure of tapered roller bearing

Example:

Thickness of shim provided	4.00 mm
Measured value	0.80 mm
Pressure (constant value)	0.30 mm
"$S_{tot.}$"	5.10 mm

9. Remove differential, pull off both tapered roller bearings and split the calculated thickness of shims "$S_{tot.}$" as follows.

Select a spacer S_1 which is 0.70 mm thinner and S2 which is 0.70 mm thicker as a starting point for subsequent adjustment of the backlash.

Example:

Total thickness of spacers
$S_1 + S_2 = 5.10$ mm

Thickness of spacer S_1 =

$$\frac{5.10 \text{ mm}}{2} = 2{,}55 \text{ mm} - 0{,}70 \text{ mm} = 1{,}85 \text{ mm}$$

Thickness of spacer S_2 =

$$\frac{5.10 \text{ mm}}{2} = 2{,}55 \text{ mm} + 0{,}70 \text{ mm} = 3{,}25 \text{ mm}$$

Note

Spacers are available in thicknesses from 1.6...3.1 mm in increments of 0.10 mm.

A 0.25 mm thick shim is provided to enable the spacer thicknesses to be graded into increments of 0.05 mm.

The calculated spacer thicknesses must therefore be rounded up or down to feasible values in such a way that the total shim thickness S_1 and S_2 is not altered.

Measure shims with a micrometer in several places. Permitted deviation 0.02 mm. Also check shims for burrs and damage.

Printed in Germany – II, 1989

Adjusting drive set (front-axle drive)

Determine bearing pressure of tapered roller bearing on drive pinion (S_4)

Note

The setting value "E" must be within the tolerance of ±0.03 mm in order to determine the bearing pressure.

1. Fit drive pinion with 2.5 mm thick shim "S4", heat rear drive-pinion bearing up to approx. 120 °C (248 °F) and install.

2. Tighten lock nut with 230 Nm (169.5 ft.lb.) using Special Tools 9503 and 9505.

3. Fasten universal dial-gauge holder VW 387 to the housing and set dial gauge to 0 with 2 mm preload.

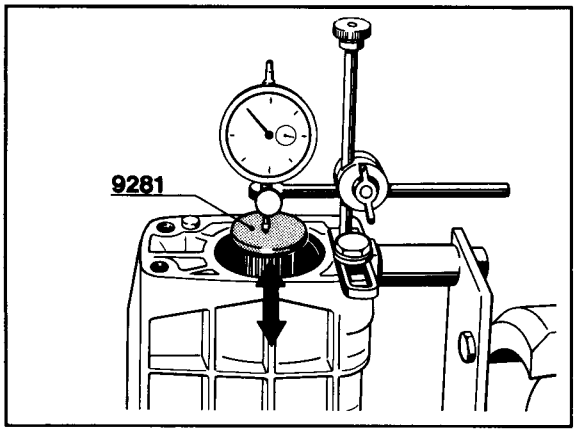

167 - 39

4. Move drive pinion in axial direction and measure backlash on dial gauge, noting the value.

Note

Do not turn drive pinion while measuring backlash as this will falsify the measured result.

5. Calculate bearing pressure.

Example:

Inserted shims	2.50 mm
Measured backlash	- 0.95 mm
Axial preload (constant value	- 0.15 mm
Shim "S_4"	1.40 mm

6. Remove drive pinion and alter shim "S_4" to the calculated value.

7. Tighten lock nut with 230 Nm (169.5 ft.lb.), check setting value "E" and moment of drag (270...350 Ncm) several times.

Printed in Germany – II, 1989

Adjusting drive set (front-axle drive)

Adjusting circumferential backlash

Note

The backlash to be set is indicated on the ring gear.

1. Install drive pinion using shims "S_3" and "S_4" determined while adjusting the drive pinion.

Note

The collar nut for the drive pinion must always be tightened with 230 Nm (169.5 ft.lb.) before measurement.

2. Fit differential with tapered roller bearing and calculated spacers (S_1 + S_2) into housing.

3. Fit side transmission cover and tighten all hexagon nuts with 23 Nm (17 ft.lb.).

Note

Always bear in mind that there is a certain amount of backlash when tightening the nuts. Under no circumstances may the drive pinion seize.

4. Attach measuring lever VW 388 to adjusting device VW 521/4 and set lever length to 75 mm with plunger over the large hexagon surface (refer to dimension "a" in the figure).

5. Insert adjusting device into differential with clamping sleeve (Special Tool 9145) and clamp firmly.

6. Crank differential in both directions several times to settle the tapered roller bearing.

7. Assemble universal dial-gauge holder with flat extension in such a way as to produce a right-angle between dial-gauge axis and lever.

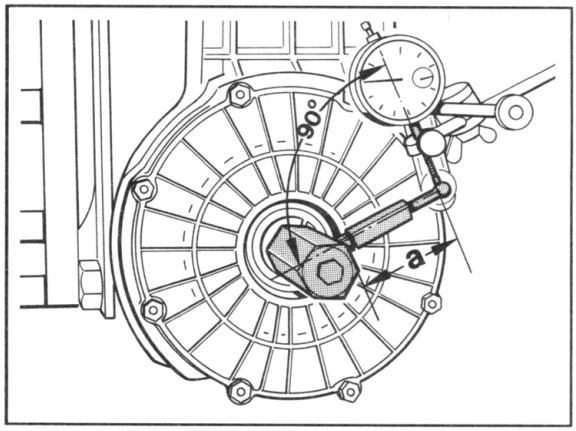

Dimension "a" = approx. 75 mm 224 - 39

8. Turn ring gear carefully with the hexagon of the adjusting device as far as the stop and set dial gauge to zero. Turn back ring gear and read off circumferential backlash. Make a note of the value.

Printed in Germany – II, 1989

Note

Always hold the drive pinion with Special Tools 9505 and 9506 when measuring.

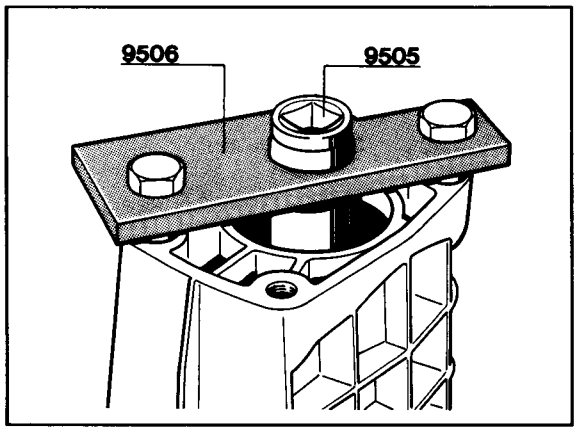

220-39

9. Repeat measuring procedure another three times, turning the ring gear a further 90° in each case. The measured values may not deviate from one another by more than 0.05 mm.

Note

The backlash to be set is given on the ring gear. The actual value may be less than this value by 0.05 mm. Under no circumstances may the backlash be greater than this value.

10. If it is not possible to achieve the prescribed backlash, then the spacers (S_1 + S_2) must be replaced again. At the same time, the total thickness of shim ($S_{tot.}$) must not be altered.

PDAS – Diagnosis (Survey)

PDAS (Porsche Dynamic All Wheel Drive Control) works in conjunction with ABS (Antiblock System). Consequently there will be overlapping in diagnosing / troubleshooting. PDAS diagnosis is filed at the end of Repair Group 45 (from page D 39/45 - 1 on) for this reason.
The "D" preceding the repair group page number stands for diagnosis. Normally all D-marked pages will be filed at the end of a corresponding Repair Group.

Survey* of Diagnosing and Installing Jobs on PDAS / ABS

–	**Diagnosing / Troubleshooting / Installing**	**Rep. Gr.**
–	Axial and lateral acceleration sensors	45
–	PDAS diagnosis	45
–	Hydraulics for lock operation and brake booster	47

* Operations not listed here will be included in future supplements.

Printed in Germany – III, 1989

Carrera 2

page

Clutch, Controls

Technical data . . . . . 30 - 0201

Manual transmission, controls, case

Dismantling and assembling transmission . . . . . 34 - 201
Removing and installing input shaft oil seal . . . . . 34 -209
Dismantling and assembling tensioning plate . . . . . 34 - 211
Dismantling and assembling front transmission cover . . . . . 34 - 215
Dismantling and assembling gear housing . . . . . 34 - 219
Dismantling and assembling transmission case . . . . . 34 - 223

Manual transmission - gears, shafts

Dismantling and assembling input shaft . . . . . 35 - 201
Dismantling and assembling drive pinion . . . . . 35 - 209

Final drive, differential

Removing and installing differential . . . . . 39 - 201
Dismantling and assembling differential . . . . . 39 - 205
Dismantling and assembling drivetorque controlled limited slip differential for Carrera RS . . . . . 39 - 210a
Dismantling and assembling limited-slip differential (locking value 40%) . . . . . 39 - 210i
Adjusting drive set . . . . . 39 - 211

Printed in Germany – XX, 1993

Technical data

5 speed manual transmission (Typ G 50)

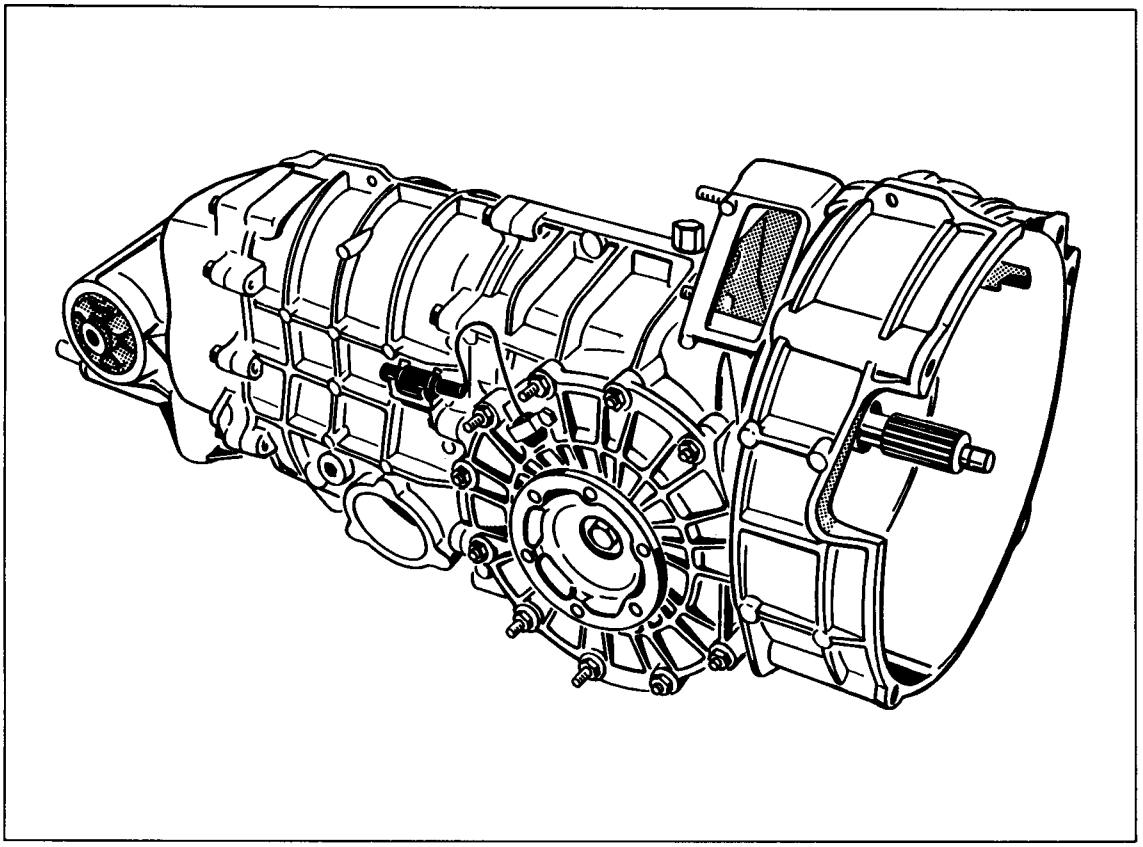

Type	Key letter	Equipment	installed in:	Model year
G 50/03	-	5 Speed	911 Carrera 2 worldwide except Switzerland	from '90 Model
G 50/04	-	5 Speed	911 Carrera 2 Switzerland	from '90 Model
G 50/05	–	5 Speed	911 Carrera 2 USA 911 RS America	from '92 Model from '92 Model
G 50/10	–	5 Speed with limited slip differential	911 Carrera RS	from '92 Model

Printed in Germany – XVIII, 1992

Technical data

Structure of transmission numbers

G5003	1	L	05641
transmission type	**index of variations within the assembly no.** 1 = normal differential 2 = ZF slip differential	**model year** L = 1990 M = 1991	**serial no.** e.g. 05641

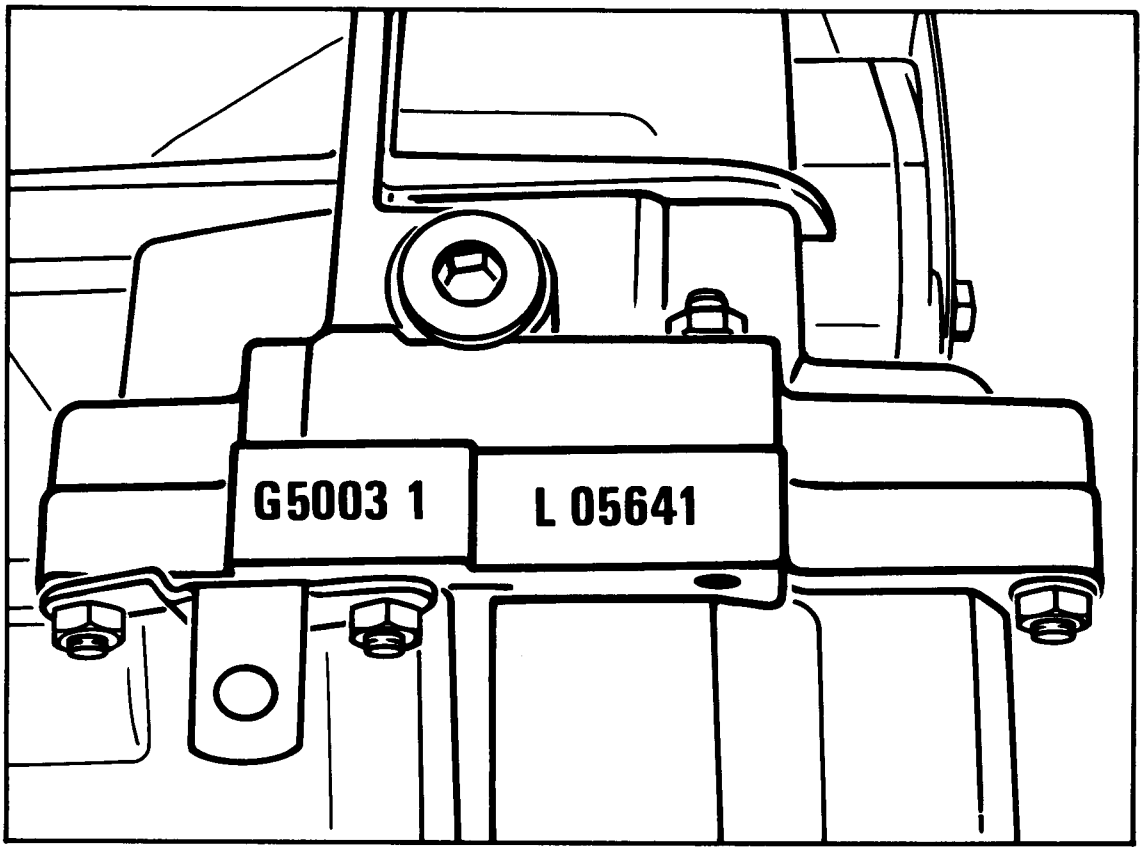

502-30

Note

The model letter is omitted as of MY '92.

Printed in Germany – XVIII, 1992

Technical data

General data	Manual transmission G 50 / 03 / 04 / 05 / 10			
Transmission ratios $Z_2 : Z_1 = i$	G50/03	G50/04	G50/05	G50/10
1st gear	42 : 12 = 3.500	41 : 13 = 3.154	42 : 12 = 3.500	41 : 13 = 3.154
2nd gear	35 : 17 = 2.059	36 : 19 = 1.895	35 : 17 = 2.059	36 : 19 = 1.895
3rd gear	38 : 27 = 1.407	36 : 27 = 1.333	38 : 27 = 1.407	38 : 27 = 1.407
4th gear	38 : 35 = 1.086	36 : 35 = 1.029	38 : 35 = 1.086	38 : 35 = 1.086
5th gear	33 : 38 = 0.868	33 : 38 = 0.868	33 : 38 = 0.868	33 : 38 = 0.868
Rev.gear	40 : 14 = 2.857	40 : 14 = 2.857	40 : 14 = 2.857	40 : 14 = 2.857
Final drive	Hypoid bevel-gear drive with 16 mm offset			
Transmission ratio Final drive	31 : 9 = 3.444	31 : 9 = 3.4444	30 : 9 = 3.333	31 : 9 = 3.444
Capacity	approx. 3.6 liter multigrade gear oil SAE 75 W 90 of API classification GL 5 (or MIL-L 2105 B)			

Printed in Germany – XVIII, 1992

Technical data

Tightening torques for manual transmission

Location	Thread	Tightening torques Nm
Oil drain and oil filler plug	M 22 x 1.5	30 (22 ft.lb)
Hex nut for gear housing and transmission case, side cover tensioning plate	M 8	23 (17 ft.lb)
Clamping plate at front transmission cover	M 6	10 (7.3 ft.lb)
Collar nut / input shaft	M 14 x 1.5	140 (103 ft.lb)
Collar nut / drive pinion	M 30 x 1.5	250 (184 ft.lb)
Hex bolt / selector fork	M 8	23 (17 ft.lb)
Backup light switch to gearbox	M 18 x 1.5	35 (26 ft.lb)
Guide tube to transmission case	M 6	10 (7.3 ft.lb)
Shift gate to tensioning plate	M 6	10 (7.3 ft.lb)
Collar bolt / reverse idler gear II	M 8	35 (26 ft.lb)
Breather at transmission case	M 14 x 1.5	35 (26 ft.lb)
Collar nut/ input shaft	M 30 x 1.5	250 (184 ft.lb)
Hex bolt / halfshaft flange	M 10	44 (32.5 ft.lb)

Printed in Germany – XVIII, 1992

Location	Thread	Tightening torques Nm
Tension spring / speedometer sensor	M 6	10 (7.3 ft.lb)
Ring gear in differential housing (hexagon head bolt with tab washer)	M 12 x 1.25	150 (111 ft.lb)
Ring gear in differential housing (Verbusrip bolt without tab washer)	M 12 x 1.25	200 (147 ft.lb)
Cover / transmission case	M 8 x 30	23 (17 ft.lb)

Printed in Germany – XVIII, 1992

Dismantling and assembling transmission

Tools

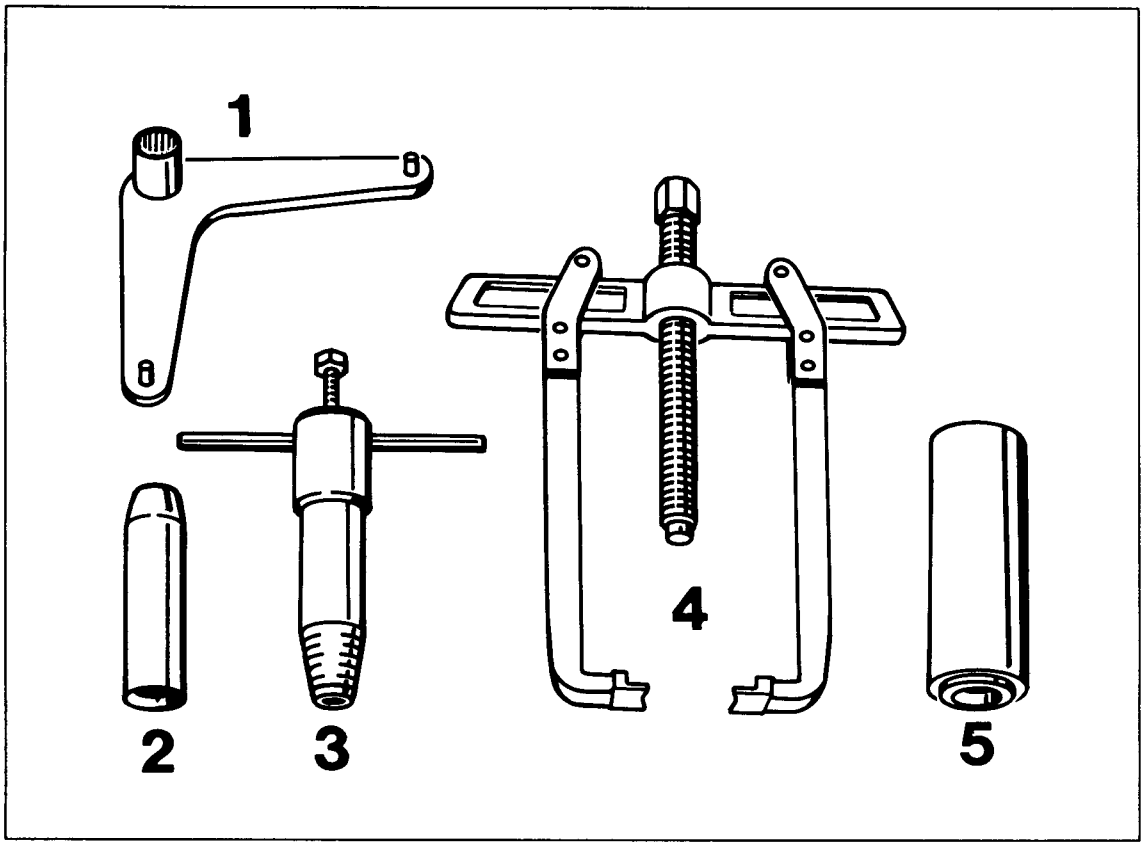

517-34

No.	Designation	Special tool	Order number	Explanation
1	Bracket	9253	000.721.925.30	
2	Assembling sleeve	9255	000.721.925.50	
3	Puller set	9251	000.721.925.10	
4	Puller	-	-	use arms of puller 9284
5	Drift	9256	000.721.925.60	

Printed in Germany – IX, 1990

Dismantling and assembling transmission

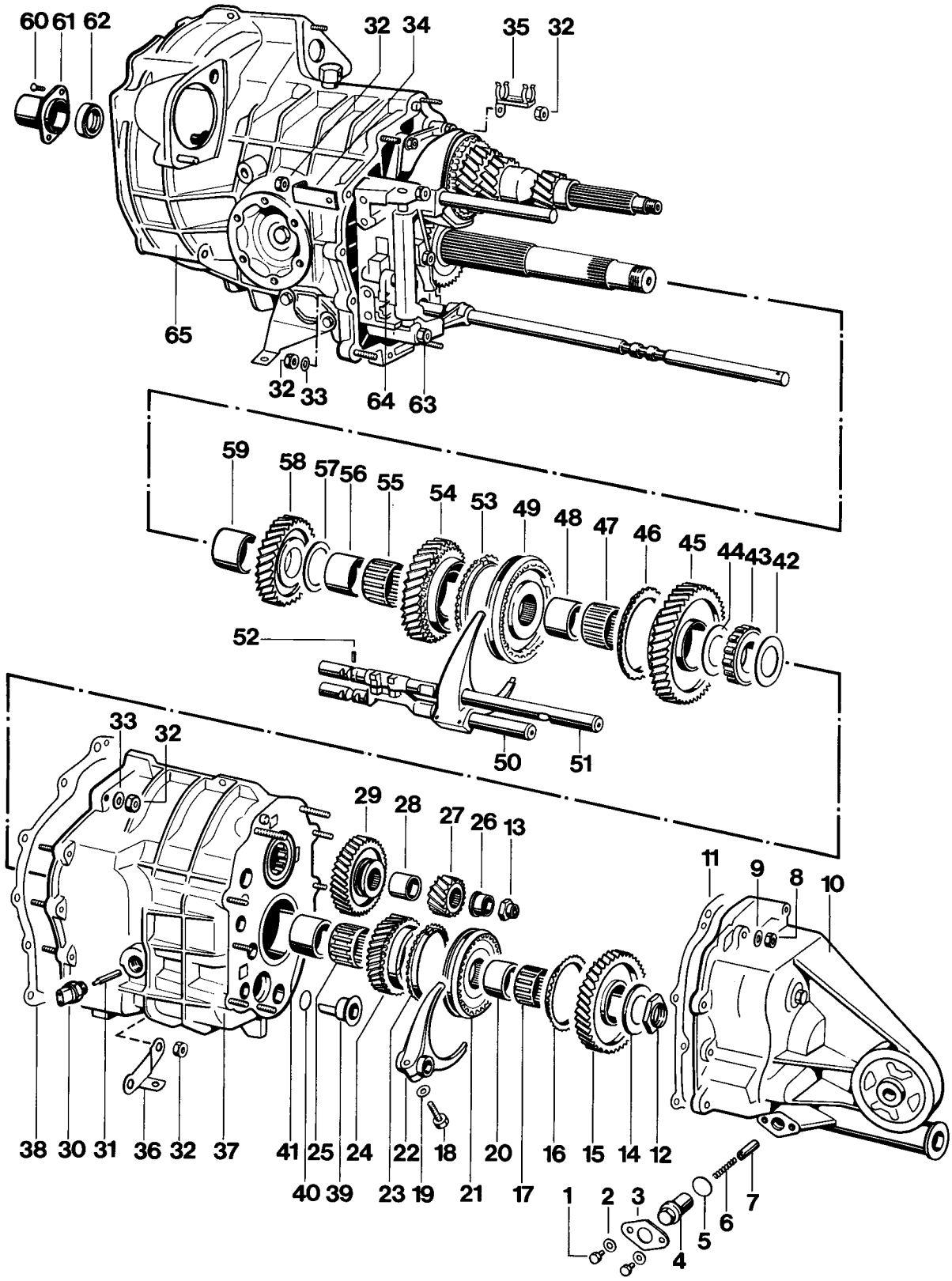

Printed in Germany – IX, 1990

No.	Designation	Qty.	Note: Removal	Installation
1	Hex screw	2		Torque: 10 Nm (7.3 ft.lb)
2	Washer	2		
3	Clamping plate	1		
4	Eccentric bush	1		Adjust
5	Seal	1		Replace
6	Pressure spring	1		
7	Locking bush	1		
8	Hex nut	10		Torque: 23 Nm (16.9 ft.lb)
9	Washer	10		
10	Front transmission cover	1		
11	Gasket	1		Replace
12	Collar nut	1	Block drive shaft with Special Tool 9253 and engage 5th gear	Torque: 250 Nm (183.25 ft.lb). Punch collar to lock
13	Collar nut	1	Block drive shaft with Special Tool 9253 and engage 5th gear	Torque: 140 Nm (102.6 ft.lb). Punch collar to lock
14	Thrust washer	1		
15	Loose gear, reverse gear	1		Always replace as a set
16	Synchronizing ring	1	Mark for refitting	Check for wear, reassemble in correct position with the same gearwheel (cogs towards driver dogs)
17	Needle cage	1		
18	Hex bolt	1		Torque: 23 Nm (16.9 ft.lb)
19	Washer	1		
20	Bushing	1		Heat to approx. 120° C
21	Guide sleeve with selector sleeve and synchronizing parts	1	Remove together with selector fork, mark for refitting	Selector sleeve and guide sleeve are matched

Printed in Germany – IX, 1990

No.	Designation	Qty.	Note: Removal	Installation
22	Selector fork	1	Remove together with selector sleeve and guide sleeve	Adjust
23	Synchronizing ring	1	Mark for refitting	Check for wear, assemble in correct position with the same gearwheel (cogs towards driver dogs)
24	Loose gear, 5th gear	1		Always replace in pairs
25	Needle cage	1	Mark for refitting	Assemble with the same gearwheel
26	Bearing inner race	1	Pull off with suitable claw puller	Heat to approx. 120° C
27	Fixed gear, reverse gear	1		Always replace as a set
28	Spacer	1		
29	Fixed gear (5th gear)			Always replace in pairs
30	Backup light switch	1		Torque: 35 Nm (25.7 ft.lb)
31	Plunger	1		Stepped end faces switch
32	Hex nut	12		Torque: 23 Nm (16.9 ft.lb)
33	Washer	8		
34	Bracket	1		
35	Bracket	1		
36	Bracket	1		
37	Gear housing	1		
38	Gasket	1		Replace
39	Oil delivery tube	1		Install in correct position
40	O-ring	1		Replace
41	Sleeve	1	Mark for refitting	Heat to approx. 120° C, assemble with the same gearwheel

Printed in Germany – IX, 1990

No.	Designation	Qty.	Note: Removal	Installation
42	Thrust washer (2.8 mm)	1		
43	Cylindrical roller bearing	1	Pull off with suitable claw bearing puller over 1st gear loose gear	Heat to approx. 120° C
44	Thrust washer (2.8 mm)	1		
45	Loose gear, 1st gear	1		Always replace in pairs
46	Synchronizing ring	1	Mark for refitting	Check for wear, reassemble in correct position with the same gearwheel (cogs towards driver dogs)
47	Needle roller bearing	1	Mark for refitting	Assemble with the same gearwheel
48	Sleeve	1	Mark for refitting, pull off with suitable claw puller over 2nd gear loose gear	Heat to approx. 120° C, reassemble with the same gear wheel
49	Guide sleeve with selector sleeve and synchronizing parts (1st and 2nd gear)	1	Remove together with selector fork and selector rod	Always replace in pairs
50	Selector fork with selector rod	1	Selector rod in idle position, remove together with selector sleeve and guide sleeve	
51	Selector rod for 5th and reverse gear	1		
52	Locking dowel	1		Grease lightly and insert in selector rod

Printed in Germany – IX, 1990

No.	Designation	Qty.	Note: Removal	Installation
53	Synchronizing ring	1	Mark for refitting	Check for wear, reassemble in correct position with the same gearwheel (cogs towards driver dogs)
54	Loose gear, 2nd gear	1		Always replace in pairs
55	Needle roller bearing	1	Mark for refitting	Reassemble with the same gearwheel
56	Sleeve	1	Mark for refitting, pull off with suitable claw puller over 3rd gear loose gear	Heat to approx. 120° C, reassemble with the same gearwheel
57	Thrust washer (1.4 mm)	1		
58	Fixed gear, 3rd gear			Always replace in pairs, large collar faces thrust washer no. 57
59	Spacer	1		
60	Raised countersunk head screw	2		Torque: 10 Nm (7.3 ft.lb)
61	Guide tube	1		
62	Oil seal	1		Drive in to correct position using assembly sleeve 9255 and drift 9256 once gears have been fully assembled (see also page 34 - 209)
63	Hex nut	10		Torque: 23 Nm (16.9 ft.lb)
64	Tensioning plate with drive pinion and input shaft	1		
65	Transmission case	1		

Printed in Germany – IX, 1990

Notes on dismantling and assembling

Dismantling

Note

To facilitate assembly, the gearwheel set is not removed completely but the drive pinion is partially dismantled before removal.

1. 5. Engage 5th gear, block input shaft with Special Tool **9253** and unscrew collar nut for drive pinion and input shaft.

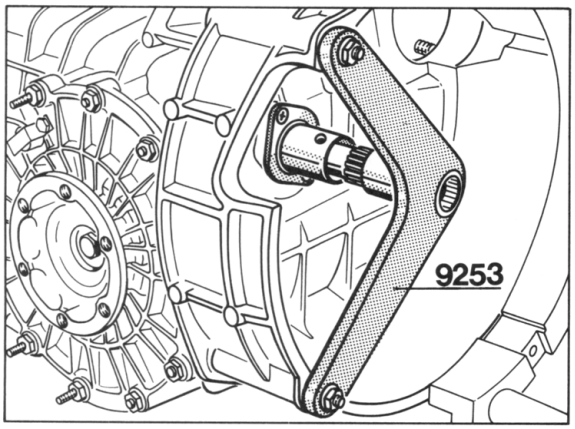

503-34

2. Pull off sleeve for reverse gear needle roller bearing.

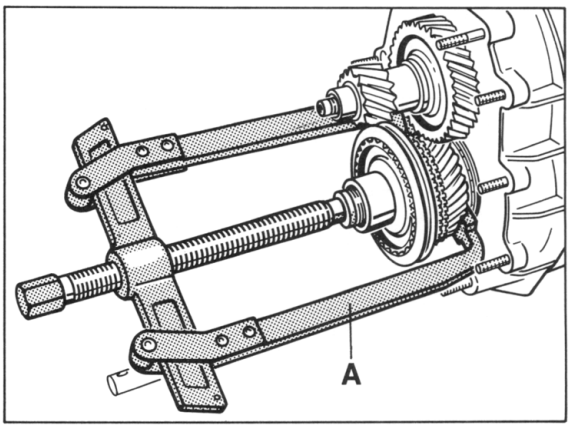

504-34

A = Arms of puller 9284

3. Pull off bearing inner race of the input shaft cylindrical roller bearing.

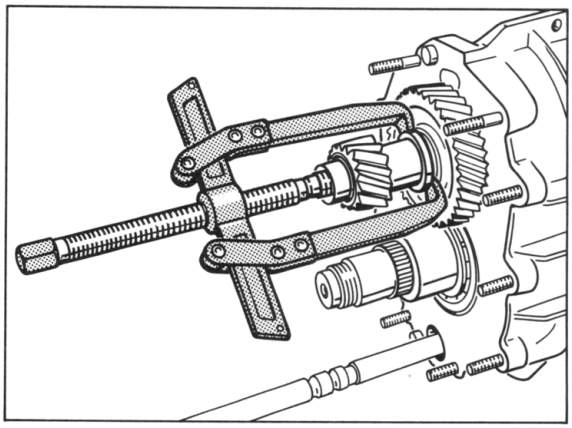

505-34

Assembling

1. Put the number of shims "S3" noted during disassembly or the number of shims calculated when adjusting the drive pinion on the case studs to achieve the corresponding thickness of shims.

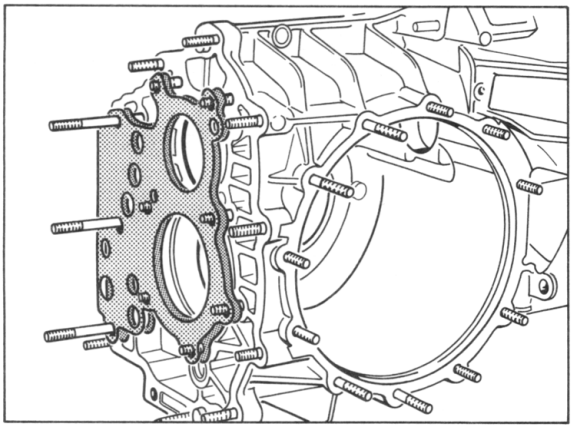

506-34

2. Install the preassembled gear set with the internal selector rod and tighten the tensioning plate mounting nuts to **23 Nm** (17 ft.lb).

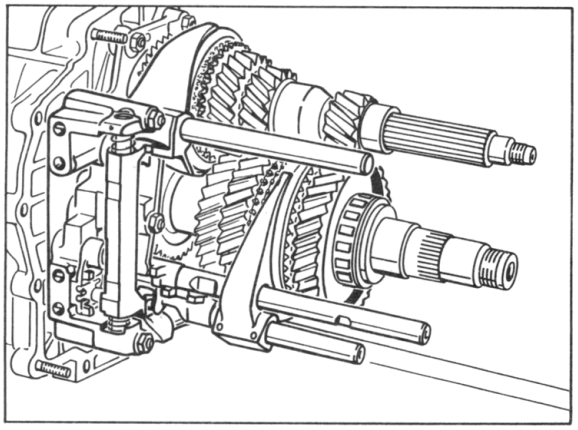

507-34

3. Adjust the selector fork for 5th and reverse gear. Adjust the selector sleeve over the selector fork 5/R so that it remains centered in idle position.

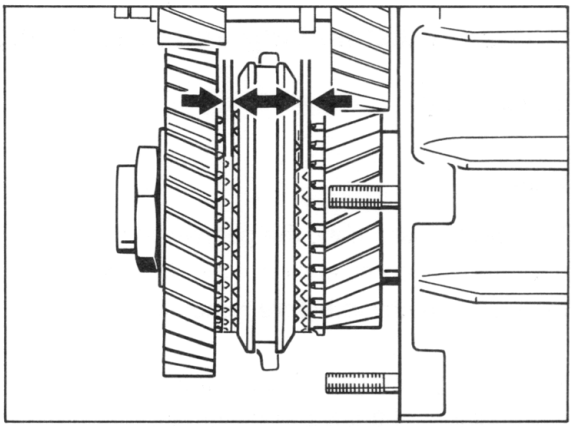

508-34

4. Adjust the internal selector rod with eccentric bush (no. 4) by undoing the clamping plate hex screws and turning the eccentric bush so that all gears may be preselected freely without binding.

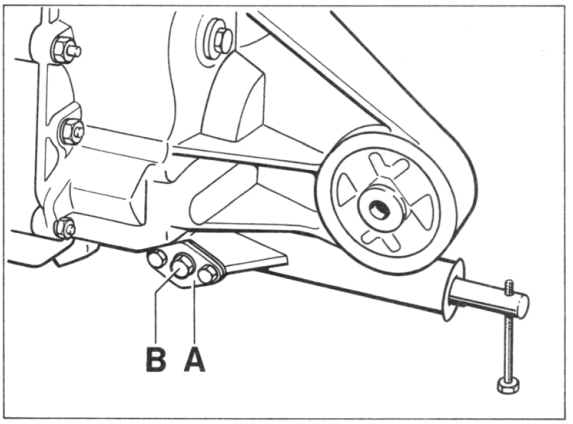

527-34

A = Clamping plate
B = Eccentric bush

5. To check gear selection, engage all gears one after another. To facilitate this check, screw a long M 8 into the internal selector rod.

Removing and installing input shaft oil seal

Removing

1. Remove engine/transmission assembly and separate transmission from engine.

2. Remove release bearing guide tube.

3. Screw Special Tool **9251** firmly into the oil seal.

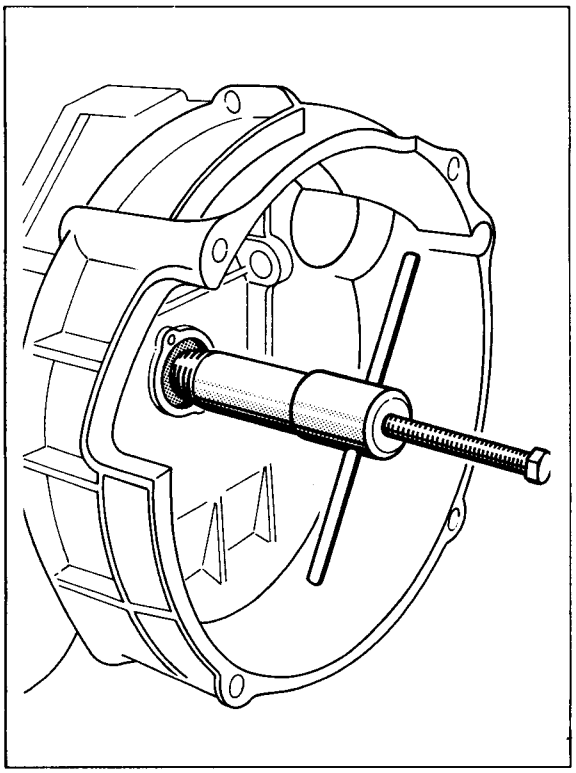

4. Screw in the hex bolt and pull out oil seal.

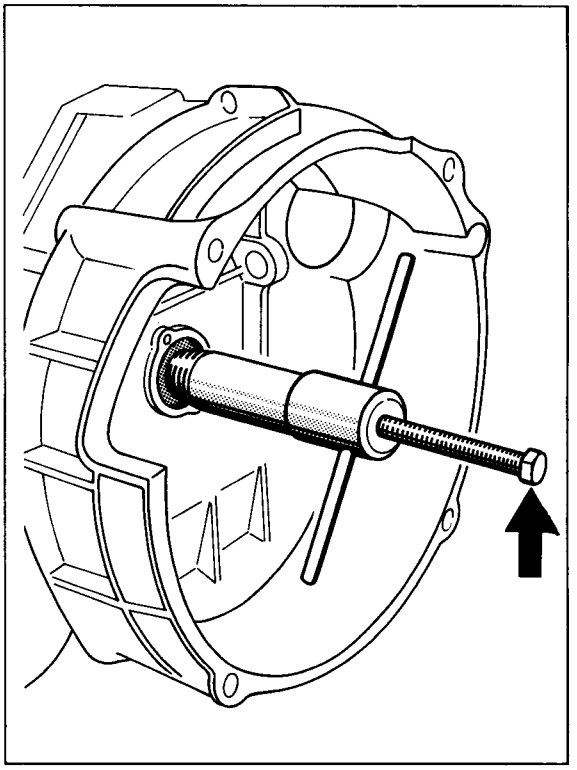

Note

If the helical tension spring jumps out when removing the seal, use a wire hook to pull it off the input shaft.

Printed in Germany – IX, 1990

Installing

1. Push assembling sleeve **9255** onto the input shaft splines.

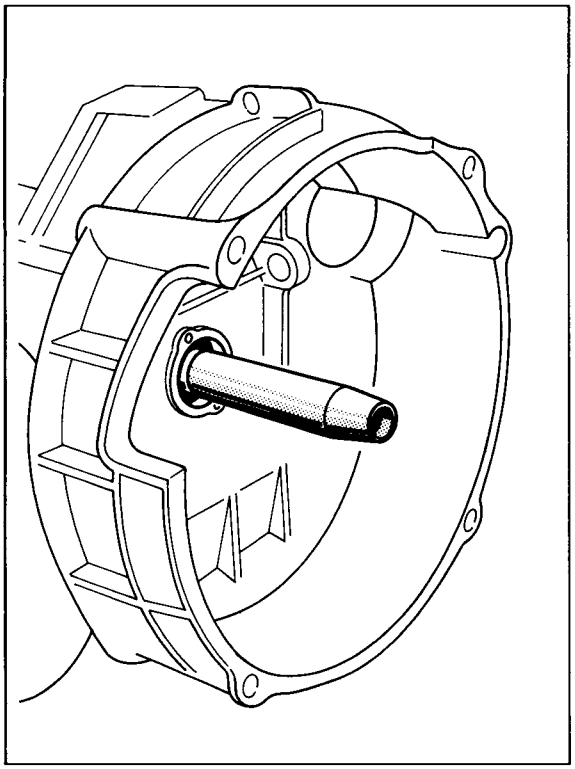

2. Pack the oil seal area between dust lip and sealing lip with grease (e.g. Silubrin Grease S manufactured by Klüber).

3. Use Special Tool **9256** to drive the oil into place.

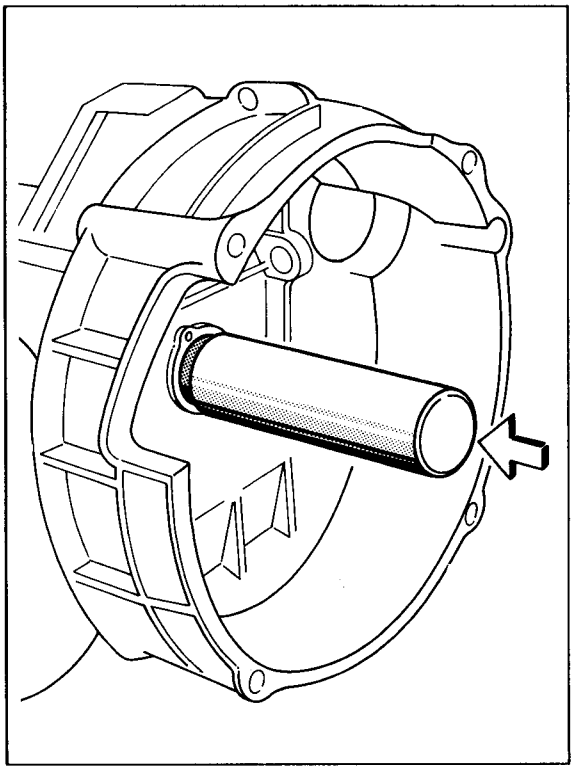

4. Install guide tube and tighten mounting screws to **10 Nm** (7.3 ft.lb).

Printed in Germany – IX, 1990

Dismantling and assembling tensioning plate

Printed in Germany – IX, 1990

Dismantling and assembling tensioning plate

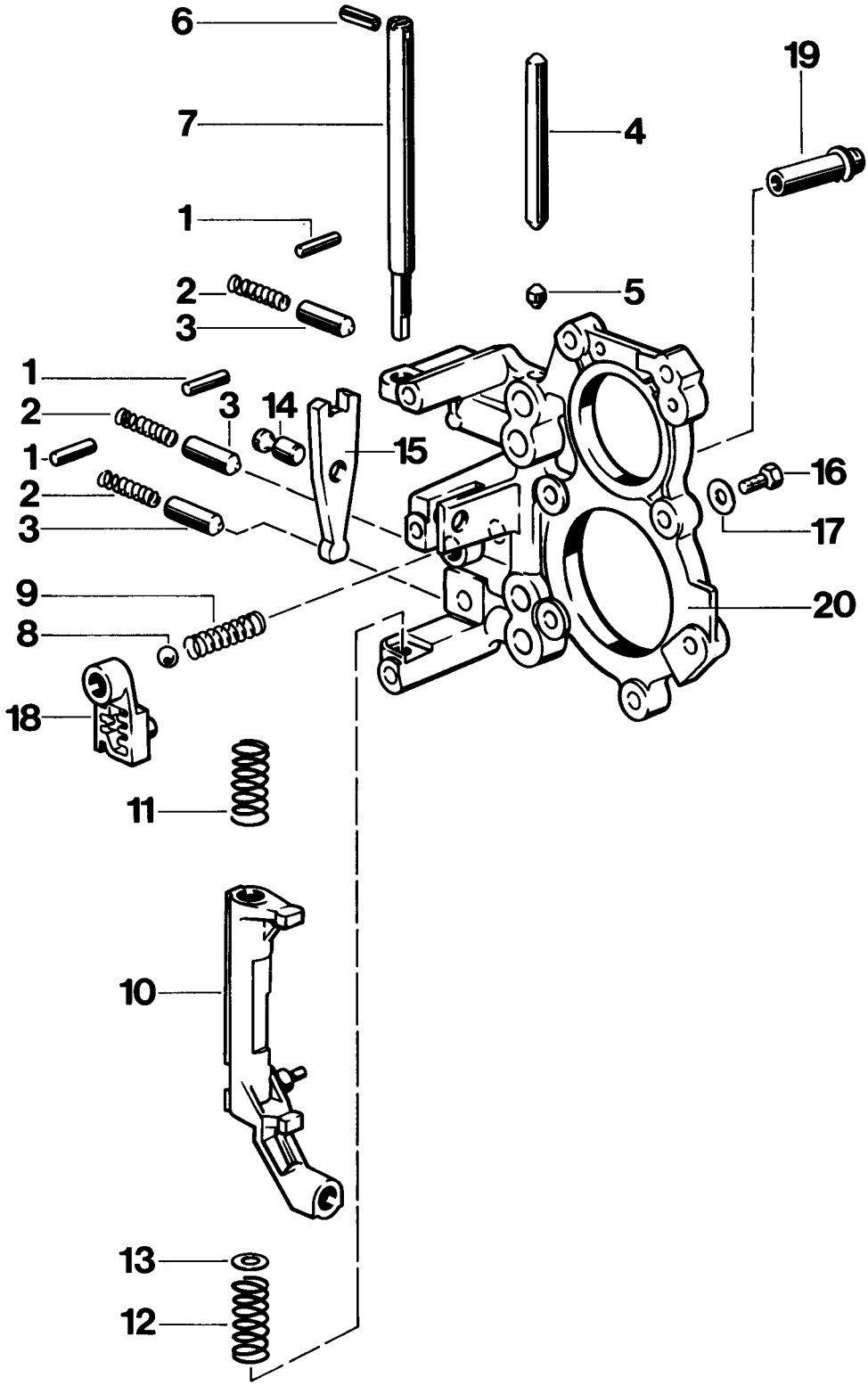

522-34

No.	Designation	Qty.	Note: Removal	Installation
1	Parallel pin	3	When the selector rods are installed, springs (No.2) are under tension	
2	Compression spring	3		
3	Locking sleeve	3		
4	Lock	1		
5	Lock	1		
6	Dowel pin	1		
7	Bearing shaft	1		Install in correct position, use mandrel (dia. 8 mm) to secure to tensioning plate bore
8	Ball	1		
9	Compression spring	1		
10	Reversing lever	1		
11	Compression spring	1	Mark for refitting	Free length = 33.9 + 0.5 mm, wire thickness = 1.6 mm. Do not confuse with spring no. 12
12	Pressure spring	1	Mark for refitting	Free length = 55.2 + 0.5 mm, wire thickness = 1.5 mm. Do not confuse with spring no. 11
13	Shim	1		
14	Bolt	1		Install in correct position, use mandrel (dia. 8 mm) to secure to tensioning plate bore
15	Reversing lever	1		
16	Hex bolt	1		Torque: 10 Nm (7.3 ft.lb)

Printed in Germany – IX, 1990

No.	Designation	Qty.	Note: Removal	Installation
17	Washer	1		
18	Selector gate	1		
19	Sleeve with snap ring	1	Press out with suitable drift	Press in to stop with suitable drift
20	Tensioning plate	1		

Installation position of the locks

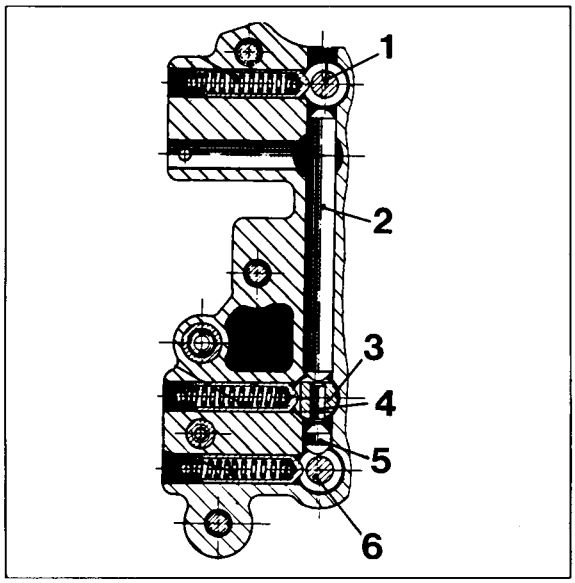

160-35

Dismantling and assembling front transmission cover

Tools

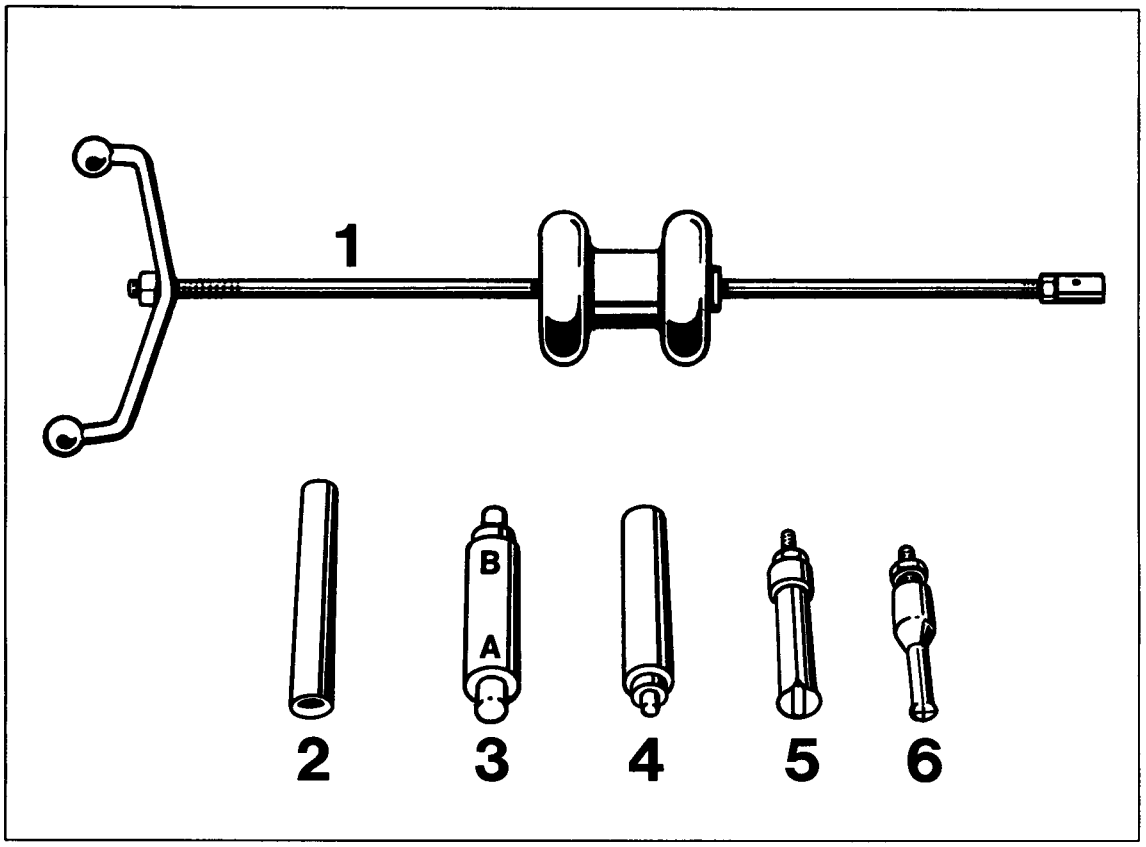

534-34

No.	Designation	Special tool	Order number	Explanation
1	Punch	VW 781		
2	Pipe section	VW 423		
3	Drift	9254	000.721.925.40	
4	Drift	9298	000.721.929.80	
5	Internal puller	-	-	Standard (e.g. Kukko 21/4)
6	Internal puller	-	-	Standard (e.g. Schrem 14 - 20)

Printed in Germany – IX, 1990

Dismantling and assembling front transmission cover

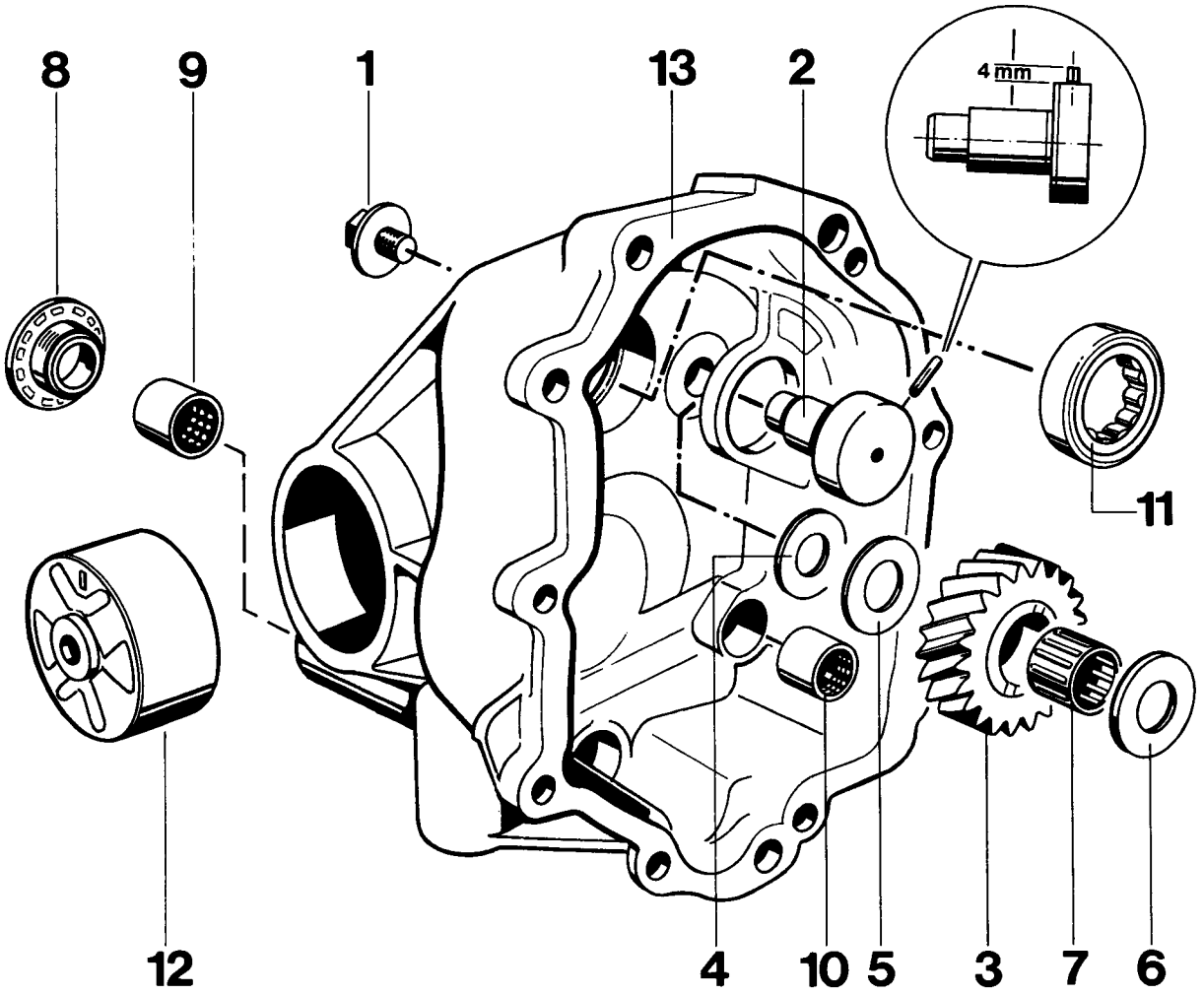

No.	Designation	Qty.	Note: Removal	Installation
1	Hex bolt	1		Torque: 35 Nm (25.7 ft.lb)
2	Bolt with pin	1		Insert in correct position
3	Reverse idler gear	1		
4	Thrust washer (2.0 mm)	1		
5	Thrust washer (1.5 mm)	1		Do not confuse with washer no. 4
6	Thrust washer (1.5 mm)	1		Do not confuse with washer no. 4
7	Needle-roller assembly	1		
8	Oil seal	1		Pack the area between dust lip and sealing lip with grease (e.g. Silubrin Grease S manufactured by Klüber); press in to stop with drift 9254 (page A)
9	Ball sleeve (long)	1	Press out from the inside, using a suitable pipe section (e.g. VW 423) and drift 9298	Press in to stop with Special Tool 9254 (page B)
10	Ball sleeve (short)	1	Pull out with a suitable internal puller (e.g. Schrem 14 - 20) and punch VW 771	Press in to stop with Special Tool 9254 (page A)
11	Cylindrical roller bearing	1	Pull out with suitable internal puller (e.g. Kukko 21/4) and punch VW 771	
12	Transmission bearing	1	Press out with suitable pipe section	Press in to correct position
13	Front transmission cover	1		

Printed in Germany – IX, 1990

Notes on assembly

1. Press in ball sleeves, oil seal and transmission bearing to correct position.

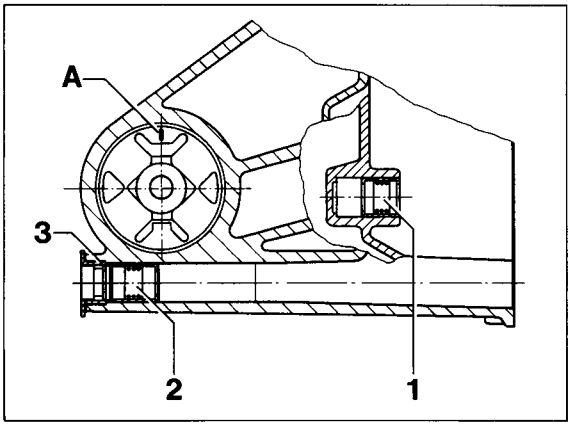

526-34

1 - Short ball sleeve (press in flush)

2 - Long ball sleeve (press in to correct position)

3 - Oil seal

A - Assembly mark (must point upwards)

2. Reassemble reverse idler gear with thrust washers and bolt in correct position (refer to exploded view). With thrust washers and bolt located correctly, the axial end play of the reverse idler gear is 0.15 to 0.35 mm.

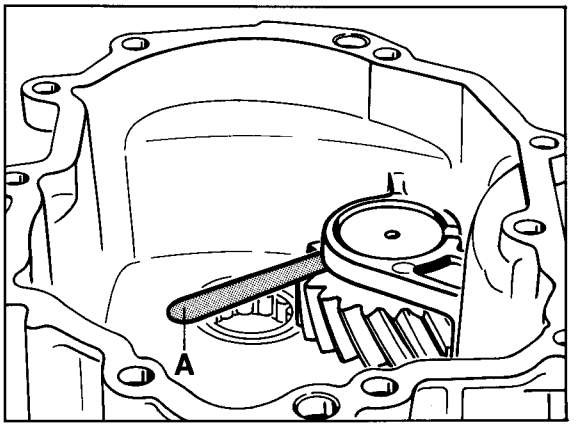

520-34

A = Feeler gauge

3. Check axial play of reverse idler gear with feeler gauge.

Printed in Germany – IX, 1990

Dismantling and assembling gear housing

Tools

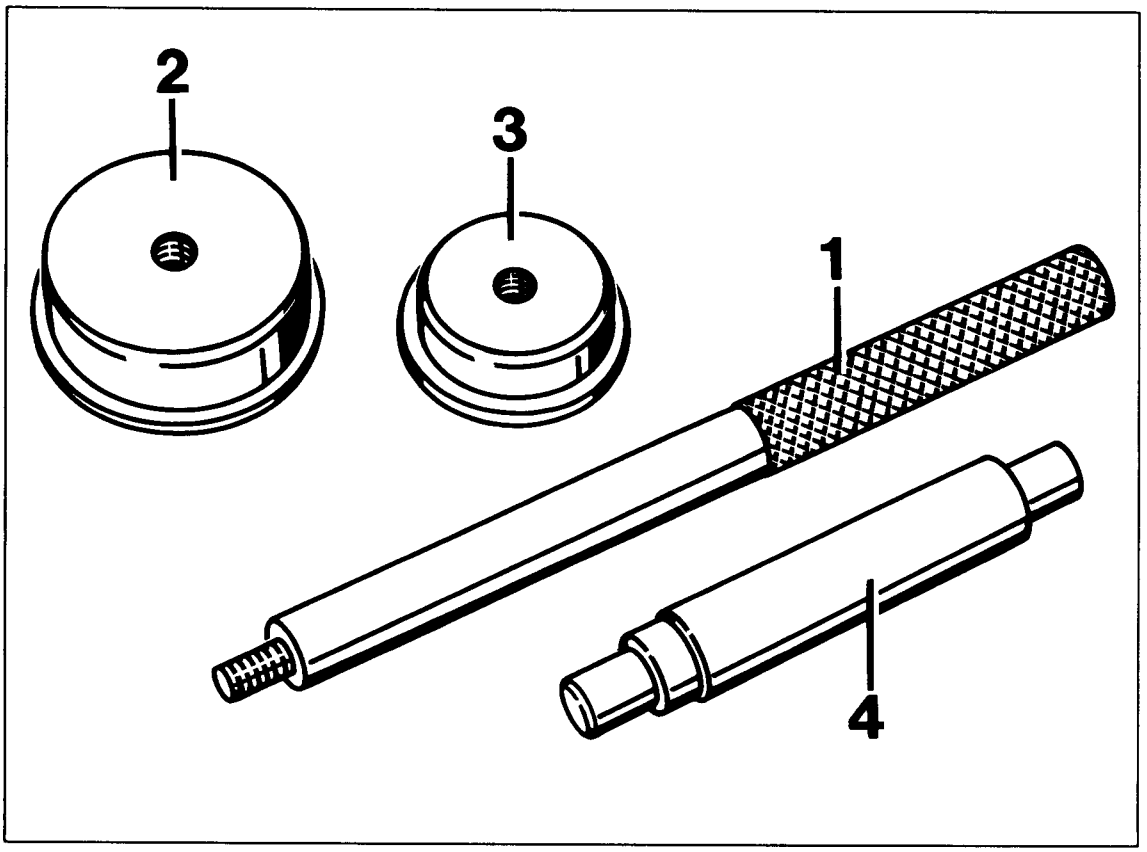

512-34

No.	Designation	Special tool	Order number	Explanation
1	Mandrel	P 254	000.721.254.00	
2	Thrust piece	P 254 a	000.721.254.10	
3	Thrust piece	P 254 b	000.721.254.20	
4	Drift	9254	000.721.925.40	

Printed in Germany – IX, 1990

Dismantling and assembling gear housing

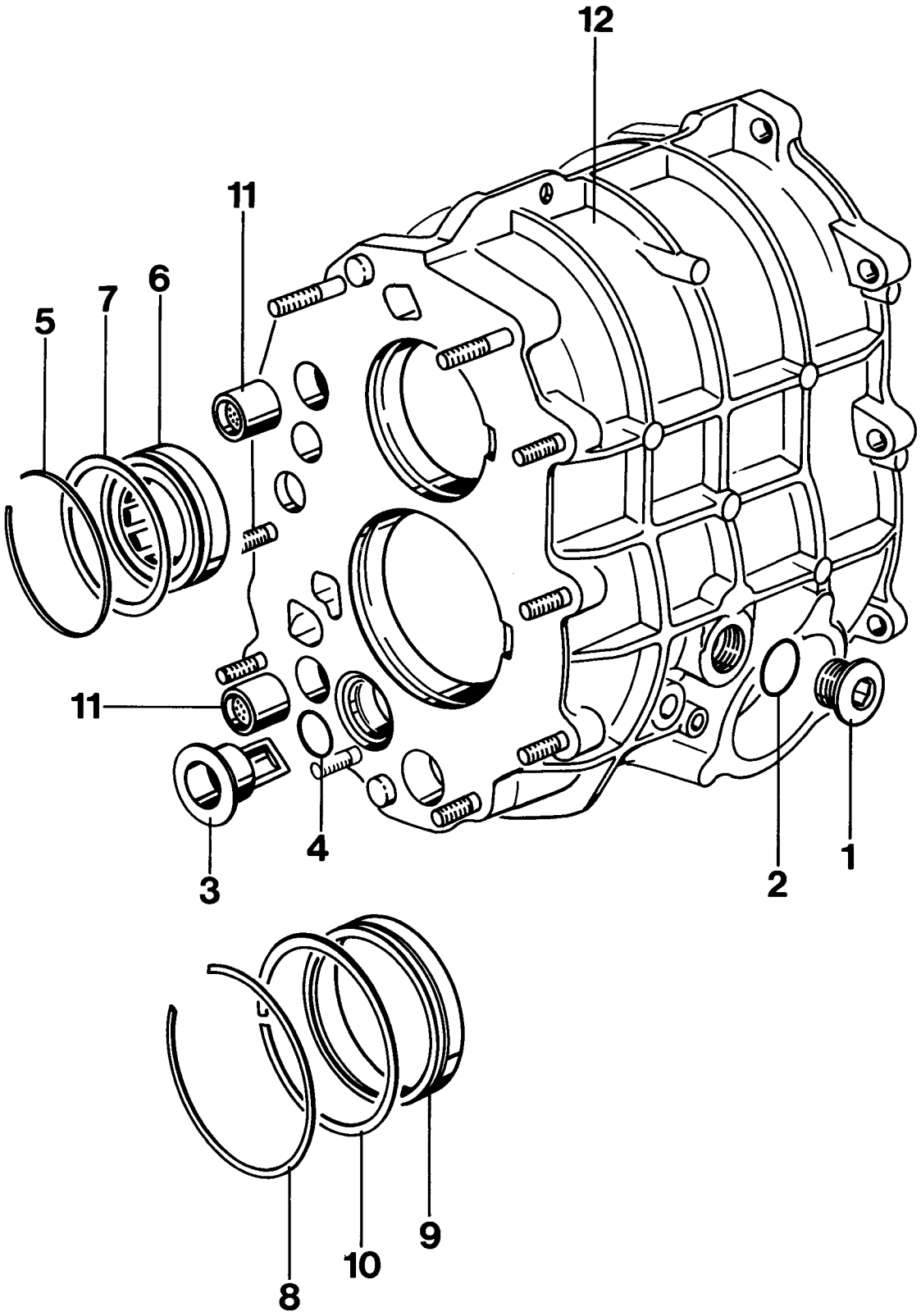

513-34

No.	Designation	Qty.	Note: Removal	Installation
1	Plug	1		Torque: 30 Nm (22 ft.lb)
2	Seal	1		Replace
3	Oil delivery tube	1		Insert in correct position
4	O-ring	1	Replace	
5	Retaining ring	1	Remove with a suitable screwdriver	
6	Cylindrical roller bearing	1	Use Special Tools P 254 and 254 b to press out bearing from inside over the outer race	Heat gearbox to approx. 120 °C and use Special Tools P 254 and P 254 b to press in bearing over the outer race
7	Snap ring	1		
8	Retaining ring	1	Remove with suitable screwdriver	
9	Bearing outer race	1	Working from inside, press out with Special Tools P 254 and P 254 a	Press in with Special Tools P 254 and P 254 a
10	Snap ring	1		
11	Ball sleeve	2	Press out with suitable mandrel	Press in flush with Special Tool 9254
12	Gear housing	1		

Printed in Germany – IX, 1990

Dismantling and assembling transmission case

Tools

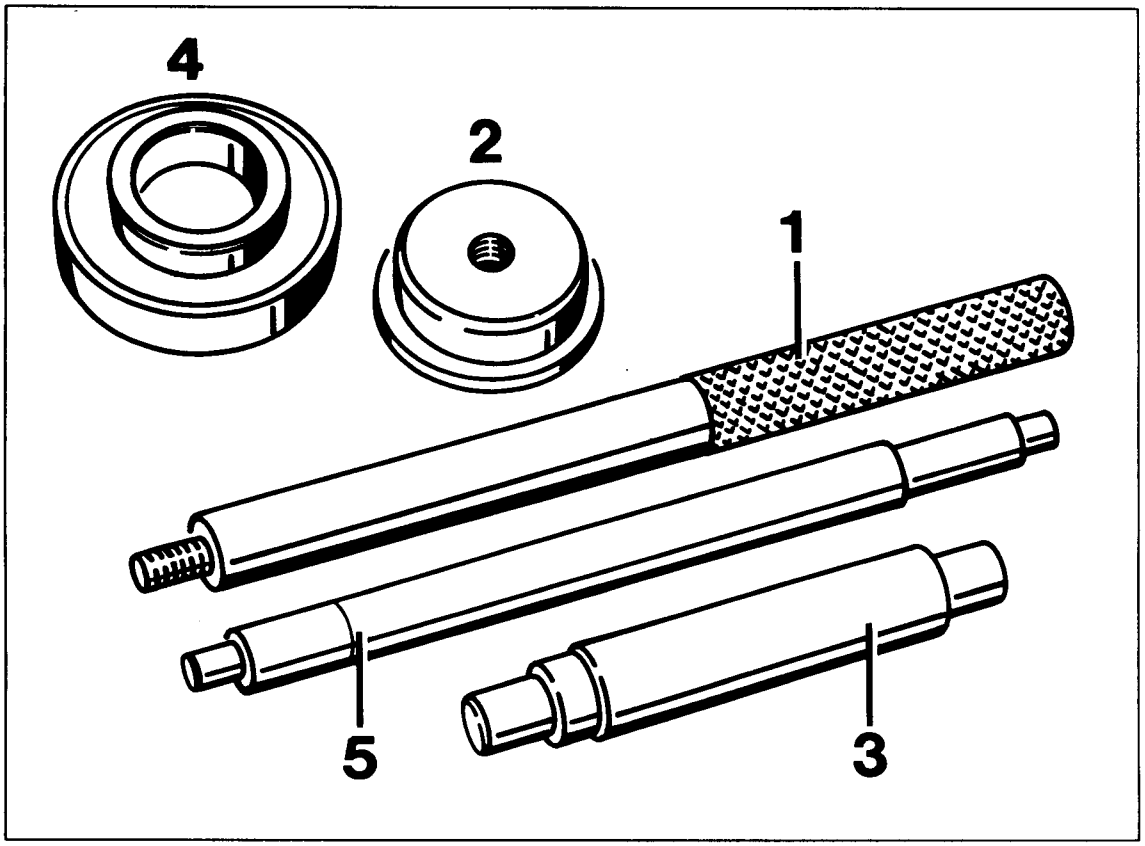

514-34

No.	Designation	Special tool	Order number	Explanation
1	Mandrel	P 254	000.721.254.00	
2	Thrust piece	P 254 b	000.721.254.20	
3	Drift	9254	000.721.925.40	
4	Thrust piece	9252	000.721.925.20	
5	Drift	9515	000.721.951.50	

Printed in Germany – IX, 1990

Dismantling and assembling transmission case

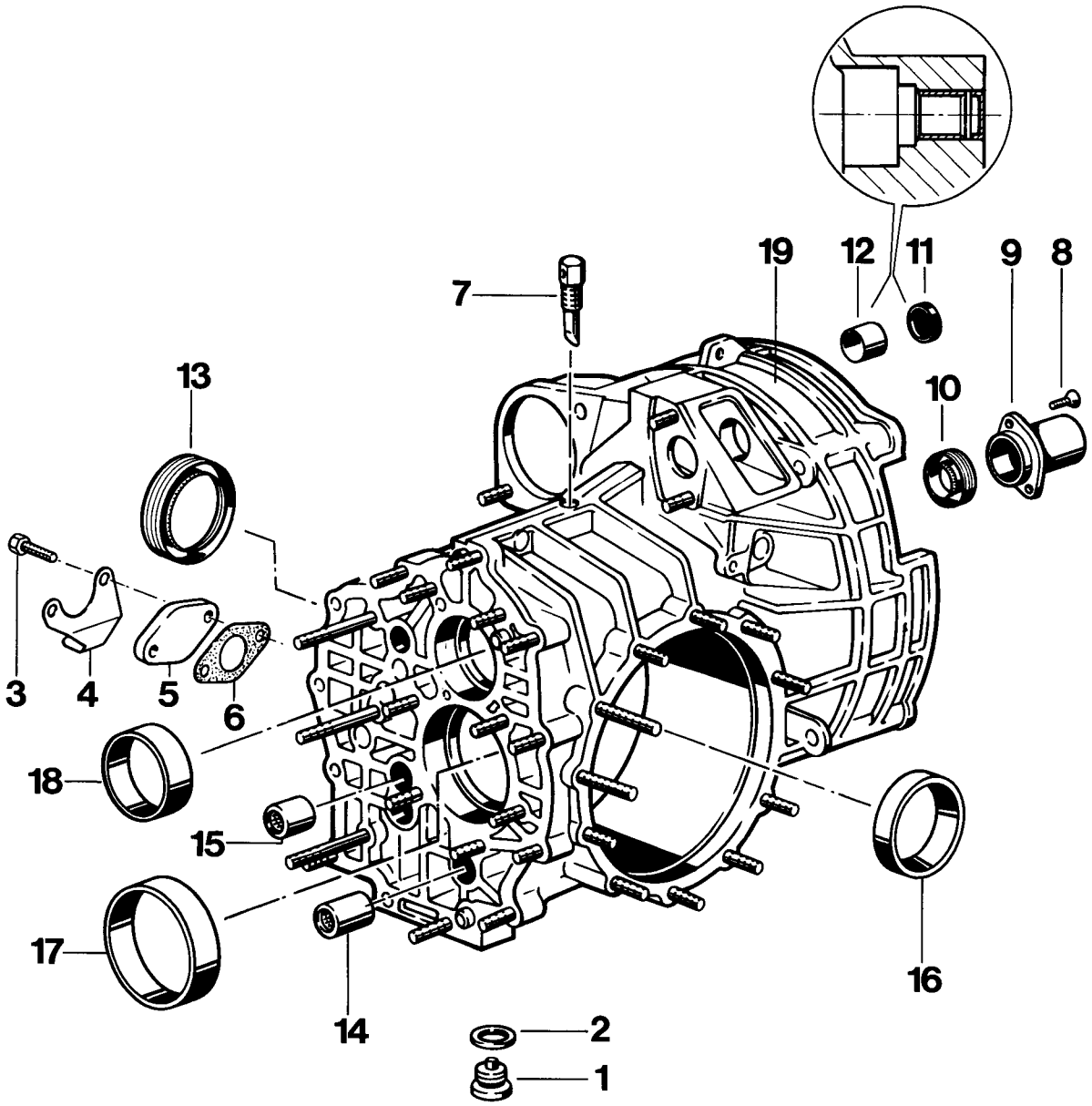

Printed in Germany – IX, 1990

No.	Designation	Qty.	Note: Removal	Installation
1	Plug	1		Clean, tighten to 30 Nm (22 ft.lb)
2	Seal	1		Replace
3	Hex screw	2		Torque: 23 Nm (16.9 ft.lb)
4	Bracket	1		
5	Flange	1		
6	Gasket (or Loctite 573)	1		Replace
7	Breather	1		Torque: 35 Nm (25.7 ft.lb). The bore in the hex head must face the front transmission cover
8	Oval head screw	2		Torque: 10 Nm (7.3 ft.lb)
9	Guide tube	1		
10	Oil seal	1		Do not install until after fitting the gear set (refer to page 34-209)
11	Cover plate	1		
12	Bushing	1	Working from inside, press out with drift 9515	Do not grease or oil and do not clean with solvents (e.g. naphtha). Use drift 9515 to press in to stop from inside.
13	Oil seal	1		Use Special Tool 9252 to press in to stop. Pack area between dust lip and sealing lip with grease (e.g. Silubrin Grease S manufactured by Klüber)
14	Ball sleeve (long)	1	Pull out with suitable internal puller (e.g. Schrem 14-20)	Press in flush with Special Tool 9254

Printed in Germany – IX, 1990

No.	Designation	Qty.	Note: Removal	Installation
15	Ball sleeve (short)	3	Pull out with suitable internal puller (e.g Schrem 14-20)	Press in flush with Special Tool 9254
16	Bearing outer race	1	Heat transmission case to approx. 120° C and drive out with suitable drift	Heat transmission case to approx. 120° C and press in with suitable thrust piece
17	Bearing outer race	1	Heat transmission case to approx. 120° C and drive out with suitable drift	Heat transmission case to approx. 120° C and use suitable thrust piece (e.g. VW 204 b) to press in to stop
18	Bearing outer race	1	Heat transmission case to approx. 120° C and pull out with suitable internal puller (e.g. Schrem 50-60)	Heat transmission case to approx. 120° C and use Special Tools P 254 and 254 b to press in to stop
19	Transmission case	1		

Dismantling and assembling input shaft

Tools

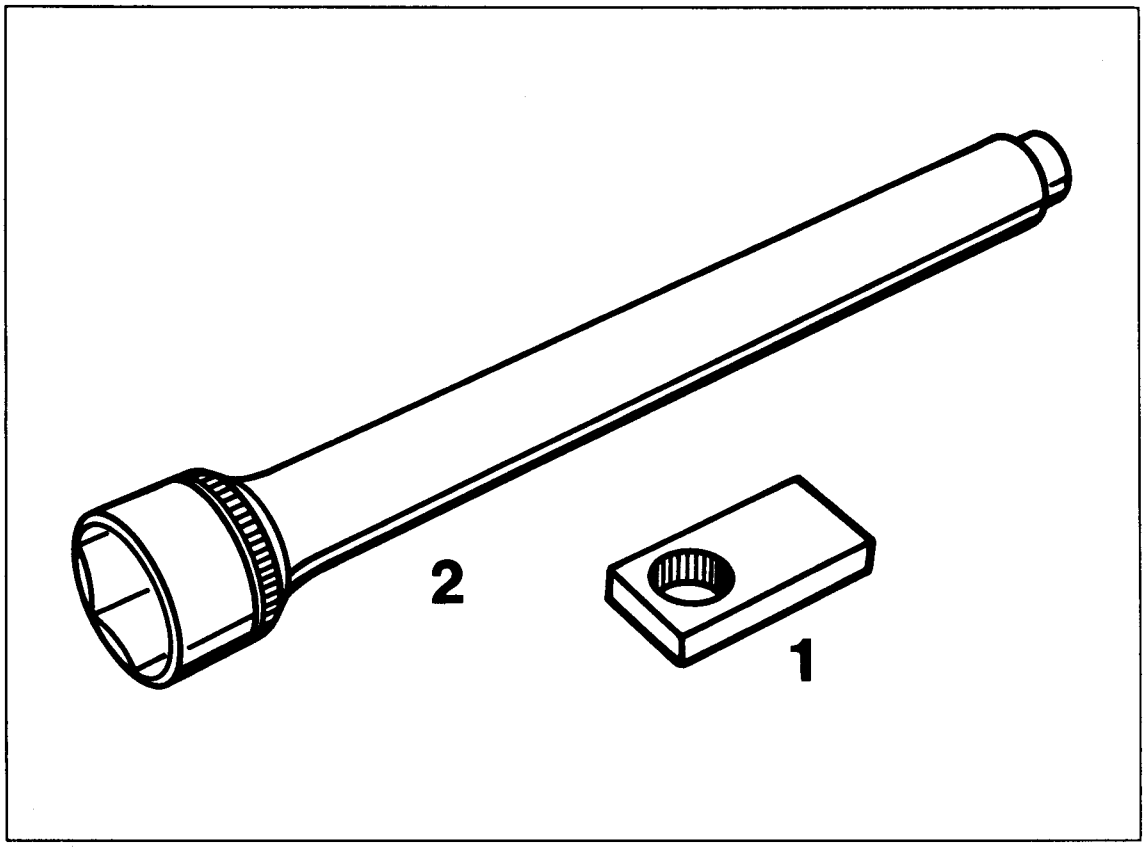

516-35

No.	Designation	Special tool	Order number	Explanation
1	Retainer plate	9177	000.721.917.70	
2	Socket	9105	000.721.910.50	

Printed in Germany – IX, 1990

Dismantling and assembling input shaft

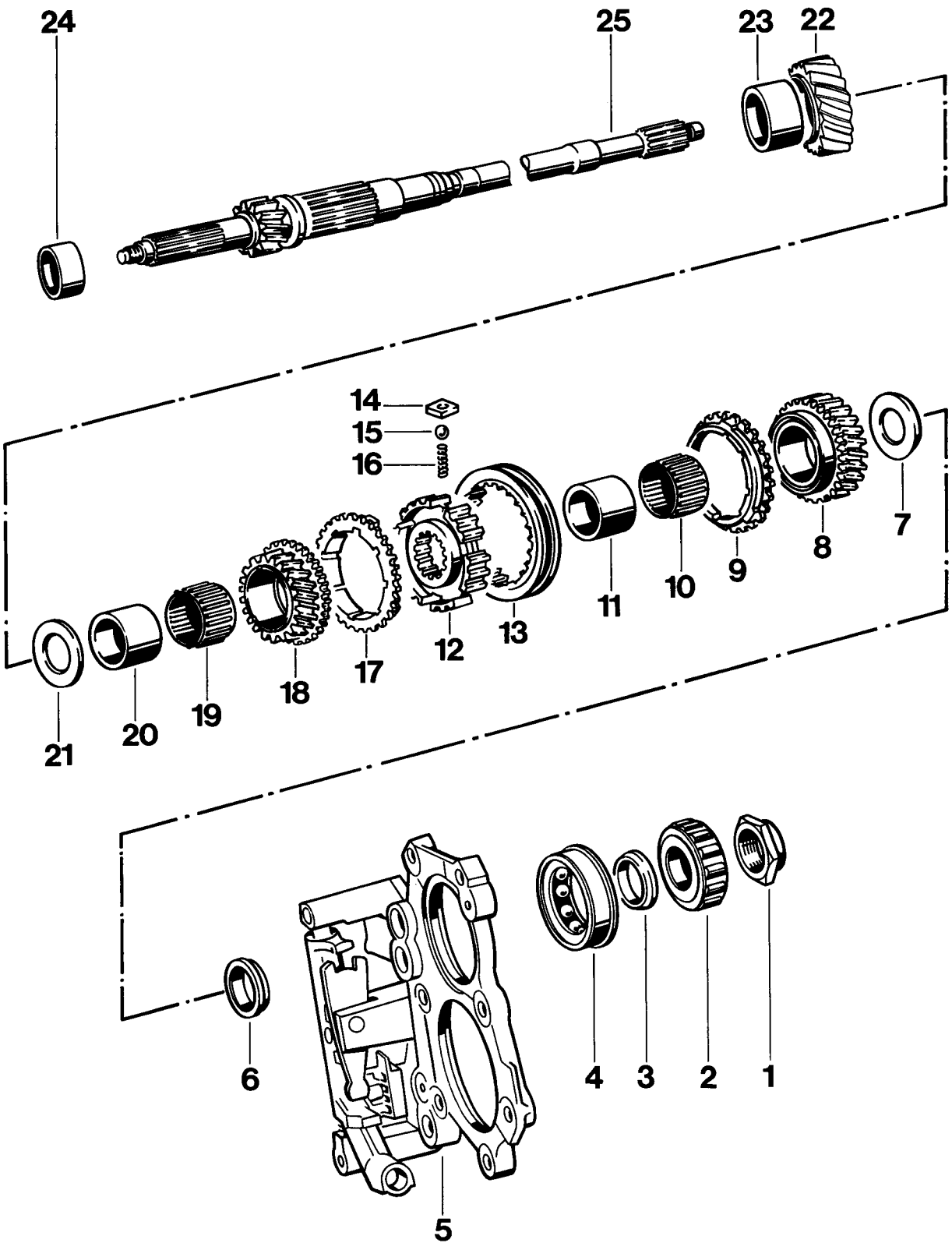

524-35

Printed in Germany – IX, 1990

No.	Designation	Qty.	Note: Removal	Installation
1	Collar nut	1	Undo with Special Tools 9177 and 9105	Use Special Tools 9177 and 9105. Torque: 250 Nm (183.25 ft.lb). Punch collar to lock
2	Cylindrical roller bearing	1	Press off with suitable tool (e.g. Kukko 17-1) over 2nd gear fixed wheel	Heat to approx. 120° C and press on with suitable pipe section
3	Bearing inner race	1	Press off with suitable tool (e.g. Kukko 17-1) over 2nd gear fixed wheel	Heat to approx. 120° C and press on with suitable pipe section
4	Four-point bearing	1		
5	Tensioning plate	1		Mount in vice (fit protective jaws), engage 5th gear, insert input shaft in selector rod / fork with dowels in place. Observe position of locks (refer to page 35 - 207)
6	Bearing inner race	1	Press off with suitable tool (e.g. Kukko 17-1)	Heat to approx. 120° C and press on with suitable pipe section
7	Thrust washer	1		Large, flat-ground side faces needle cage
8	Loose gear (4th gear)	1		Always replace as a pair
9	Synchronizing ring	1	Mark for refitting	Inspect for wear, assemble in correct position with the same gearwheel (cogs towards driver dogs)
10	Needle cage	1	Mark for refitting	Assemble with the same gearwheel

Printed in Germany – IX, 1990

No.	Designation	Qty.	Note: Remove	Installation
11	Inner race	1		Heat to approx. 120° C and press into position
12	Guide sleeve	1	Remove together with selector sleeve	Selector sleeve and guide sleeve are matched, install together with selector sleeve and synchronizing parts
13	Selector sleeve (3rd and 4th gear)	1	Spring-loaded synchronizing parts may jump out. Mark for refitting	Observe assembly position, install together with guide sleeve and synchronizing parts. Always replace in pairs
14	Driver dogs	3		Install in correct position, domed side faces selector sleeve
15	Ball	3		
16	Spring	3		Free length = 11.8 + 0.3 mm, wire thickness = 0.8 mm. Do not confuse with springs for 1st and 2nd gears
17	Synchronizing ring	1	Mark for refitting	Inspect for wear, assemble in correct position with the same gearwheel (cogs towards driver dogs)
18	Loose gear (3rd gear)	1		Always replace in pairs
19	Needle cage	1	Mark for refitting	Assemble with the same gearwheel
20	Inner race	1		Heat to approx. 120° C and press into position
21	Thrust washer (1.85 mm)	1		

Printed in Germany – IX, 1990

No.	Designation	Qty.	Note: Remove	Installation
22	Fixed gear (2nd gear)	1		Always replace in pairs. Collar faces spacer
23	Spacer	1		
24	Cylindrical roller bearing inner race	1	Press off with suitable tool (e.g. Kukko 17-0)	Heat to approx. 120° C and press into position
25	Input shaft	1		

Printed in Germany – IX, 1990

Notes on dismantling and assembling

Dismantling

1. Mount retaining plate **9177** in vice, fit input shaft and undo collar nut with Special Tool **9105**.

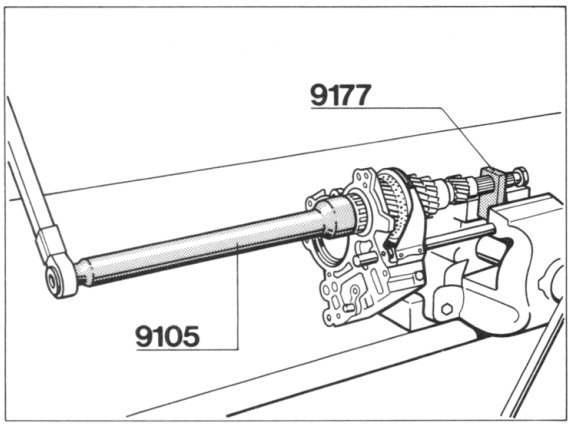

535-35

2. Use a suitable tool (e.g. Kukko 17 - 1) to press all parts off the input shaft over the 2nd gear wheel.

Assembling

1. Observe assembly position of selector sleeve. When assembling, the punch mark must be centered in relation to the driver dogs.

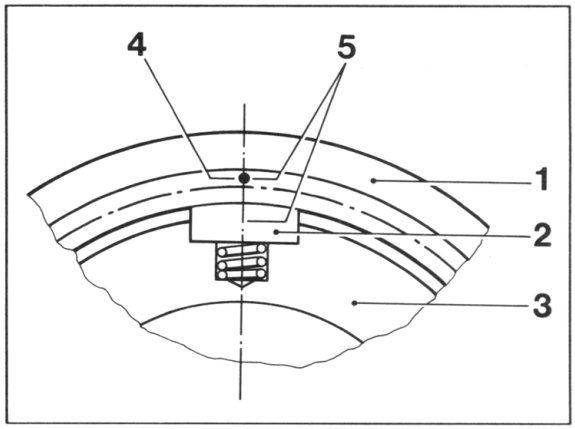

55-35

1 = Selector sleeve
2 = Driver dog
3 = Guide sleeve
4 = Punch mark
5 = Assembly position

Printed in Germany – IX, 1990

2. To inspect the synchronizing rings, press rings onto the gear wheel cones and use a feeler gauge to measure gap "A".

Assembly dimension (new) = 0.9 mm min.
Wear limit = 0.6 to 0.7 mm

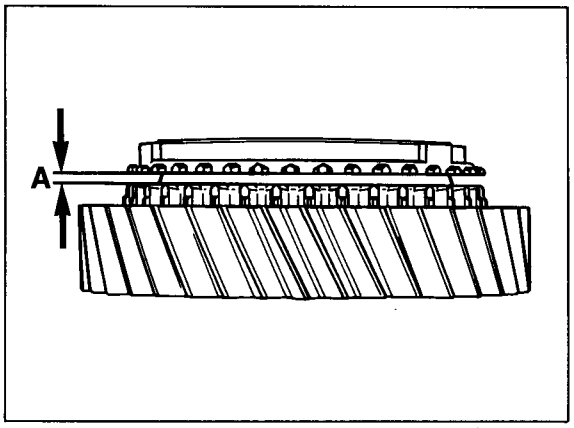

518-35

3. Observe assembly position of locks.

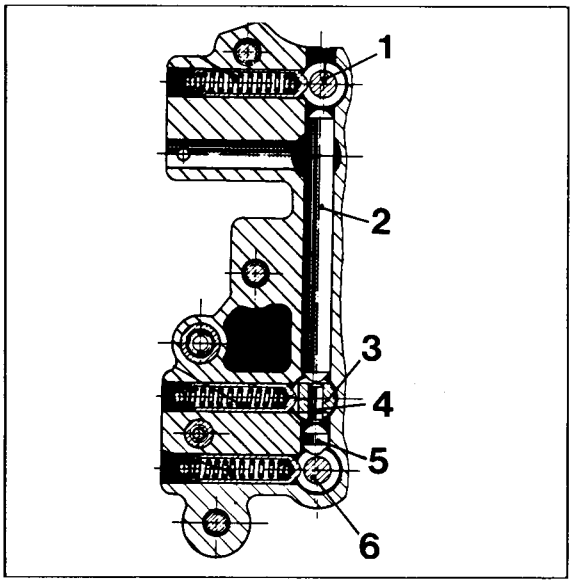

160-35

1 = Selector rod 3rd/4th
2 = Lock
3 = Selector rod 5th/R
4 = Lock
5 = Lock
6 = Selector rod 1/2

Printed in Germany – IX, 1990

Dismantling and assembling drive pinion

Printed in Germany – IX, 1990

Dismantling and assembling drive pinion

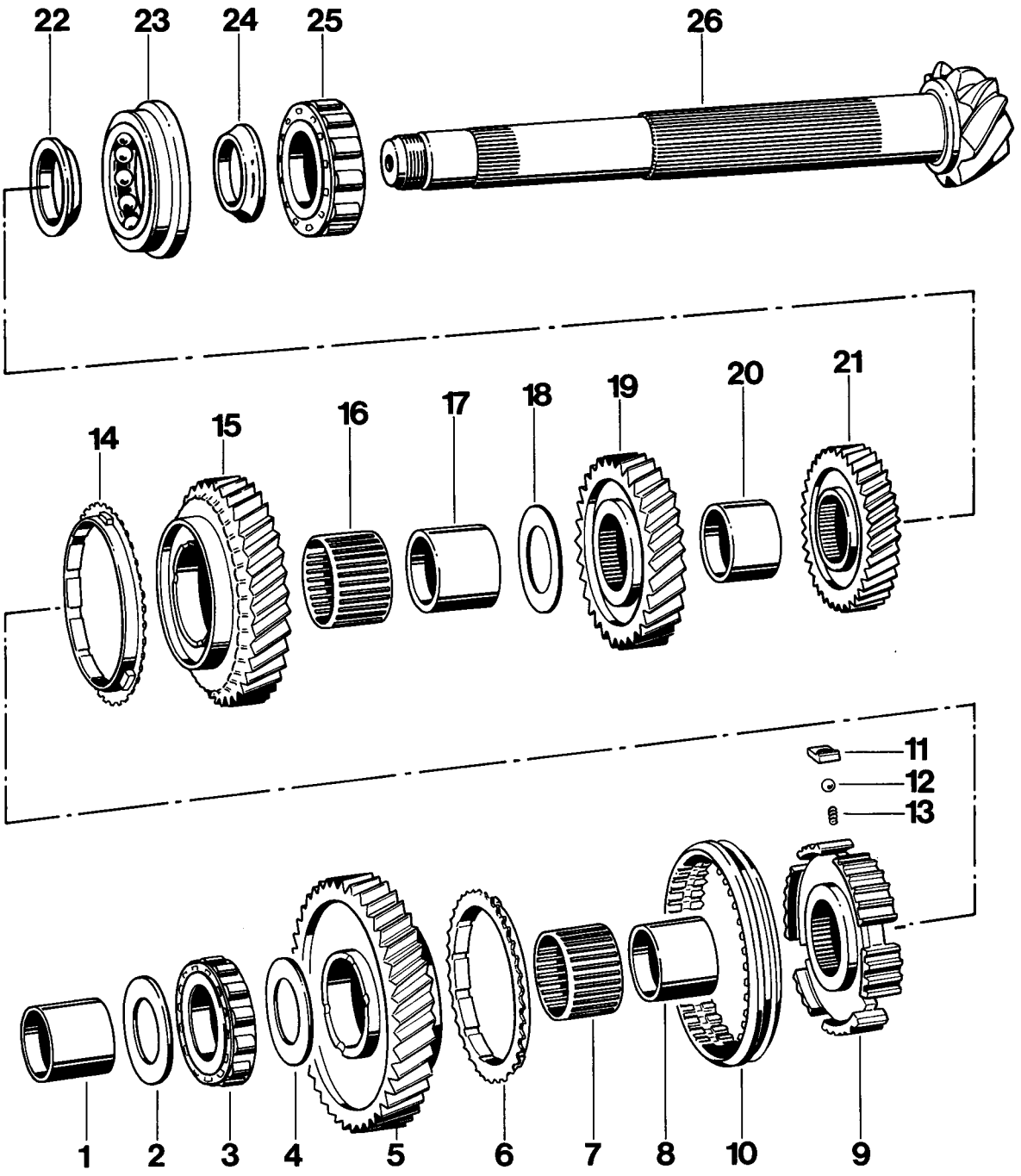

523-35

Printed in Germany – IX, 1990

No.	Designation	Qty.	Note: Removal	Installation
1	Inner race	1	Mark for refitting	Assemble with the same gearwheel. Heat to approx. 120° C
2	Thrust washer (2.8 mm)	1		
3	Cylindrical roller bearing	1		Heat to approx. 120° C
4	Thrust washer (2.8 mm)	1		
5	Loose gear (1st gear)	1		Always replace in pairs
6	Synchronizing ring	1	Mark for refitting	Check for wear, assemble in correct position with the same gearwheel (cogs towards driver dogs)
7	Needle cage	1	Mark for refitting	Reassemble with the same gearwheel
8	Inner race	1	Mark for refitting	Reassemble with the same gearwheel. Heat to approx. 120° C
9	Guide sleeve	1	Remove with selector sleeve	Always replace in pairs. Install together with selector sleeve and synchronizing parts
10	Selector sleeve (1st and 2nd gear)	1	Spring-loaded synchronizing parts may jump out	Always replace in pairs. Install together with guide sleeve and synchronizing parts
11	Driver dog (with guide nose)	3		Do not confuse with dog for 3rd to 5th and reverse gears
12	Ball	3		

Printed in Germany – IX, 1990

No.	Designation	Qty.	Note: Remove	Installation
13	Spring	3	Mark for refitting	Free length 10.7 ± 0.2 mm, wire thickness 0,9 mm. Do not confuse with springs for 3rd to 5th and reverse gears
14	Synchronizing ring	1	Mark for refitting	Check for wear, reassemble in correct position with the same gearwheel (cogs towards driver dogs)
15	Loose gear (2nd gear)	1		Always replace in pairs
16	Needle cage	1	Mark for refitting	Reassemble with the same gearwheel
17	Inner race	1	Mark for refitting	Reassemble with the same gearwheel
18	Thrust washer (1.4 mm)	1		
19	Fixed gear (3rd gear)	1		Always replace in pairs. Larger collar faces thrust washer
20	Spacer	1		
21	Fixed gear (4th gear)	1		Always replace in pairs. Larger collar faces four-point bearing
22	Bearing inner race	1	Mark for refitting. Press off with suitable tool (e.g. Kukko 15 - 17)	Do not confuse with inner race no. 24. Heat to approx. 120° C and press into position
23	Four-point bearing	1		
24	Bearing inner race	1	Mark for refitting. Press off with suitable tool (e.g. Kukko 15 - 17)	Do not confuse with inner race no. 22. Heat to approx. 120° C and press into position

Printed in Germany – IX, 1990

No	Designation	Qty.	Note: Removal	Installation
25	Cylindrical roller bearing	1	Press off with suitable tool (e.g. Kukko 15 - 17)	Heat to approx. 120° C and use a suitable pipe section (e.g. VW 519) to press into correct position
26	Drive pinion	1		Observe matching number. Readjust if necessary

Note

Items 1 through 20 are removed without removing the drive pinion.

Printed in Germany – IX, 1990

Notes on dismantling and assembling

Dismantling

Note

To facilitate reassembly, the drive pinion remains installed for part of the dismantling steps (refer to Dismantling and assembling transmission, on page 34 - 201)

Assembling

1. Mount tensioning plate with input shaft in vice (fit protective jaws) and reassemble drive pinion.

Note

All parts of the drive pinion must be assembled dry to ensure that no oil penetrated between the mating faces.
Check matching numbers on drive pinion and ring gear for reassembly. Both numbers must be identical.

2. Heat bearing inner race of four-point bearing to approx. 120° C and press into correct position.

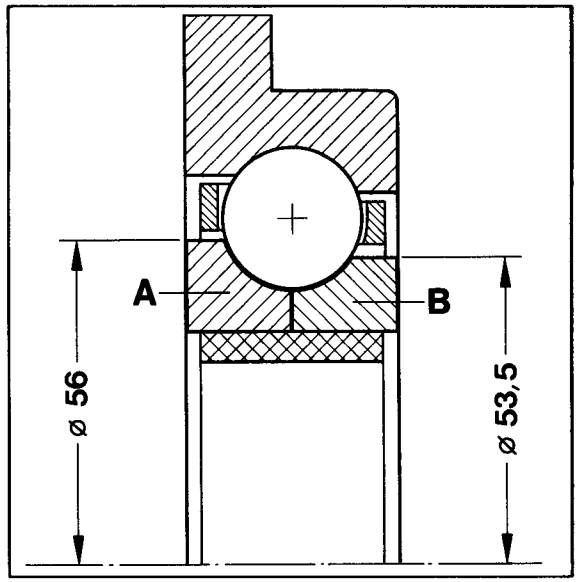

A = Large inner race (Outside diameter 56 mm), pointing towards pinion head when installed

B = Small inner race (outside diameter 53.5 mm), pointing towards 4th gear fixed gear.

Printed in Germany – IX, 1990

3. When installing the synchronizer driver dogs, the guide nose must face the selector sleeve. The nose may point either to the left or the right.

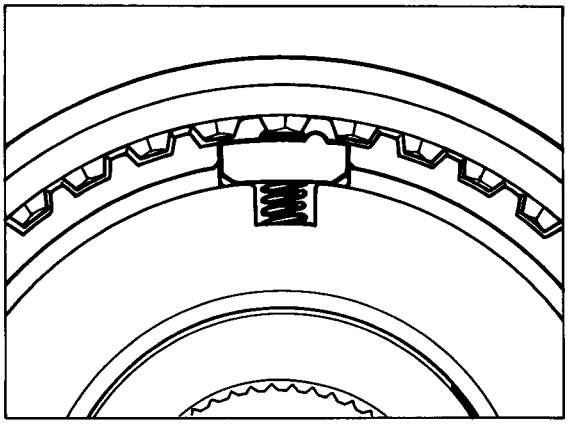

519-35

4. To check the synchronizer rings, press rings onto the gear cones and use a feeler gauge to measure gap "A".

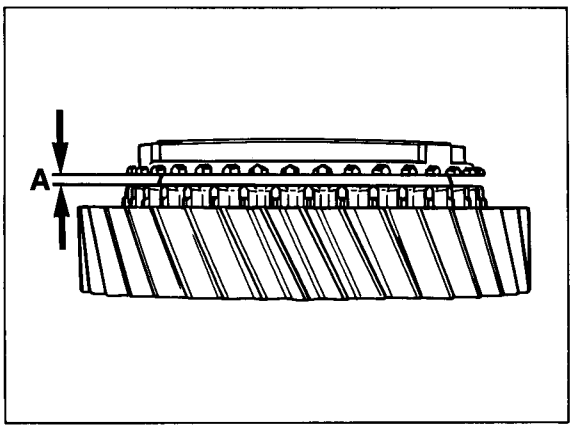

518-35

Assembly dimension (new) = 1.1 mm min.
Wear limit = 0.6 to 0.7 mm

Printed in Germany – IX, 1990

Removing and installing differential

Tool

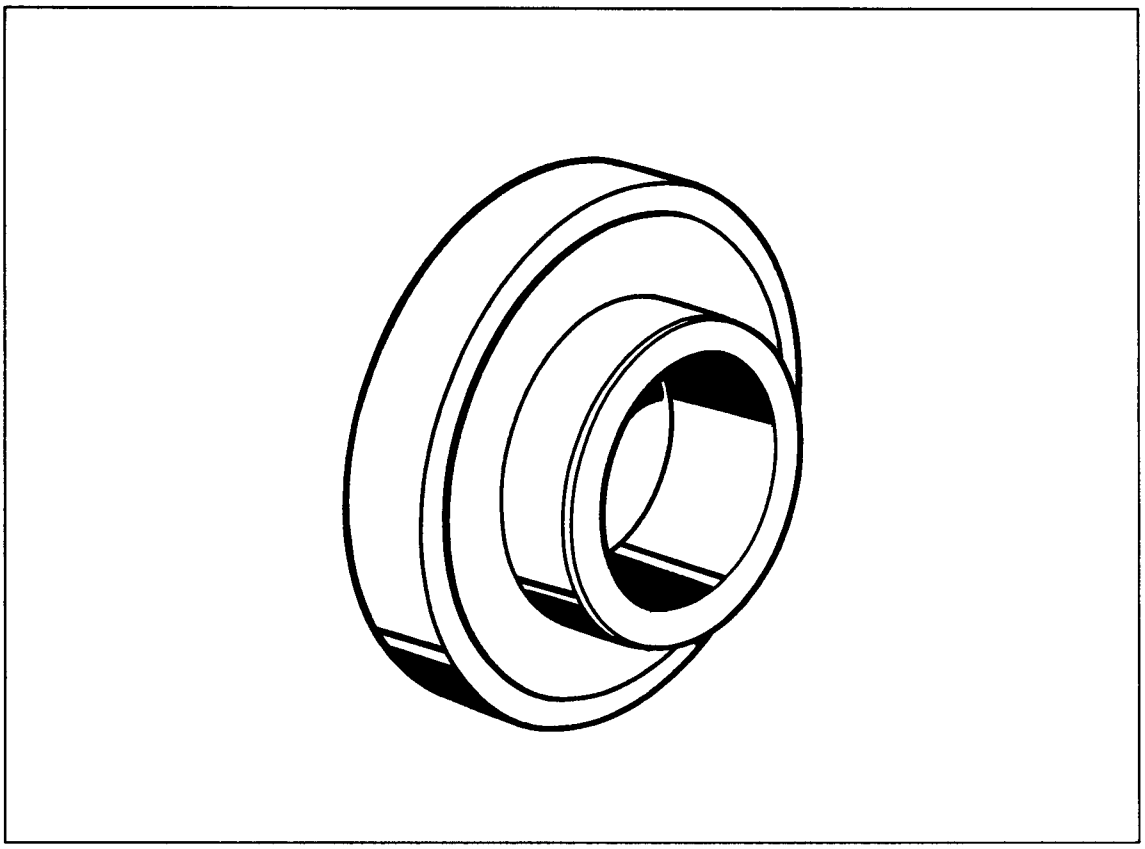

536-39

No.	Designation	Special tool	Order number	Explanation
	Thrust piece	9252	000.721.925.20	

Printed in Germany – IX, 1990

Removing and installing differential

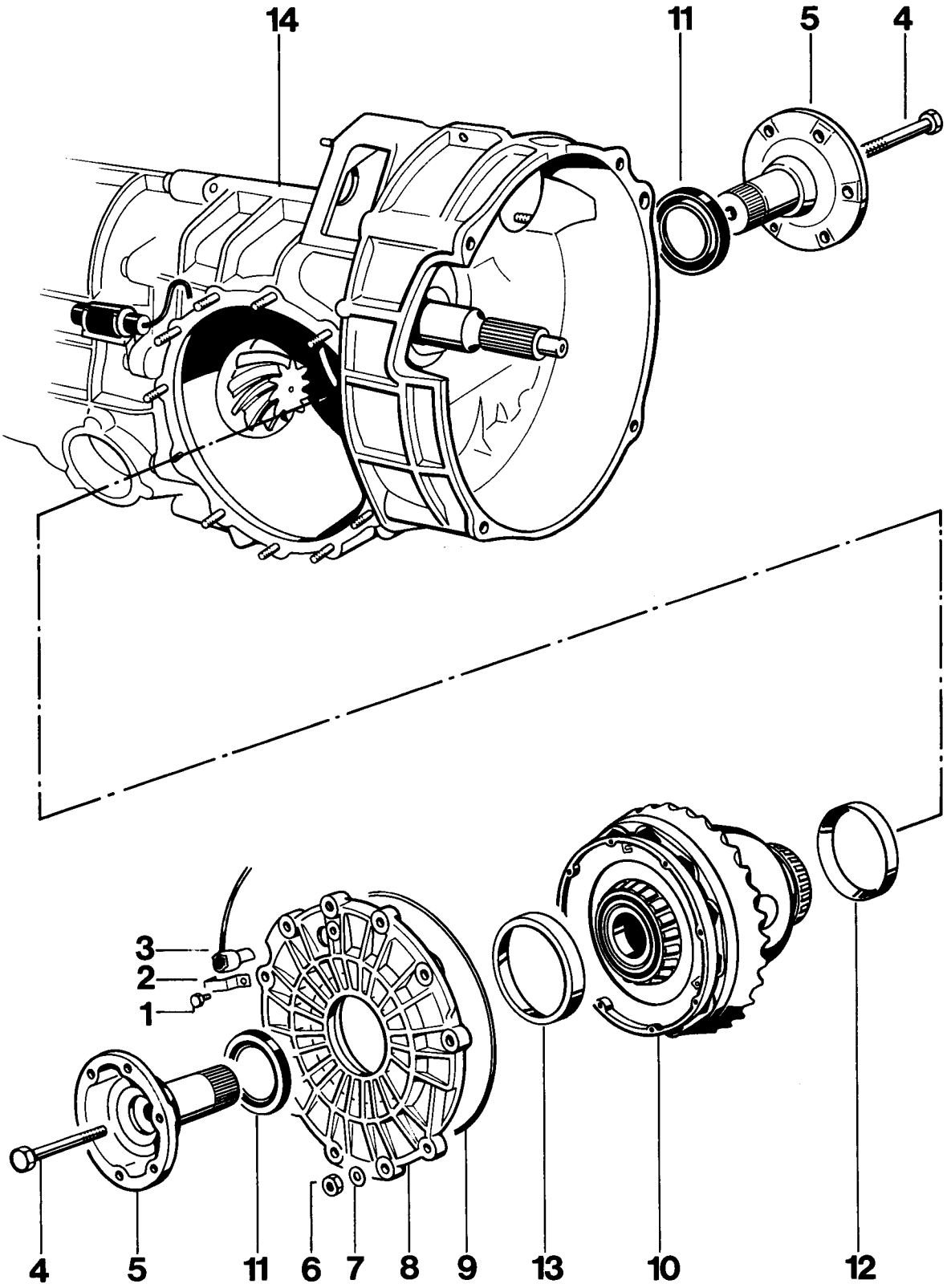

537-39

No.	Designation	Qty.	Note: Removal	Installation
1	Hex screw	1		Torque: 10 Nm (7.3 ft.lb)
2	Bracket	1		
3	Reed contact	1		
4	Hex screw	2		Torque: 44 Nm (32.3 ft.lb)
5	Halfshaft flange	2		
6	Hex nut	11		Torque: 23 Nm (16.9 ft.lb)
7	Washer	11		
8	Cover	1		
9	O-ring	1		Fit replacement, oil lightly
10	Differential or limited slip differential	1		Adjust if necessary
11	Oil seal	2		Pack area between dust lip and sealing lip with grease (e.g. Silubrin Grease S manufactured by Klüber). Drive in with thrust piece 9252 until seated
12	Bearing outer race	1	Heat transmission case to approx. 120° C and drive out with suitable drift	Heat transmission case to approx. 120° C and press in with suitable thrust piece
13	Bearing outer race	1	Heat transmission cover to approx. 120° C and remove with suitable internal puller (e.g. Kukko 21-9)	Heat transmission side cover to approx. 120° C and press in with suitable thrust piece
14	Transmission case			

Printed in Germany – IX, 1990

Dismantling and assembling differential

Tools

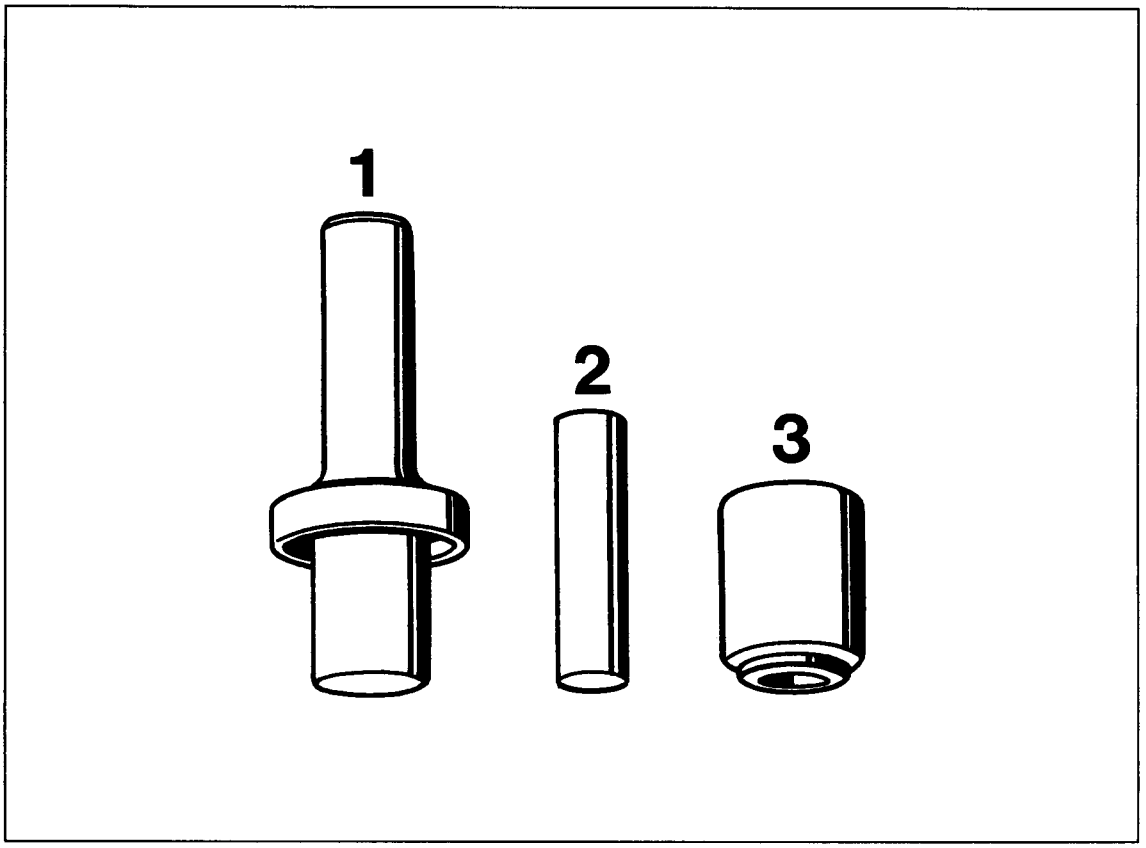

538-39

No.	Designation	Special tool	Order number	Explanation
1	Thrust piece	P 264 b	000.721.264.20	
2	Centering mandrel	9289	000.721.928.90	
3	Thrust piece	P 263	000.721.263.00	

Printed in Germany – IX, 1990

Dismantling and assembling differential

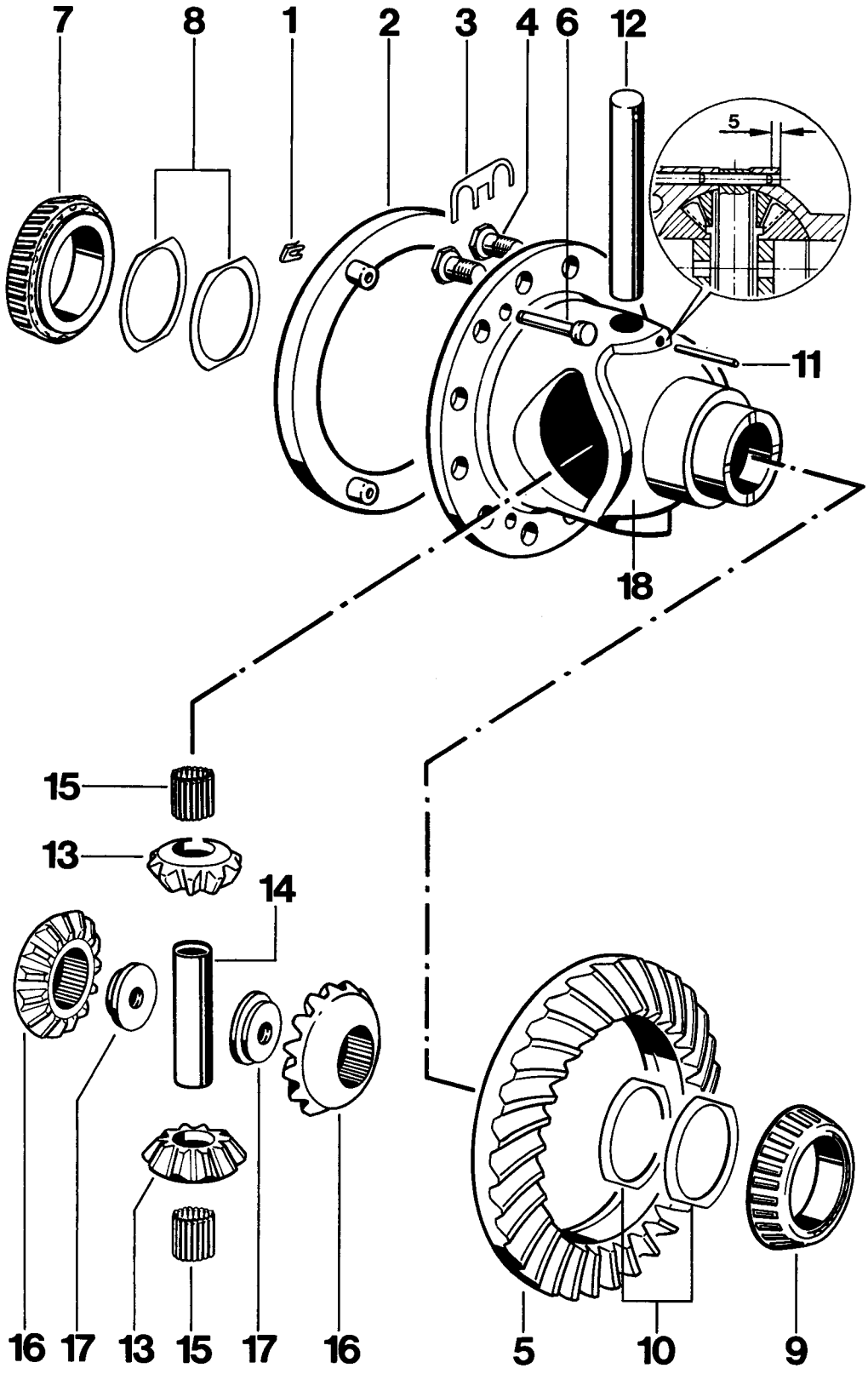

528-39

No.	Designation	Qty.	Note: Removal	Installation
1	Retainer	3		
2	Magnet carrier plate	1		
3	Tab washer	6		Fit replacement. Push into groove of adjacent bolts, pinch tabs with pliers (to lock plate around bolt) and bend down on a hexagon flat
4	Hex bolt	12		Threads must be dry and free of grease. Torque: 150 Nm (110 ft.lb).
5	Ring gear	1		Threaded holes for ring gear bolts must be dry and free of grease. Note matching numbers. Read-just if necessary.
6	Pin	3		
7	Taper roller bearing inner race	1	Pull of with suitable puller and P 263	Press on with P 264 b
8	Shim	X	Mark for refitting	Redetermine thickness if necessary
9	Taper roller bearing inner race	1	Pull off with suitable puller and P 263	Press on with P 264 b
10	Shim	X	Mark for refitting	Redetermine thickness if necessary
11	Spiral pin	1		Drive in observing correct position
12	Pin	1		

Printed in Germany – IX, 1990

No.	Designation	Qty.	Note: Removal	Installation
13	Small differential bevel gear	2		Apply MoS2 paste to curved surface. Always replace as a set (with large differential bevel gears)
14	Spacer	1		
15	Needle roller sleeve (31 seperate needle rollers each)	2	Do not lose any needle rollers	To insert, coat with stiff grease
16	Large differential bevel gear	2		Apply MoS2 paste to curved surface. Always replace as a set (with small differential bevel gears)
17	Threaded fitting	2		
18	Case	1		

Printed in Germany – IX, 1990

Notes on dismantling and assembling

Note

The small differential bevel gears run on two needle roller bearing sleeves that comprise 31 separate needle rollers each.

Dismantling

1. Press out pin with centering mandrel **9289**.

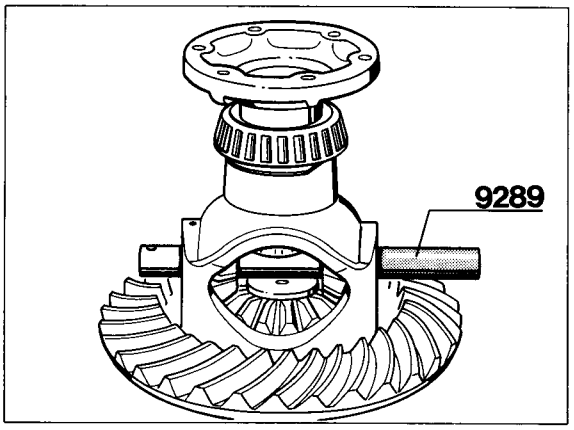

539-39

2. Turn small differential bevel gears until centering mandrel faces the case cutouts and carefully take out the differential bevel gears. Be careful not to drop any needle rollers.

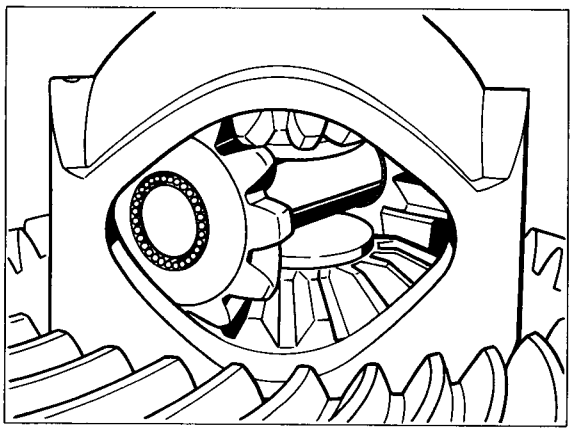

540-39

Reassembling

1. Install large differential bevel gears with pressed in threaded disks through the large differential case cutout and assemble with the halfshaft flanges.

2. Preassemble 31 needle rollers, centering mandrel **9289** and spacer on a small differential bevel gear and install through one of the case cutouts.

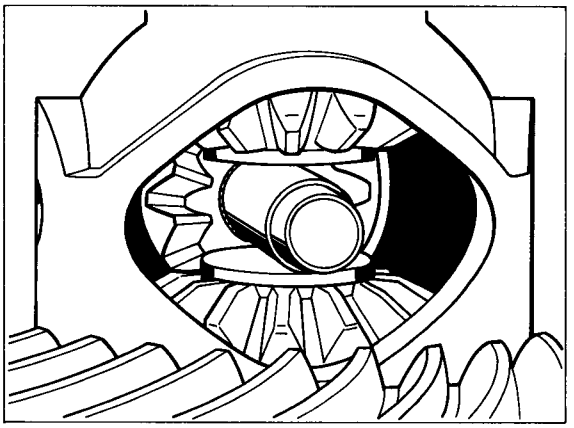

541-39

3. Assemble the other differential bevel gear with 31 needle rollers and carefully locate it on the centering mandrel. Be careful not to drop any needle rollers.

Note

To facilitate assembly, insert needle rollers coated with stiff grease.

4. Use centering mandrel to turn small differential bevel gears until the case bores line up.

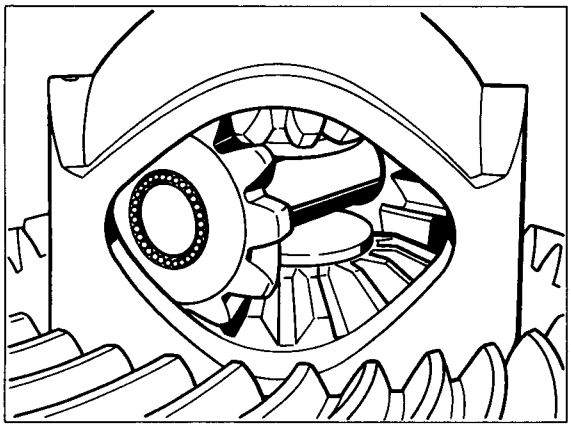

540-38

5. Press in differential pin observing correct position, take off centering mandrel and lock pin according to specifications.

Printed in Germany – IX, 1990

Dismantling and assembling drive torque-controlled limited slip differential for Carrera RS

Tools

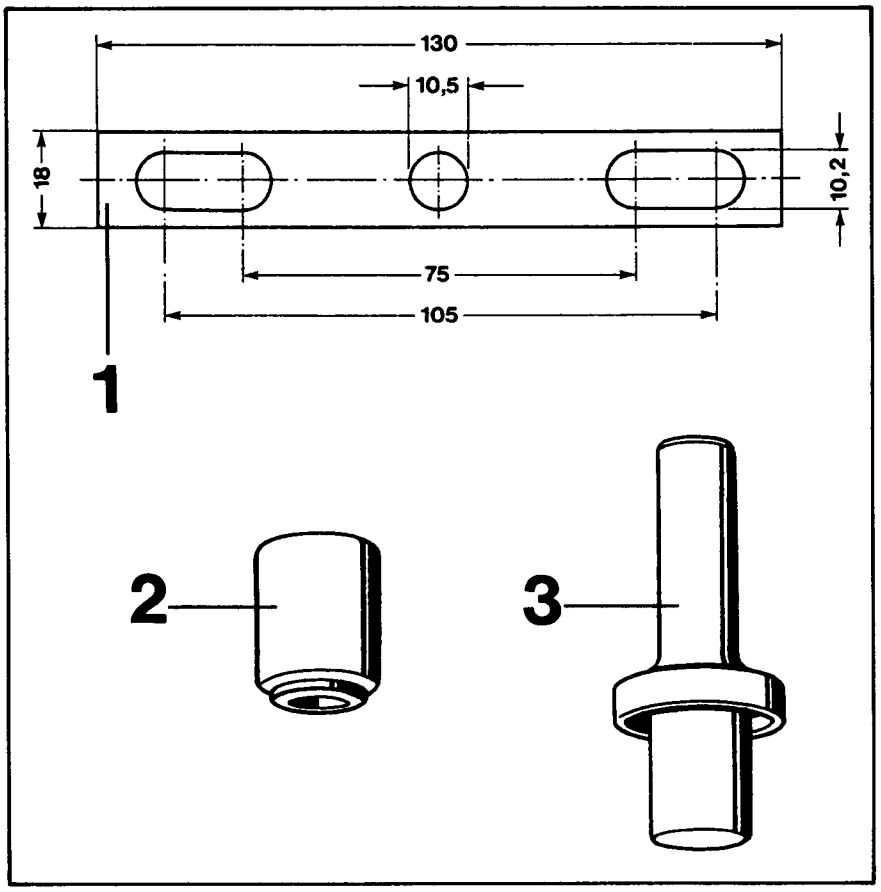

No.	Designation	Special tool	Order number	Explanation
1	Connecting piece			Shop-made tool The connecting piece for the halfshaft flange may be made of 6 x 18 flat steel.
2	Pressure piece	P 263	000.721.263.00	
3	Pressure piece	P 264 b	000.721.264.20	

Printed in Germany – XVIII, 1992

Dismantling and assembling drive torque-controlled limited slip differential for Carrera RS

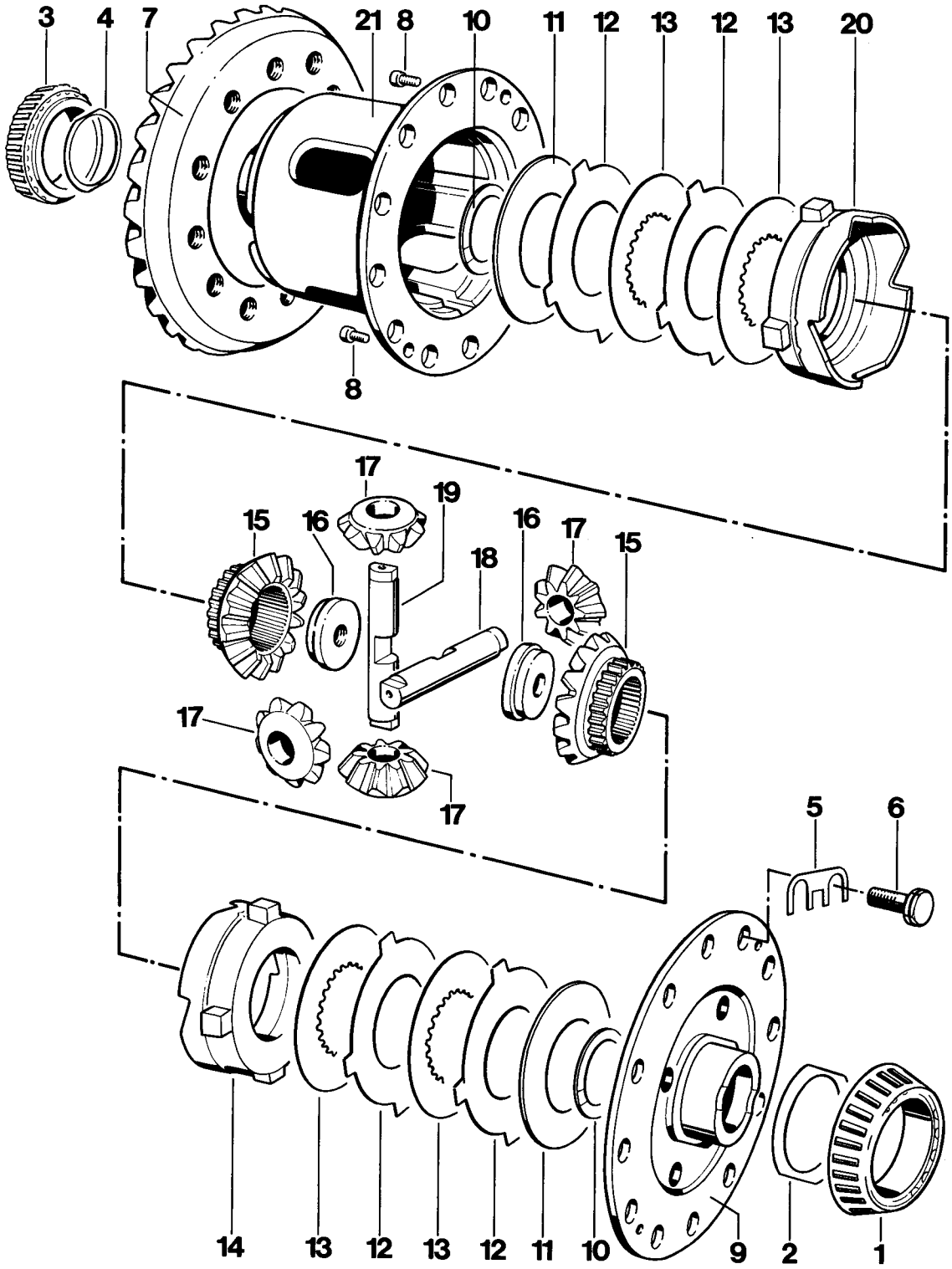

Printed in Germany – XVIII, 1992

No.	Designation	Qty.	Note: Removal	Installation
1	Large inner race of tapered roller bearing	1	Pull off with suitable puller and P 263	Press on with P 264 b
2	Adjusting shim	X	Mark for refitting	Redetermine thickness if necessary
3	Small inner race of tapered roller bearing	1	Pull off with suitable puller and P 263	Press on with P 264 b
4	Adjusting shim	X	Mark for refitting	Redetermine thickness if necessary
5	Tab washer (omitted for Verbus-Ripp bolts)	6		Replace. Slide into the groove of the hex screws, pull together at front with pliers (to ensure that the tab washer is firmly locked with the hexagon head screw) and secure at bottom by bending over one of the hex flats
6	Hexagon head screws (with tab washer)	12		Threads must be dry and free of grease. Tighten with 150 Nm (111 ftlb)
–	Verbus-Ripp bolt (**without** tab washer)			Must always be replaced. Threads must be dry and grease-free. Tighten to 200 Nm (148 ftlb.)
7	Ring gear	1		Threaded holes must be dry and free of grease. Note matching numbers. Readjust if necessary.
8	Screw (M6 x 10)	2		Tight. with 14 Nm (10 ftlb)
9	Cover	1		
10	Thrust washer	2		Fit in place with some grease
11	Cup washer	2		Install in correct position. Apply some stiff grease to the cover side to keep the cover in place
12	Outer disc	4		

Printed in Germany – XVIII, 1992

No.	Designation	Qty.	Note: Removal	Instalation
13	Inner disc (with molybdenium coating)	4		
14	Thrust ring	1	Mark for refitting	Do not confuse with thrust ring no. 20. Install in correct position
15	Shaft bevel gear	2		Replace only as a set (with bevel pinion)
16	Threaded washer	2		
17	Bevel pinion	4		Replace only as a set (with shaft bevel gears)
18	Shaft	1	Mark for refitting	Do not confuse with shaft no. 19, insert in correct position
19	Shaft	1	Mark for refitting	Do not confuse with shaft no. 18, insert in correct position
20	Thrust ring	1	Mark for refitting	Do not confuse with thrust ring no. 14, insert in correct position
21	Housing	1		

Printed in Germany – XVIII, 1992

Notes on dismantling and assembling

Dismantling

Remove pan head screws (no. 8) from case cover, remove cover and take out all internal components.
Mark all thrust rings and differential shafts for reassembly.

Assembling

1. Oil all sliding surfaces of the discs, thrust rings and differential shafts with transmission oil.

2. Install cup washers in such a way that the domed surface points towards the inside (towards the disc package).

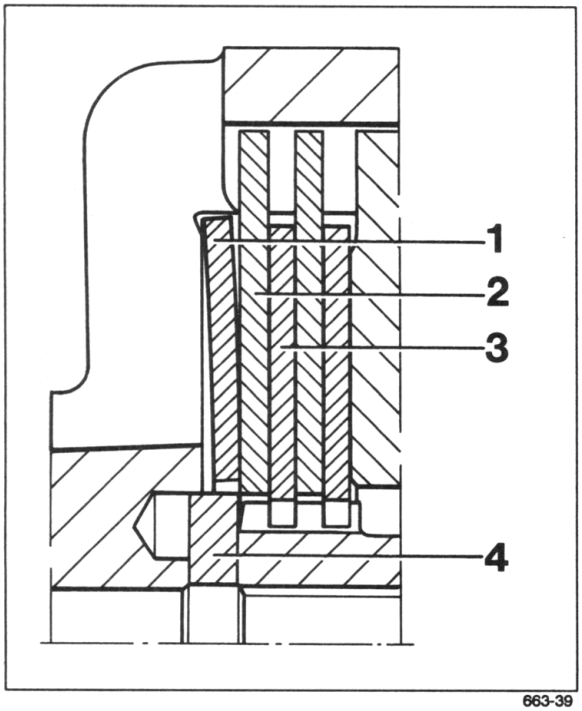

663-39

1 - Cup spring
2 - Outer disc
3 - Inner disc
4 - Thrust washer

3. Install thrust rings and differential shafts in correct position.

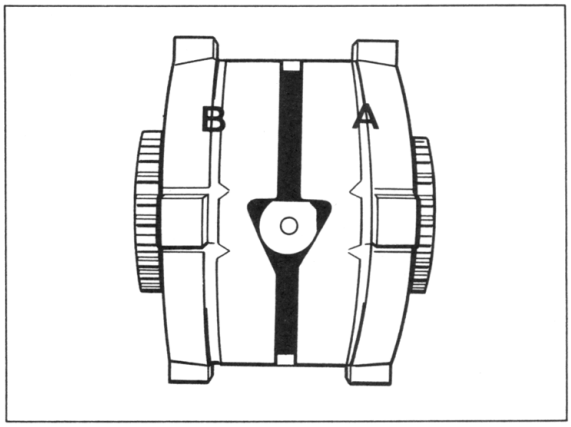

665-39

A = Thrust ring (cover side)
B = Thrust ring (case side)

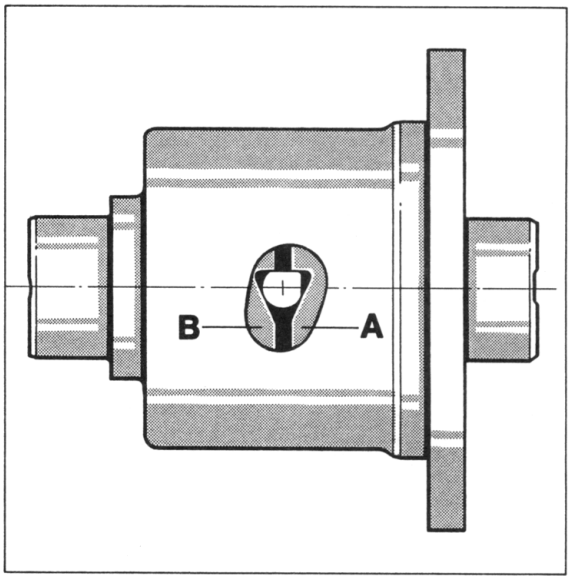

666-39

A = Thrust ring (cover side)
B = Thrust ring (case side)

Printed in Germany – XVIII, 1992

4. Determine thickness of disc package “d” (only required if components are to be replaced).

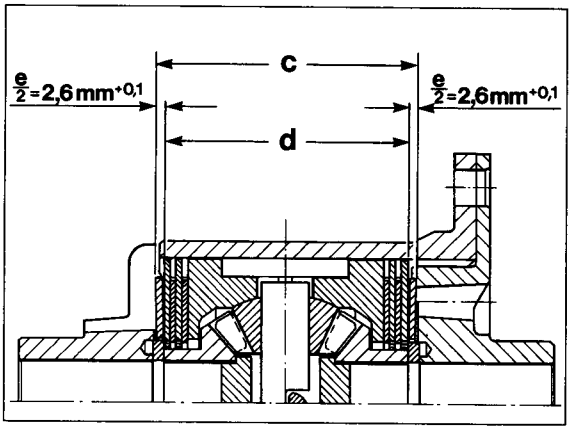

667-39

– Determine case depth, dimension “a” Example: a = 106. 35

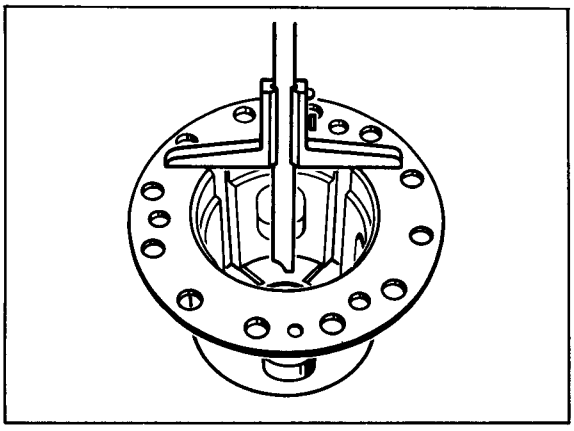

668-39

– Determine dimension “b” of cover. Two measurements are required to determine this dimension.

Measurement I = e. g. 20.95 mm

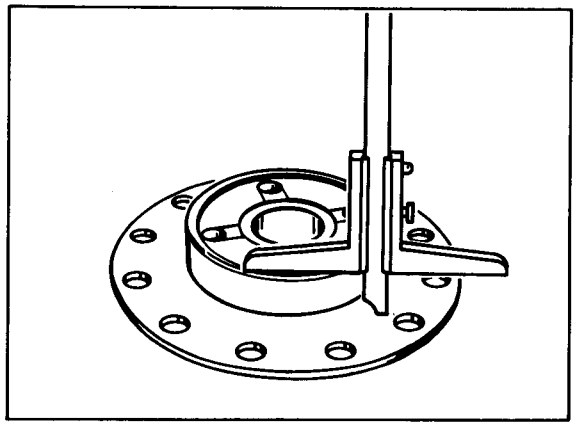

669-39

Measurement II = e.g. 1.30 mm

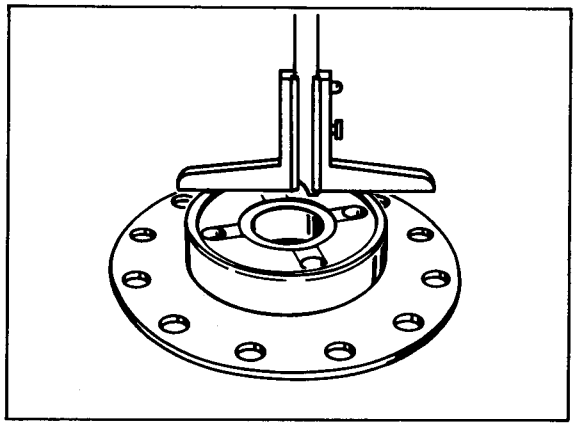

670-39

– **b = Measurement I - Measurement II**

I = 20.95 mm
II = 1.30 mm
b = 19.65 mm

Printed in Germany – XVIII, 1992

– Calculate clearance "c" inside casing.
c = a – b

Example:
a = 106.35 mm
b = 19.65 mm
c = 86.70 mm

– Determine dimension "d"
(disc package with 2.0 mm outer discs and inner discs but without cup springs).
Example: d = 81.50 mm

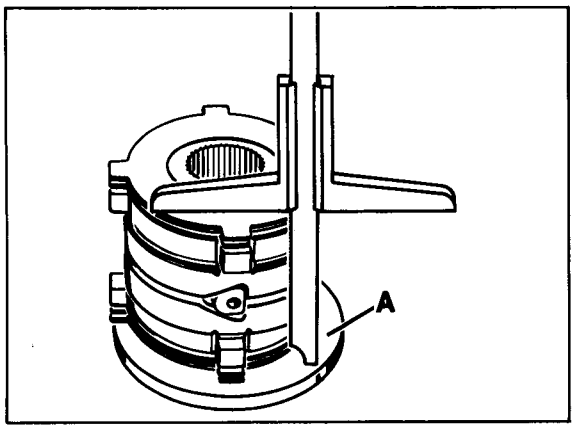

671-39

A = Plate of Special Tool 9508/1

– Determine dimension "e"
(must be 5.20 mm).

e = c – d
Example:
c = 86.70 mm
d = 81.50 mm
e = 5.20 mm

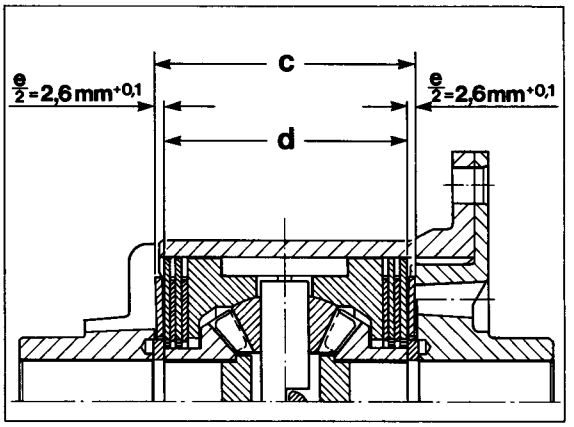

667-39

$\frac{e}{2} + \frac{e}{2}$ = e = 5,2 mm

Note

If dimension "e" is exceeded or if the dimension remains below this value, fit thicker or thinner outer discs.

"e" below 5.20 mm - install thinner discs
"e" above 5.20 mm - install thicker discs

Outer discs are available in a thickness of 1.9 mm, 2.0 mm and 2.1 mm.

Printed in Germany – XVIII, 1992

5. Following assembly, measure spinning torque with one fixed shaft bevel gear and one driven shaft bevel gear. For this purpose, fit one flange with two bolts in a vise and position differential. Insert other flange with shop-made connecting piece and rotate differential with a torque wrench.
A torque of 20...50 Nm (15...37 ftlb) must be attained.

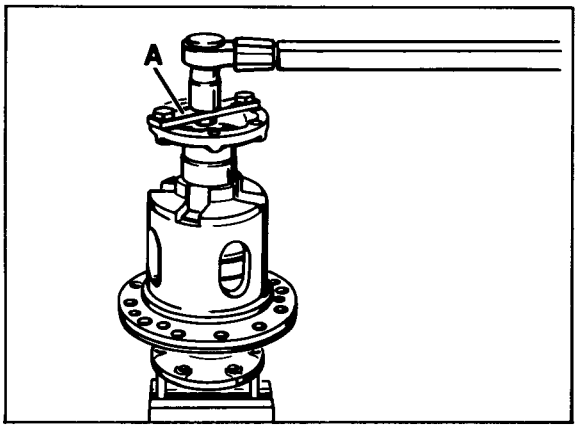

674-39

A = Connecting piece (shop-made)

Note

If the prescribed torque is not attained when the thickest outer discs are fitted, all discs are worn and must be replaced.

Printed in Germany – XVIII, 1992

Dismantling and assembling limited-slip differential (locking value 40%)

Tools

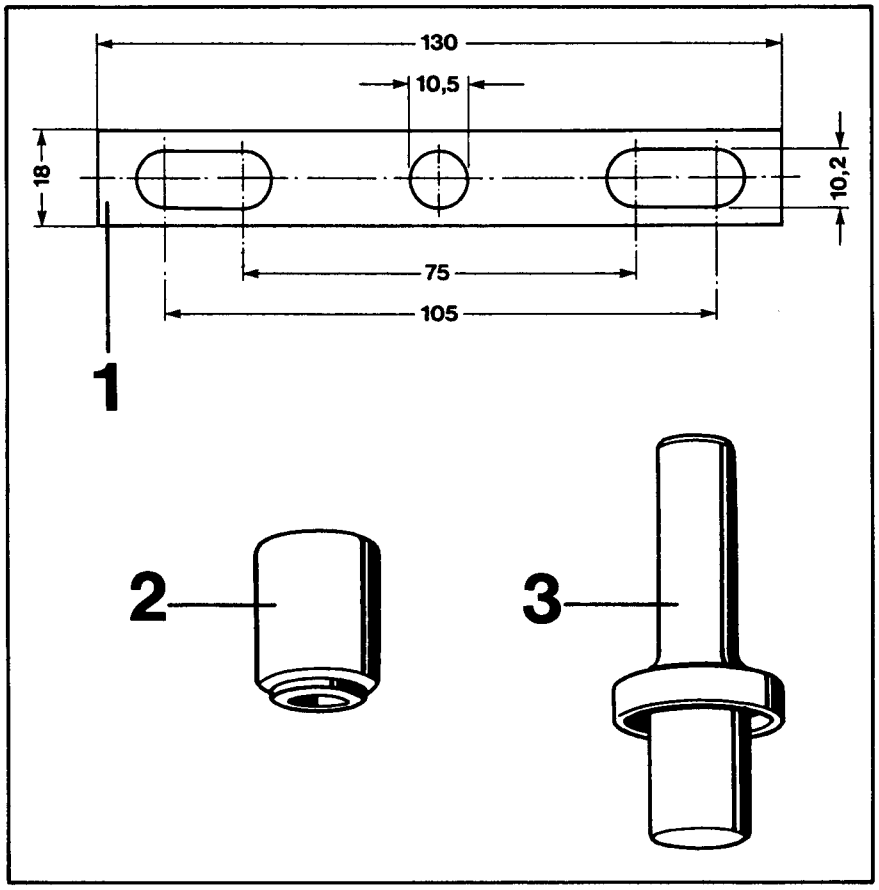

No.	Designation	Special tool	Order number	Explanation
1	Connecting piece			Shop-made tool. The connecting piece for the halfshaft flange may be made of 6 x 18 flat steel.
2	Pressure piece	P 263	000.721.263.00	
3	Pressure piece	P 264 b	000.721.264.20	

Printed in Germany – XX, 1993

Dismantling and assembling limited-slip differential (locking value 40%)

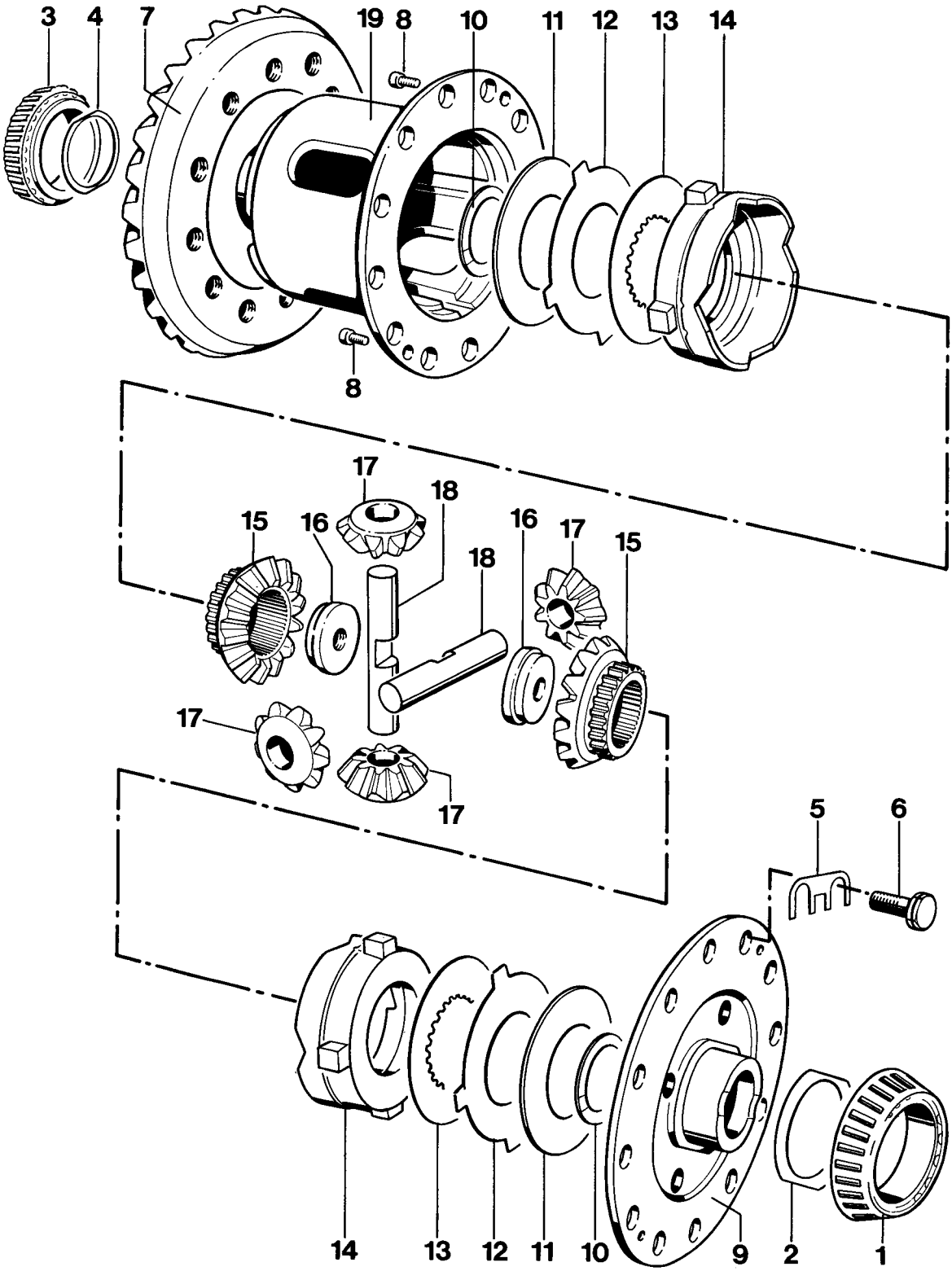

Printed in Germany – XX, 1993

No.	Designation	Qty.	Note: Removal	Installation
1	Large inner race of tapered roller bearing	1	Pull off with suitable puller and P 263	Press on with P 264 b
2	Adjusting shim	X	Mark for refitting	Redetermine thickness if necessary
3	Small inner race of tapered roller bearing	1	Pull off with suitable puller and P 263	Press on with P 264 b
4	Adjusting shim	X	Mark for refitting	Redetermine thickness if necessary
5	Tab washer (omitted for Verbus-Ripp bolts)	6		Replace. Slide into the groove of the hex screws, pull together at front with pliers (to ensure that the tab washer is firmly locked with the hexagon head screw) and secure at bottom by bending over one of the hex flats
6	Hexagon head screws (with tab washer)	12		Threads must be dry and free of grease. Tighten with **150 Nm** (111 ftlb)
–	Verbus-Ripp bolt (**without** tab washer)	12		Must always be replaced. Threads must be dry and grease-free. Tighten to **200 Nm** (148 ftlb.)
7	Ring gear	1		Threaded holes must be dry and free of grease. Note matching numbers. Readjust if necessary.
8	Screw (M6 x 10)	2		Tight. with 14 Nm (10 ftlb)
9	Cover	1		
10	Thrust washer	2		Fit in place with some grease
11	Cup washer	2		Place into correct position
12	Outer disc	2		Redet. thickness if nece.

Printed in Germany – XX, 1993

No.	Designation	Qty.	Note: Removal	Instalation
13	Inner disc (with molybdenium coating)	2		
14	Thrust ring	2		
15	Shaft bevel gear	2		Replace only as a set (with bevel pinion)
16	Threaded washer	2		
17	Bevel pinion	4		Replace only as a set (with shaft bevel gears)
18	Shaft	2		
19	Housing	1		

Printed in Germany – XX, 1993

Notes on dismantling and assembling

Dismantling

Remove pan head screws (no. 8) from case cover, remove cover and take out all internal components.
Mark all thrust rings and differential shafts for reassembly.

Assembling

1. Oil all sliding surfaces of the discs, thrust rings and differential shafts with transmission oil.

2. Install cup washers in such a way that the domed surface points towards the inside (towards the disc package).

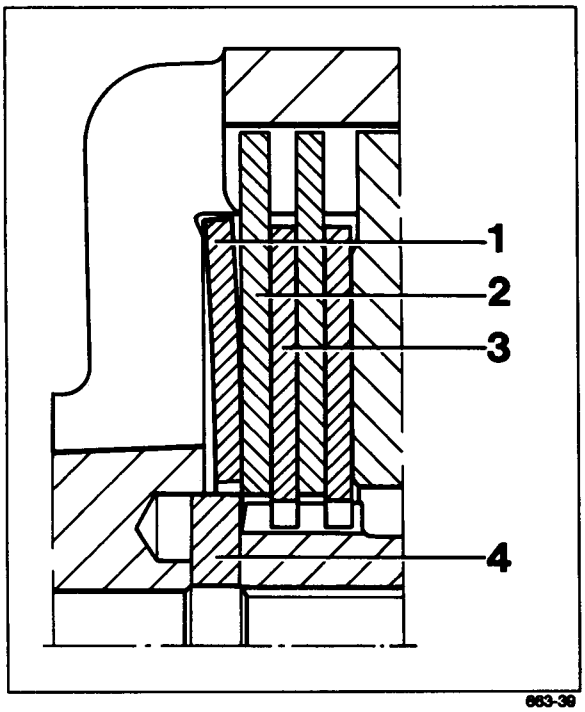

1 - Cup spring
2 - Outer disc
3 - Inner disc
4 - Thrust washer

3. Determine thickness of disc package "d" (only required if components are to be replaced).

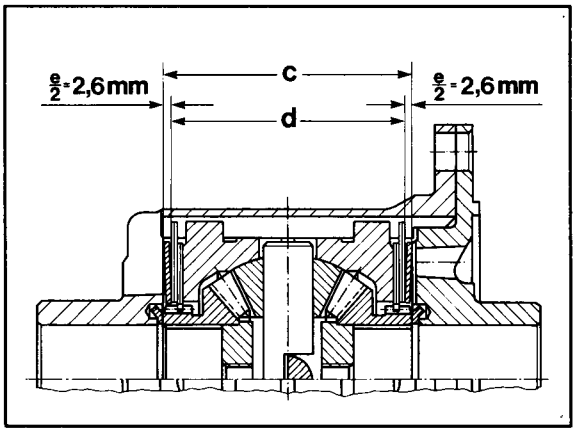

– Determine case depth, dimension "a"
Example: a = 95.50

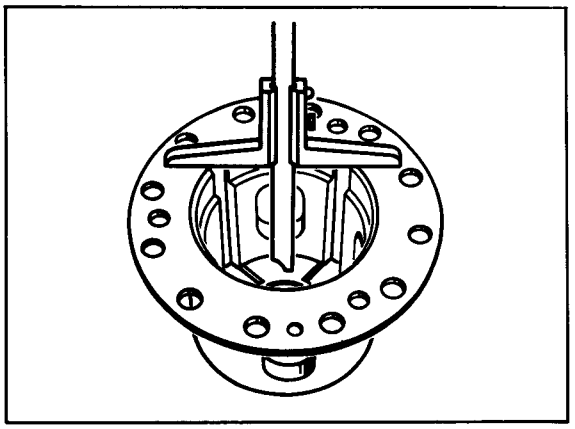

Printed in Germany – XX, 1993

– Determine dimension "b" of cover.
Example: b = 13.8 mm

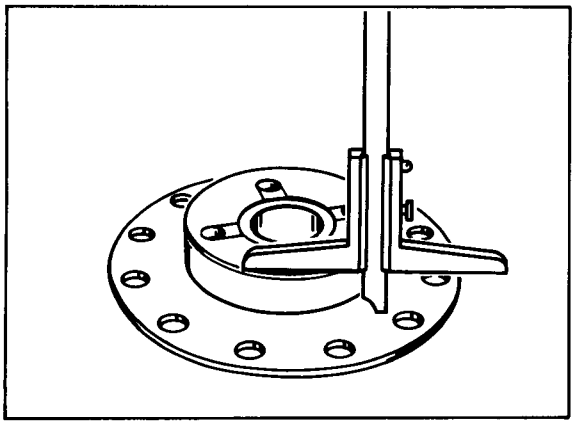

– Calculate clearance "c" inside casing.
c = a – b

Example:
a = 95.5 mm
b = 13.8 mm
c = 81.7 mm

– Determine dimension "d"
(disc package with 2.0 mm outer discs and inner discs but without cup springs).
Example: d = 76.50 mm

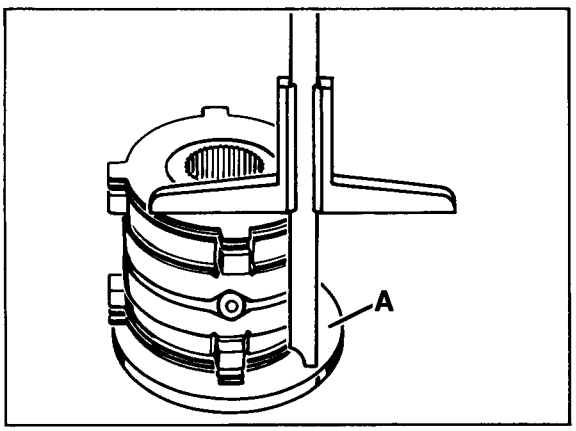

671-39

A = Plate of Special Tool 9508/1

– Determine dimension "e"
(must be 5.20 mm).

e = c – d
Example:
c = 81.70 mm
d = 76.50 mm
e = 5.20 mm

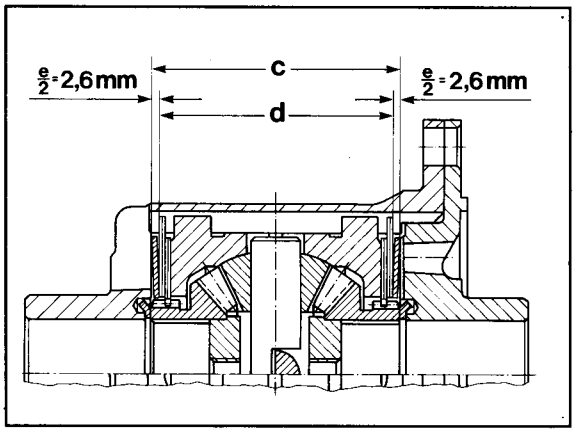

$\frac{e}{2} + \frac{e}{2} = e = 5.2$ mm

Note

If dimension "e" is exceeded or if the dimension remains below this value, fit thicker or thinner outer discs.

"e" below 5.20 mm - install thinner discs
"e" above 5.20 mm - install thicker discs

Outer discs are available in a thickness of 1.9 mm, 2.0 mm and 2.1 mm.

Printed in Germany – XX, 1993

4. Following assembly, measure spinning torque with one fixed shaft bevel gear and one driven shaft bevel gear. For this purpose, fit one flange with two bolts in a vise and position differential. Insert other flange with shop-made connecting piece and rotate differential with a torque wrench.
A torque of 10...35 Nm (7.5...26 ftlb) must be attained.

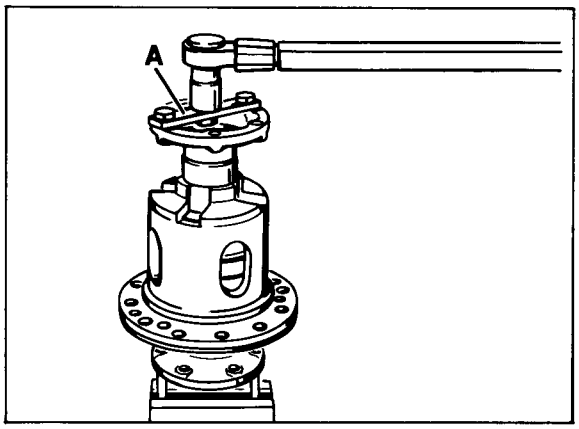

A = Connecting piece (shop-made)

Note

If the prescribed torque is not attained when the thickest outer discs are fitted, all discs are worn and must be replaced.

Printed in Germany – XX, 1993

Adjusting drive set

Tools

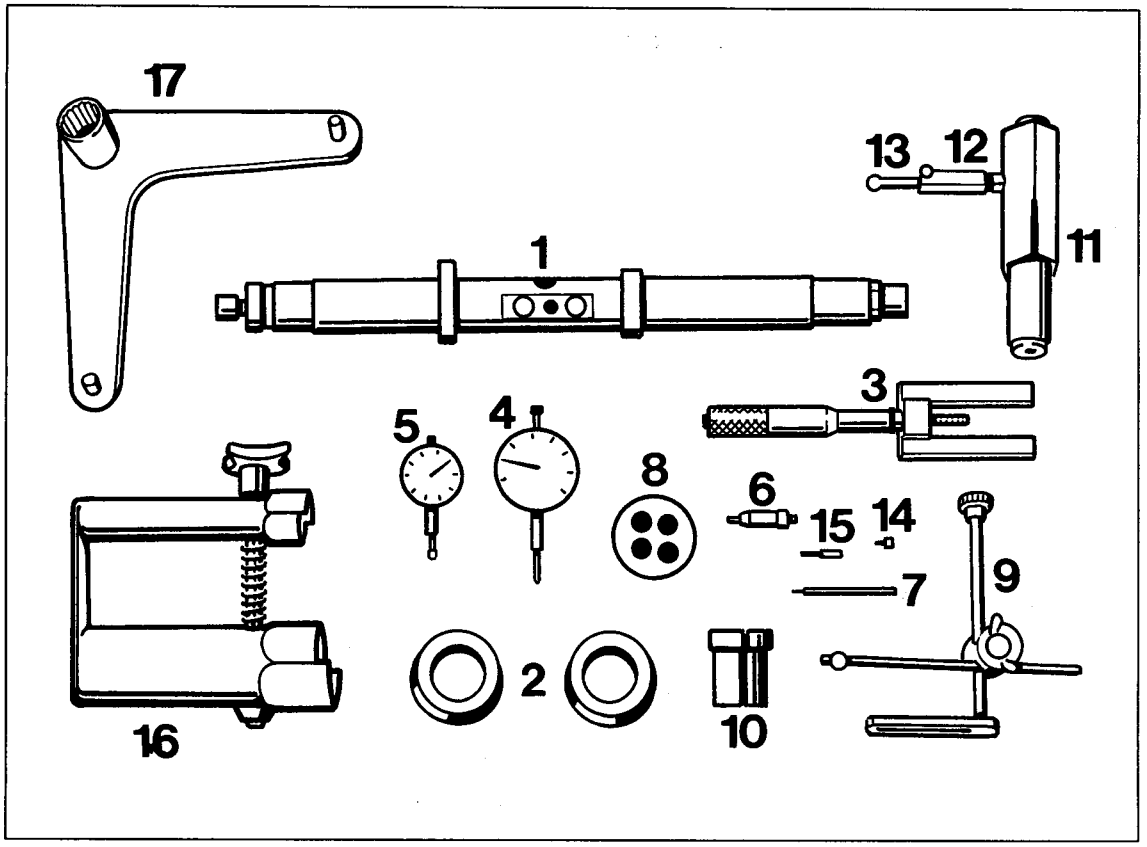

542-39

Printed in Germany – IX, 1990

Adjusting drive set

Tools

No.	Designation	Special tool	Order number	Explanation
1	Measuring mandrel	VW 385/1		
2	Centering disks	9109	000.721.910.90	
3	Master gauge	VW 385/30		
4	Dial gauge	-		Standard
5	Dial gauge	-		Standard, measuring range 3 mm
6	Gauge plunger	VW 385/14		
7	Dial gauge extension	VW 385/56		30 mm long
8	Gauge block plate	9281	000.721.928.10	
9	Dial gauge bracket	VW 387		
10	Clamping sleeve	9145	000.721.914.50	
11	Adjusting device	VW 521/4		
12	Measuring lever	VW 388		
13	Gauge plunger	VW 388	000.721.919.60	
14	Dial gauge extension	VW 382/10		6.0 mm long
15	Dial gauge extension	VW 385/15		9.3 mm long
16	Clamping device	9260	000.721.926.00	
17	Holder	9253	000.721.925.30	

Printed in Germany – IX, 1990

Practical procedure when readjusting the drive set

If it is necessary to adjust drive pinion and ring gear, follow the below sequence to ensure an efficient working procedure:

1. Determine the total thickness of shims "Stot" (S_1 plus S_2) for the specified preload on the taper roller bearings/differential.

2. Determine the thickness of shim "S_3".

3. Split the total shim thickness "Stot" into S_1 and S_2 so that the specified circumferential backlash is present between ring gear and drive pinion.

The aim of this adjustment is to restore the smoothest running position which has been achieved on test equipment in the production line.

To achieve correct results, greatest possible cleanliness for all assembly work and measuring procedures is essential.

When assembling the final drive assembly, it is only necessary to readjust drive pinion and ring gear or drive set if components have been replaced which have a direct influence on the adjustment. Refer to the following table to avoid unnecessary adjustment procedures.

Adjust:: / Replaced component	Ring gear (S_1 + S_2)	Drive pinion (S_3)
Transmission case	x	x
Side transmission cover	x	
Large cylindrical roller bearing and four-point bearing for drive pinion	x	x
Drive set	x	x
Differential housing	x	
Taper roller bearing for differential	x	

Printed in Germany – IX, 1990

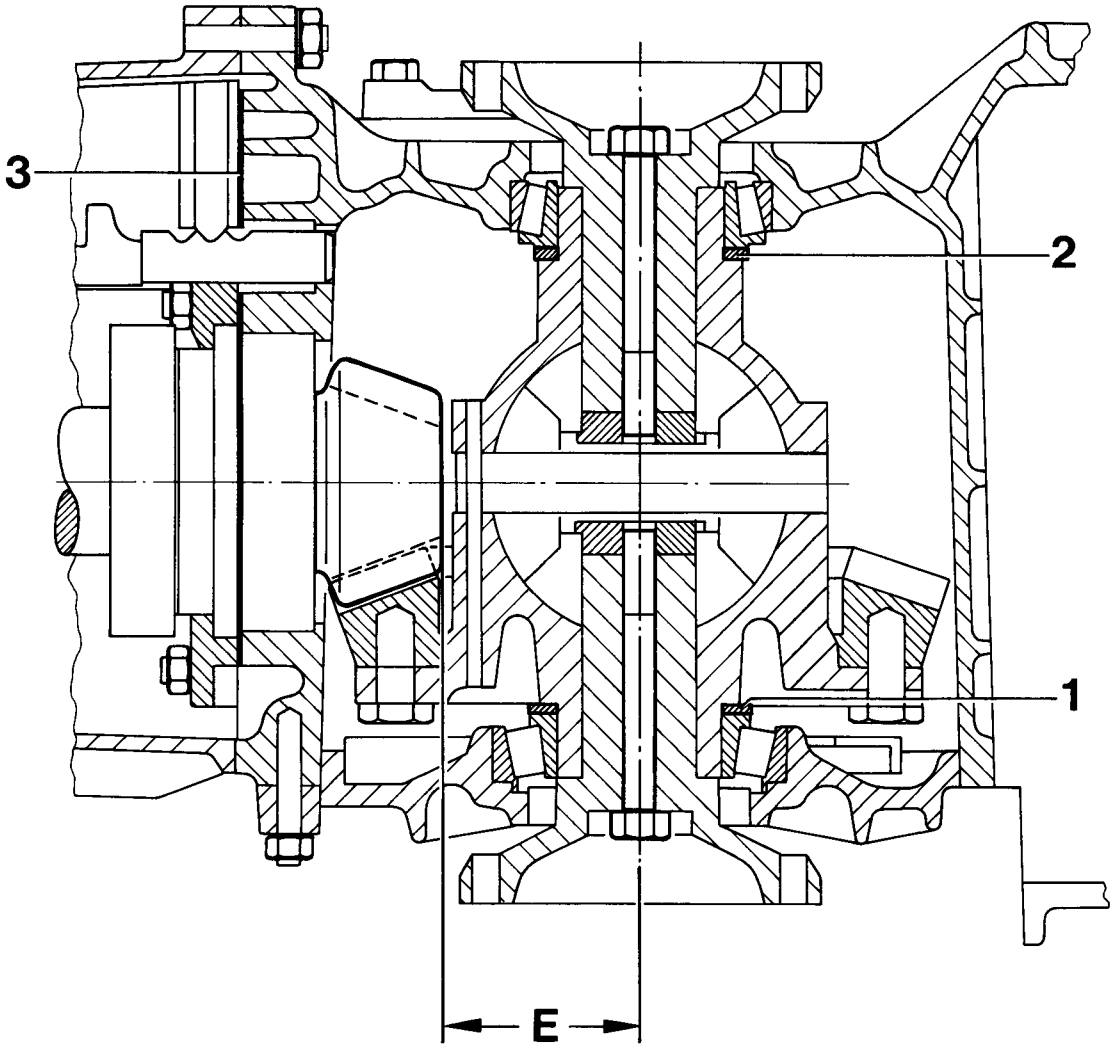

1 – Shim S_1
2 – Shim S_2
3 – Adjusting shim S_3
E – Adjustment dimension

Correct results may only be achieved if assembly work and measuring procedures are carried out carefully and with maximum cleanliness.

Printed in Germany – IX, 1990

Adjusting drive set

General

The setting of drive pinion and ring gear is a determining factor for the service life and smooth running of the rear-axle drive. Drive pinions and ring gears that have been checked for good tooth contact pattern and low noise in both directions of rotation on special test equipment are therefore matched during production. The position at which smoothest running can be achieved is determined by shifting the drive pinion axially, whereby the ring gear is kept within the tolerance of the prescribed tooth backlash. Deviation "r" from the specified design dimension "Ro" is measured, added to the design dimension "Ro" and embossed on the ring gear as setting value "E".

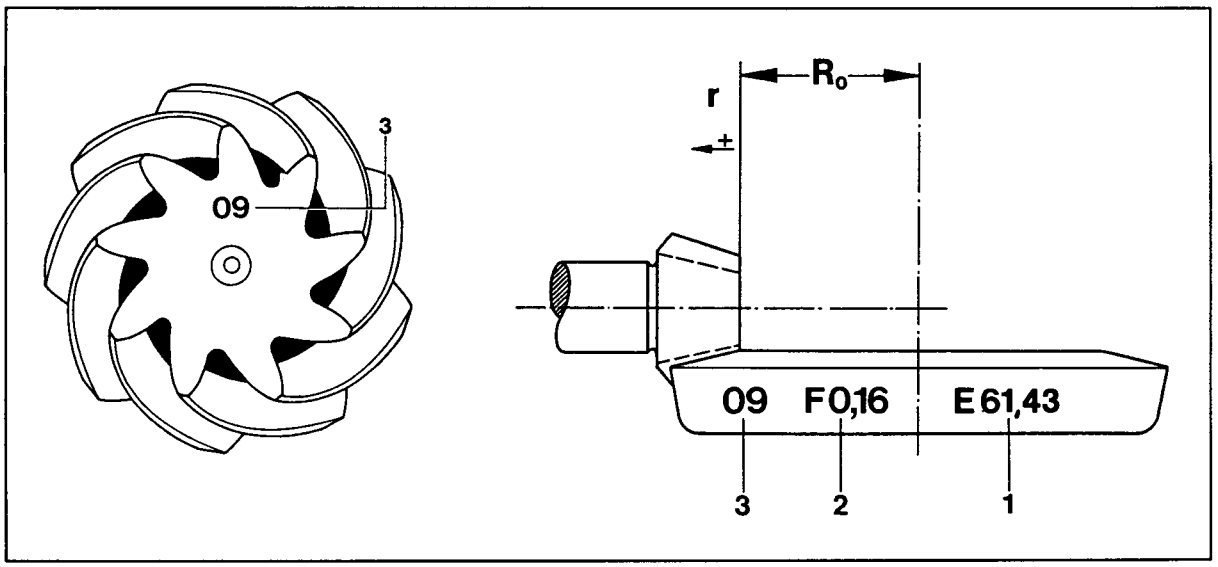

215-39

R_o = Design dimension (61.00 mm)
r = Deviation r
1 = Setting value (Ro + r), e.g. E 61.43
2 = Backlash, e.g. F 0.16
3 = Matching number

Printed in Germany – IX, 1990

Adjust drive pinion

Note

The setting value "E" is indicated on the ring gear.

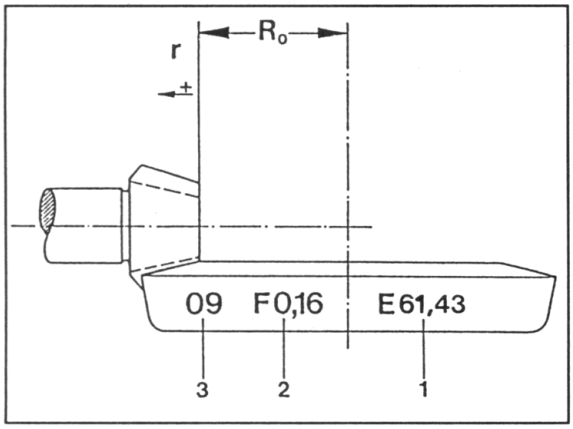

217-39

1 = Setting value "E"

1. Install complete gear set without "S_3" shims and tighten all tensioning plate hex nuts to **23 Nm** (16.9 ft.lb).

2. Fit gear housing and locate with three nuts.

3. Install and engage fifth gear.

4. Block input shaft with special tool 9253 and tighten drive pinion collar nut to 250 Nm (183.25 ft.lb).

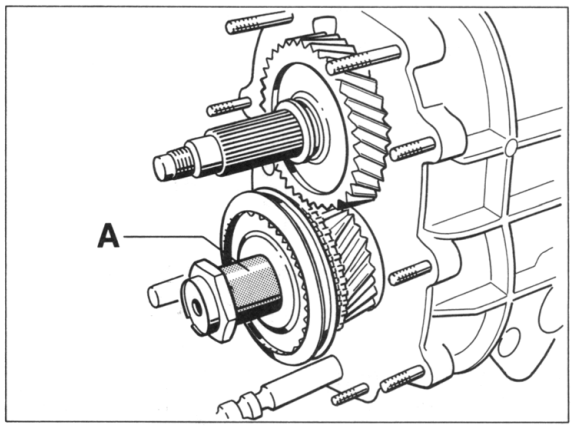

547-39

A = Suitable pipe section or old bushing removed from 5th gear needle roller bearing

5. Set adjustig ring of measuring mandrel **VW 385/1** to dimension "a".

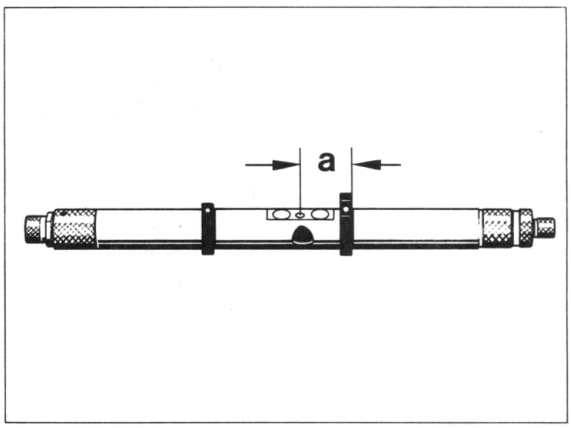

223-39

a = Approx. 65 mm

6. Assemble measuring mandrel with centering disks **9109**, tapered roller bearings, plunger **VW 385 /14** and dial gauge extension **VW 385/15**.

7. Set measuring mandrel with master gauge **385/30** to adjusting dimension (61.43 mm in the example). Set dial gauge (3 mm measuring range) to zero with 1 mm preload.

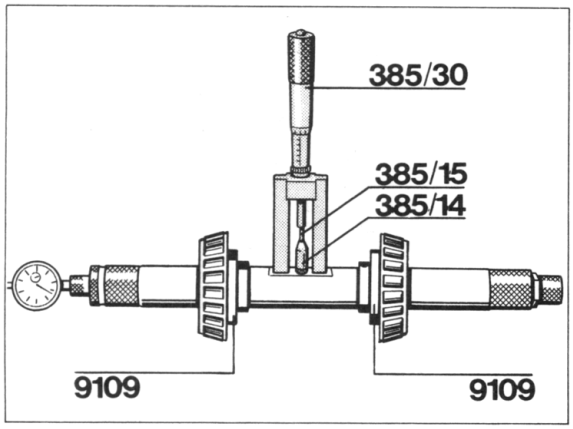

543-39

8. Put gauge block plate **9281** on drive pinion head and insert measuring mandrill into transmission case. Dial gauge extension is located in the area of the gauge block plate.

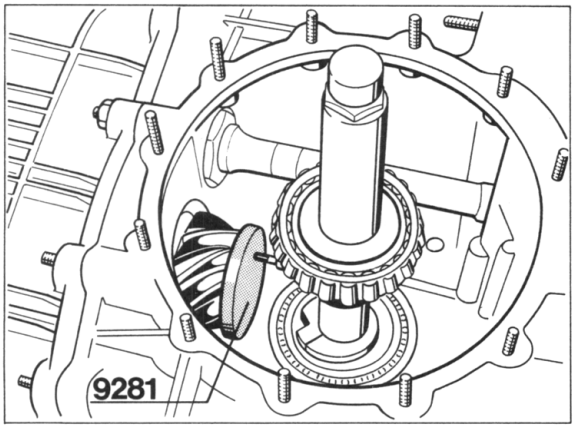

544-39

9. Fit side transmission cover without O-ring and tighten crosswise with 4 nuts.

Note

Do not use a hammer when fitting the side transmission cover (the gauge block plate held by magnets might fall off). Fit cover in installation position only by tightening the nuts uniformly.

10. Pull second centering disk with spindle towards the outside until the measuring mandrel can just be turned by hand.

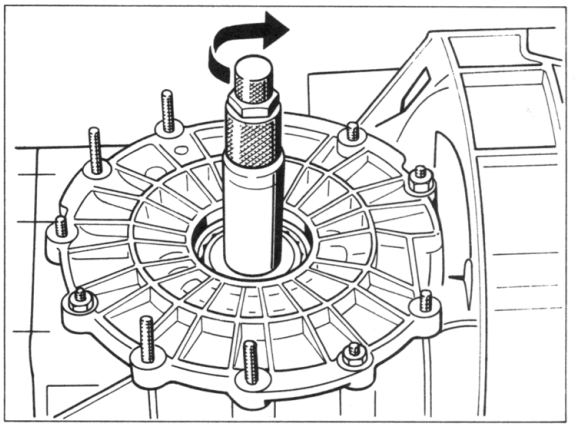

545-39

11. Turn measuring mandrel carefully until the dial gauge extension is vertical to the face of the drive pinion head. At this point, the pointer of the dial gauge reaches maximum deflection (reverse point) and the dial gauge must be read.

Note

The measured value always deviates from the set dimension clockwise (the smaller pointer on the dial gauge is between 1 and 2), i.e. if the dial gauge is set with a preload of 1 mm, the value deviating from 1 is taken as shim thickness "S_3".

Example:

If the small pointer on the dial gauge is between 1 and 2 and the large pointer indicates 0.37 mm, then 0.37 mm is the shim thickness (with 1 mm gage preload) to be inserted. Always round up or down to the nearest 0.05 mm (e.g. 0.37 mm to 0.35 mm).

12. After inserting the necessary shims, check the setting value "E" again. A deviation of ± 0.03 mm is permissible.

Printed in Germany – IX, 1990

Adjusting ring gear

Determine total shim thickness "S tot." (S_1 + S_2).

The ring gear must be adjusted if the

transmission case,
side transmission cover,
tapered roller bearing for differential,
differential housing or drive
set have been replaced.

Note

The drive pinion must be removed to determine the preload of the differential tapered roller bearings.

1. Make sure that the bearing outer races of the tapered roller bearings are well seated in the transmission case or side transmission cover, respectively.

2. Fit one spacer ring (2.5 mm thick) on the ring gear side and opposite side of the differential to be used.

3. Insert differential into transmission case and rotate several times.

4. Fit side transmission cover without seal and tighten all hex nuts to 23 Nm (16.9 ft.lb).

5. Put gauge block plate **VW 385/17** on the collar of the differential.

6. Fasten universal dial gage holder **VW 387** with dial gauge and extension to the case and set to 0 with 2 mm preload.

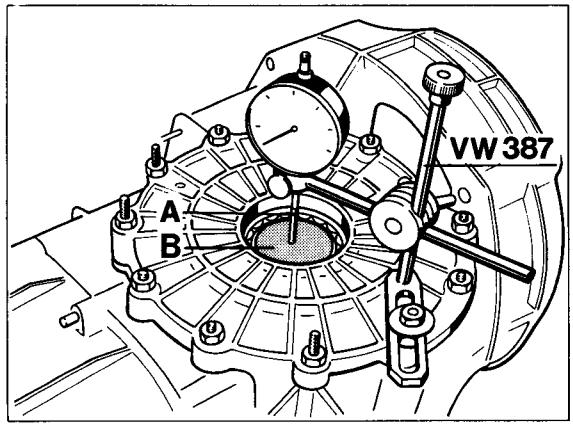

546-39

A = Dial gauge extension (approx. 30...40 mm long)
B = Gauge block plate VW 385/17

7. Move differential up and down. Read off backlash on the dial gauge and note.

Note

Do not turn differential while measuring backlash as this will give an incorrect reading.

8. Calculate "S tot.".
   "S"tot." = Fitted shim thickness
   + measure value
   + pressure fit of the tapered roller bearing

Example

Thickness of shims inserted	5.00 mm
Measured value	0.75 mm
Pressing (constant value)	0.40 mm
"S tot."	6.15 mm

9. Remove differential, pull off both tapered roller bearings and split calculated shim thickness "S tot." as follows.
Select spacer S_1 0.70 mm thinner and S_2 0.70 mm thicker as a starting point for subsequent adjustment of the backlash.

Example

Total shim thickness of spacers
$S_1 + S_2 = 6.15$ mm

Thickness of spacer S_1

$$\frac{6.15 \text{ mm}}{2} = 3.075 \text{ mm}$$
$$- 0.700 \text{ mm}$$
$$2.375 \text{ mm}$$

Thickness of spacer S_2

$$\frac{6.15 \text{ mm}}{2} = 3.075 \text{ mm}$$
$$+ 0.700 \text{ mm}$$
$$3.775 \text{ mm}$$

Note

Spacers are available in thicknesses of 1.6 to 3.1 mm in increments of 0.10 mm.

By using a 0.25 mm shim the shim thicknesses may graduated in increments of 0.05 mm.

The calculated shim thicknesses must be rounded up or down for plausible dimensions that will not alter the total thickness S_1 and S_2.

Example:

Calculated thicknesses

$S_1 + S_2 = 2.375 + 3.775 = 6.15$ mm

Rounded down ring thickness

$S_1 + S_2 = 2.35 + 3.80 = 6.15$ mm

Measure shims with a micrometer in several places. Permissible deviation 0.02 mm. Also check shims for burrs and damage.

Printed in Germany – IX, 1990

Adjusting circumferential backlash

Note

The backlash to be set is embossed on the ring gear.

1. Mount gear set using shims "S_3" determined while adjusting the drive pinion.

Note

Make sure that the collar nut of the drive pinion is tightened to **250 Nm** (183.25 ft.lb) before measuring backlash.

2. Insert differential with tapered roller bearing and shims (S_1 + S_2) into the housing.

3. Fit side transmission cover and tighten all hex nuts to **23 Nm** (16.9 ft.lb).

Note

Always make sure that there is a certain amount of backlash when tightening the nuts. Never allow the drive pinion to seize.

4. Assemble measuring lever **VW 388** and adjusting device VW 521/4 and adjust lever length to 80 mm with the plunger. Refer to dimension "a" in the picture.

5. Insert adjusting device with clamping sleeve (Special Tool 9145) into the differential and clamp firmly.

6. Rotate differential in both directions several times to settle the tapered roller bearings.

7. Fit universal dial gauge holder with flat extension in such a way as to produce a right angle between dial gauge axis and lever.

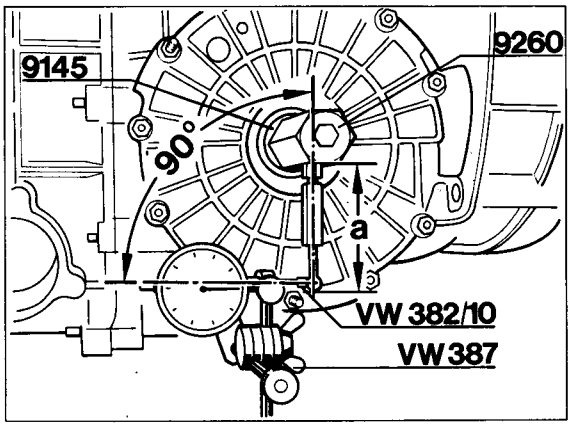

548-39

Dimension "a" = Approx. 80 mm

8. Turn ring gear carefully at the clamping screw of the adjusting device as far as the stop and set the dial gauge to zero. Turn back ring gear and read off circumferential backlash. Note the reading.

Note

When carrying out measurements, the drive pinion must be blocked with Special Tool 9260.

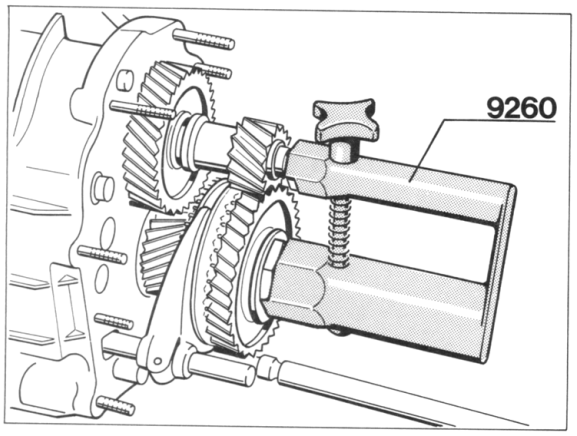

549-39

9. After turning the ring gear a further 90°, repeat measuring procedures three times. The measured values must not deviate from one another by more than 0.05 mm.

Note

The backlash to be adjusted is embossed on the ring gear. The actual value may be less than the specified value by 0.05 mm. Under no circumstances may the backlash be greater than the specified value.

10. If the required backlash cannot be obtained, replace spacers (S_1 + S_2) again. The total shim thickness (S tot.) must not be altered, however.

Workshop Manual

911

Carrera 4

Dr. Ing. h.c. F. Porsche Aktiengesellschaft

The workshop manual is only for the internal use of the Porsche Dealer Organization.

© 1988 Dr. Ing. h.c. F. Porsche
Aktiengesellschaft
Technical Service Department
D-7140 Ludwigsburg

All rights reserved – Printed in Germany

WKD 482520

List of Repair Groups Carrera 4

General	Technical Data	Page 0.1
Repair Groups		Group
Volume I	Maintenance, Self-diagnosis	03
	Engine, Crankcase, Suspension	10
Engine, Maintenance	Engine, Crankshaft, Pistons	13
	Engine, Cylinder Head and Valve Drive	15
	Engine, Lubrication	17
	Engine, Cooling	19
	Fuel Supply	20
	Fuel System, Electronic Injection	24
	Exhaust System/Emission Controls	26
	Starter, Power Supply, Cruise Control	27
	Ignition System	28
	Diagnosis	
Volume II	Clutch, Controls	30
	Clutch	32
Transmission (manual)	Manual Transmission, Controls, Case	34
	Manual Transmission, Gears, Shafts	35
	Differential, Transaxle System, All-Wheel Drive	39
	Diagnosis	
	Clutch, Controls	30
Volume III	Torque Converter	32
	Automatic Transmission, Controls, Case	37
Transmission (automatic)	Automatic Transmission, Gears, Shafts	38
	Differential, Transaxle System	39
	Diagnosis	
Volume IV	Front Wheel Suspension	40
	Rear Wheel Suspension, Axle Shaft	42
Chassis	Wheels, Tires, Alignment	44
	Antiblock System	45
	Brakes, Mechanical	46
	Brakes, Hydraulics, Regulator, Booster	47
	Steering	48
	Diagnosis	
Volume VI	Body-Front Section	50
	Body-Center Section	51
Body	Body-Rear Section	53
	Lids	55
	Doors	57
	Electric Sunroof	60
	Hardtop	61
	Bumpers	63
	Glasses, Window Control	64
	Exterior Equipment	66
	Interior Equipment	68
	Seats	72
	Seat Covers	74
Volume VI	Heater	80
	Ventilation	85
Heating, Ventilation, Air Condition	Air Conditioner	87
	Diagnosis	
Electrics	Instruments, Fuel Gauge, Alarm System	90
	Radio, Telephone, On-board-computer	91
	Windshield Wipers and Washer	92
	Exterior Lights, Lamps, Switches	94
	Interior Lights	96
	Diagnosis	
Volume VII	Wiring	97
Electrics Wiring Diagrams		

Printed in Germany, 1988

Page

Clutch, autom., torque converter

Technical data . . . . . 32 - 0101
Removing and installing the torque converter . . . . . 32 - 101

Automatic transmission, controls, case

Removing and installing the position switch on transmission . . . . . 37 - 101
Adjusting cable for selector device . . . . . 37 - 102a
Removing and installing cable for selector mechanism . . . . . 37 - 102c
Removing and installing selector mechanism . . . . . 37 - 102g
Dismantling and assembling selector mechanism . . . . . 37 - 102i
Dismantling and assembling gear selecting system with keylock and shiftlock . . . . . 37 - 102m
Removing and installing lift solenoid for shiftlock . . . . . 37 - 102q
Removing and installing keyolock bowden cable . . . . . 37 - 102s
Checking keylock and shiftlock . . . . . 37 - 102u
Removing and installing rear transmission case . . . . . 37 - 103
Removing and installing the intermediate plate . . . . . 37 - 107
Dismantling and assembling intermediate plate . . . . . 37 - 110a
Disassembling and assembling the parking lock . . . . . 37 - 111
Dismantling and assembling transmission . . . . . 37 - 115
* Dismantling and assembling transmission . . . . . 37 - 123

Automatic transmission, gears, shafts

Checking the ATF fluid level . . . . . 38 - 101
Changing ATF fluid and cleaning the ATF strainer . . . . . 38 - 103
Flushing ATF cooler and lines . . . . . 38 - 104a
Removing and installing ATF cooler . . . . . 38 - 104c
Removing and installing the inductive speed sensor . . . . . 38 - 105
Removing and installing the wiring harness for the transmission . . . . . 38 - 107
Removing and installing the hydraulic control unit . . . . . 38 - 109
Removing and installing solenoid valves . . . . . 38 - 113
Removing and installing the rotary shaft seal for the ATF pump . . . . . 38 - 117
Removing and installing the ATF pump . . . . . 38 - 119

* No provisions are currently made for repair of the automatic section.

Printed in Germany – XXI, 1994

* Dismantling and assembling 4th gear tower . . . . . 38 - 121
* Dismantling and assembling output shaft and freewheel . . . . . 38 - 127
* Dismantling and assembling clutch E . . . . . 38 - 131
* Dismantling and assembling brake F . . . . . 38 - 137
* Dismantling and assembling brake pack CD with spider shaft . . . . . 38 - 143
* Dismantling and assembling spider shaft . . . . . 38 - 147
* Dismantling and assembling brake C, C' and D . . . . . 38 - 151
* Dismantling and assembling clutch B . . . . . 38 - 161
* Dismantling and assembling clutch A . . . . . 38 - 167
* Determining the end clearance . . . . . 38 - 171

Dfferential

Disassembling and assembling the long joint flange . . . . . 39 - 101
Removing and installing the rotary shaft seal for the short joint flange . . . . . 39 - 105
Sealing of the driving shaft . . . . . 39 - 107
Removing and installing differential and drive pinion . . . . . 39 - 109
Dismantling and assembling differential . . . . . 39 - 115
Dismantling and assembling drive pinion . . . . . 39 - 119
Adjusting drive set . . . . . 39 - 123

Diagnosis

Tiptronic Diagnosis / Troubleshooting

Diagnosis Tiptronic . . . . . D37/38 - 101
Troubleshooting mechanical / hydraulic section . . . . . D38 - 101

* No provisions are currently made for repair of the automatic section.

Printed in Germany - XXII, 1995

Technical data

4-speed Tiptronic transmission A50

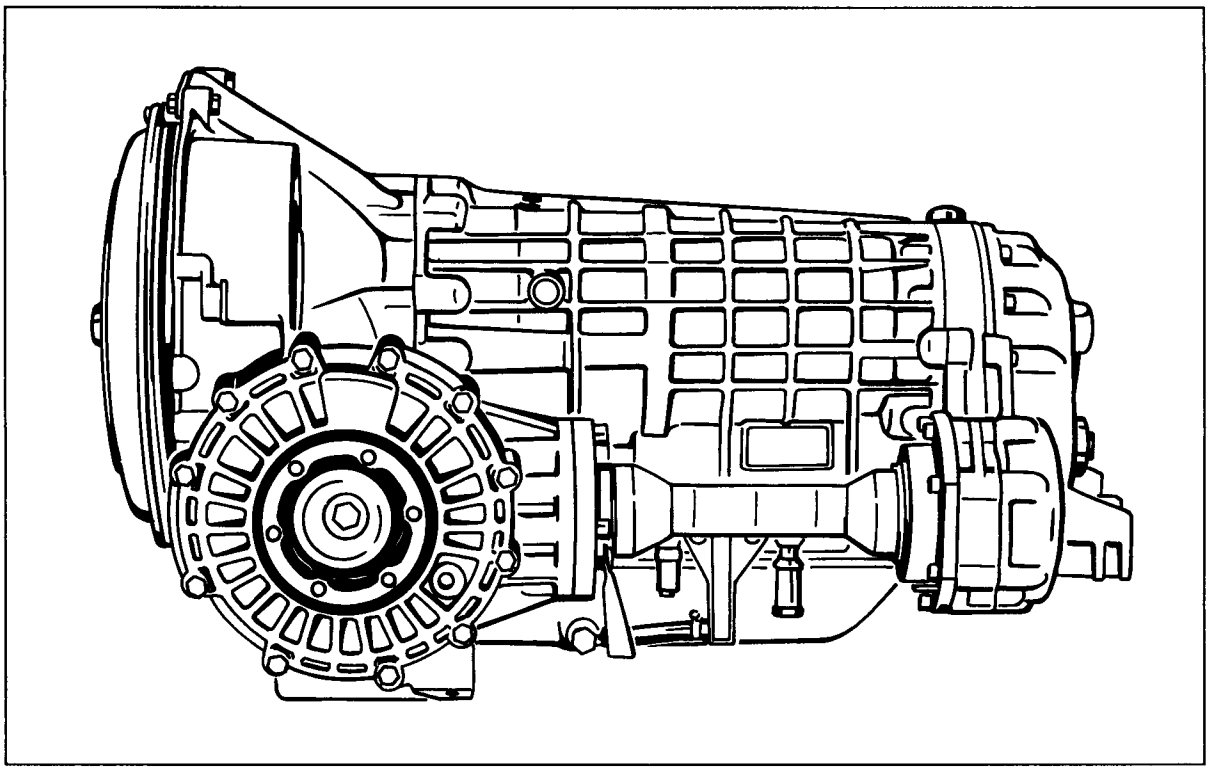

428-37

Type	Identification code	Equipment	Installed in	Model year
A50/01		4-speed	911 Carrera 2 worldwide	90

Printed in Germany – VI, 1990

Technical data

General data	A50/01	
Design	fully-automatic 4-speed planetary transmission (Tiptronic)	
Ratio		
Spur pinion	1.100	
1st gear	2.479	
2nd gear	1.479	
3rd gear	1.000	
4th gear	0.728	
Reverse gear	2.086	
Final drive	Hypoid bevel gear with 15 mm offset	
Final drive ratio	9:33	i = 3.667
Stall speed	2300 ±200	
Capacity, rear axle final drive	approx. 0.9 l multi-grade transmission oil 75 W 90 API classification GL5 (MIL-**L 2105 B**), optionally SAE 90	
Capacity, automatic unit with converter	Total capacity approx. 9.0 l Change quantity approx. 3.0 l ATF-Dexron II D	

Printed in Germany – VI, 1990

Technical data

4-speed Tiptronic transmission A50

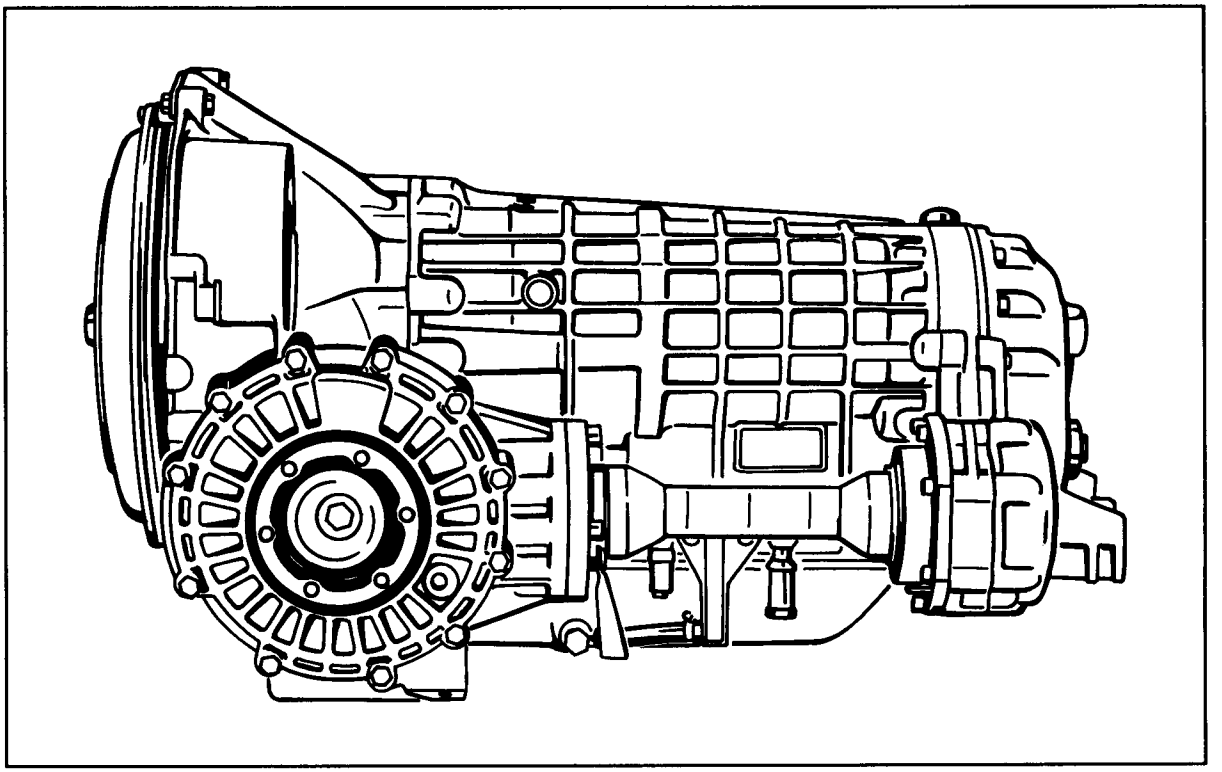

428-37

Type	Identification code	Equipment	Installed in	Model year
A50/01		4-speed	911 Carrera 2 worldwide	90/91
A50/02		4-speed	911 Carrera 2 worldwide (except USA)	92/93/94
A50/03		4-speed	911 Carrera 2 USA	92/93/94

Printed in Germany – XXI, 1994

Technical data

General data	A50/01	A50/02	A50/03
Design	fully-automatic 4-speed planetary transmission (Tiptronic)		
Ratio			
Spur pinion	1.100		
1st gear	2.479		
2nd gear	1.479		
3rd gear	1.000		
4th gear	0.728		
Reverse gear	2.086		
Final drive	Hypoid bevel gear with 15 mm offset		
Final drive ratio	9:33	i = 3.667	9 : 32 i = 3,555
Stall speed	2300 – 400		
Capacity, rear axle final drive	approx. 0.9 l multi-grade transmission oil 75 W 90 API classification GL5 (MIL-**L 2105 B**), optionally SAE 90		
Capacity, automatic unit with converter	Total capacity approx. 9.5 l Change quantity approx. 3.5 l ATF-Dexron II D		

Printed in Germany - XXII, 1994

Removing and installing the torque converter

Removing

1. Remove transmission.

2. Remove converter, with transmission in horizontal position.

Note

Do not damage converter bearing assembly and rotary shaft seal.

Installing

1. Carefully insert converter, with transmission in horizontal position. Turn the converter to and fro until the gear toothing engages and the installation position is reached.

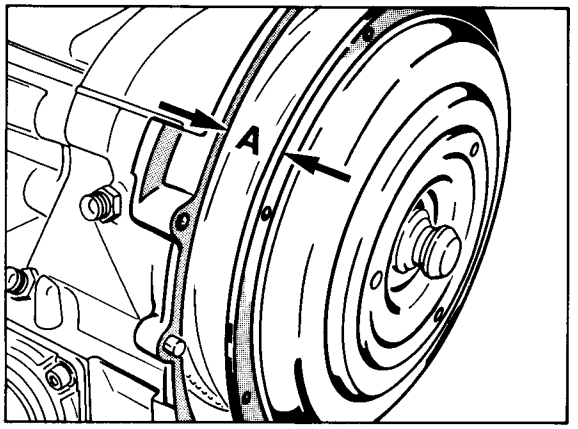

412-32

A = approx. 25 mm

2. Secure converter against falling out with special tool **9325**

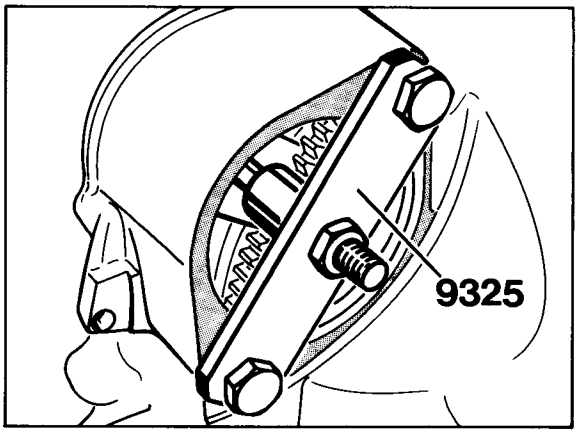

413-32

Printed in Germany – VI, 1990

Removing and installing the position switch on transmission

Removing

1. Move selector lever to position "N".

2. Remove transmission underbody cladding.

3. Disconnect selector lever cord pull at actuating lever.

4. Remove actuating lever.

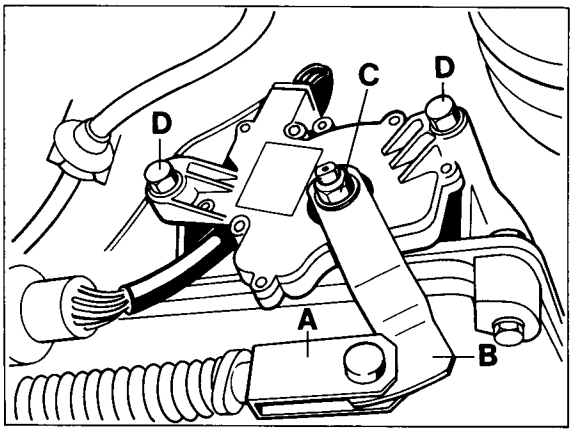

381-37a

A = Selector lever cord pull
B = Actuating lever
C = Hexagon nut (M 8 x 1) with washer
D = Fixing screws

5. Unlock cable holder, remove plug-in connection and disconnect.

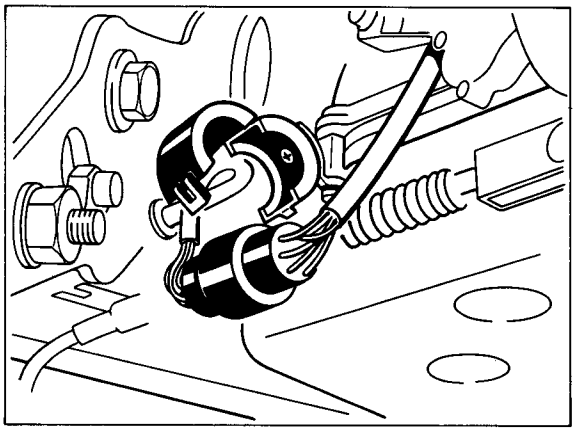

397-37

6. Unscrew fixing screws for position switch and remove switch.

Installing

Installation takes place in reverse order.

Tightening torques:

Position switch to transmission	= 10 Nm
Actuating lever to switching shaft	= 15 Nm

Printed in Germany – VII, 1990

1. Set selector shaft to position "N" (turn shaft anti-clockwise up to the stop and then back two clicks) and place switch in the correct position.

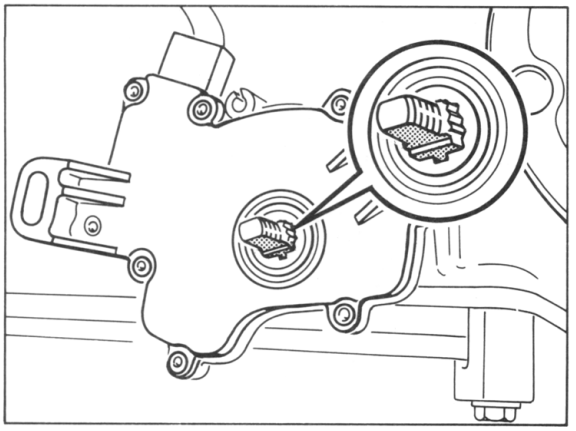

1884-37

2. Adjusting multifunctional switch.

— Push pointer of special tool **9326** onto the selector shaft and turn the switch until the locating pin can be pushed into the fixing hole of the switch. Tighten the mounting screws to **10 Nm** (7 ftlb.) in this position.

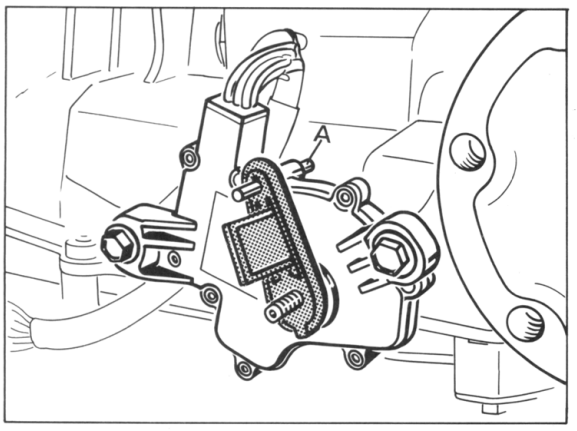

398-37

A = locating pin

2. Check, and if necessary adjust, setting of selector lever cable.

Adjusting cable for selector device

1. Move selector lever to position "1".

2. Move multi-function switch to position "1" by pushing forward operating lever on switch by maximum amount.

3. Push cable forward and adjust position of fork head until bore holes of fork head and operating lever on gearbox lie exactly one over the other. From this position rotate fork head a further two turns onto thread of cable.

4. Check adjustment by shifting through all the gears and confirming that gear is displayed on speedometer. In addition change gate from "D" to "M". This must be possible with one smooth, straightline movement.

Printed in Germany – VII, 1990

Removing and installing cable for selector mechanism

Printed in Germany – VII, 1990

Removing and installing cable for selector mechanism

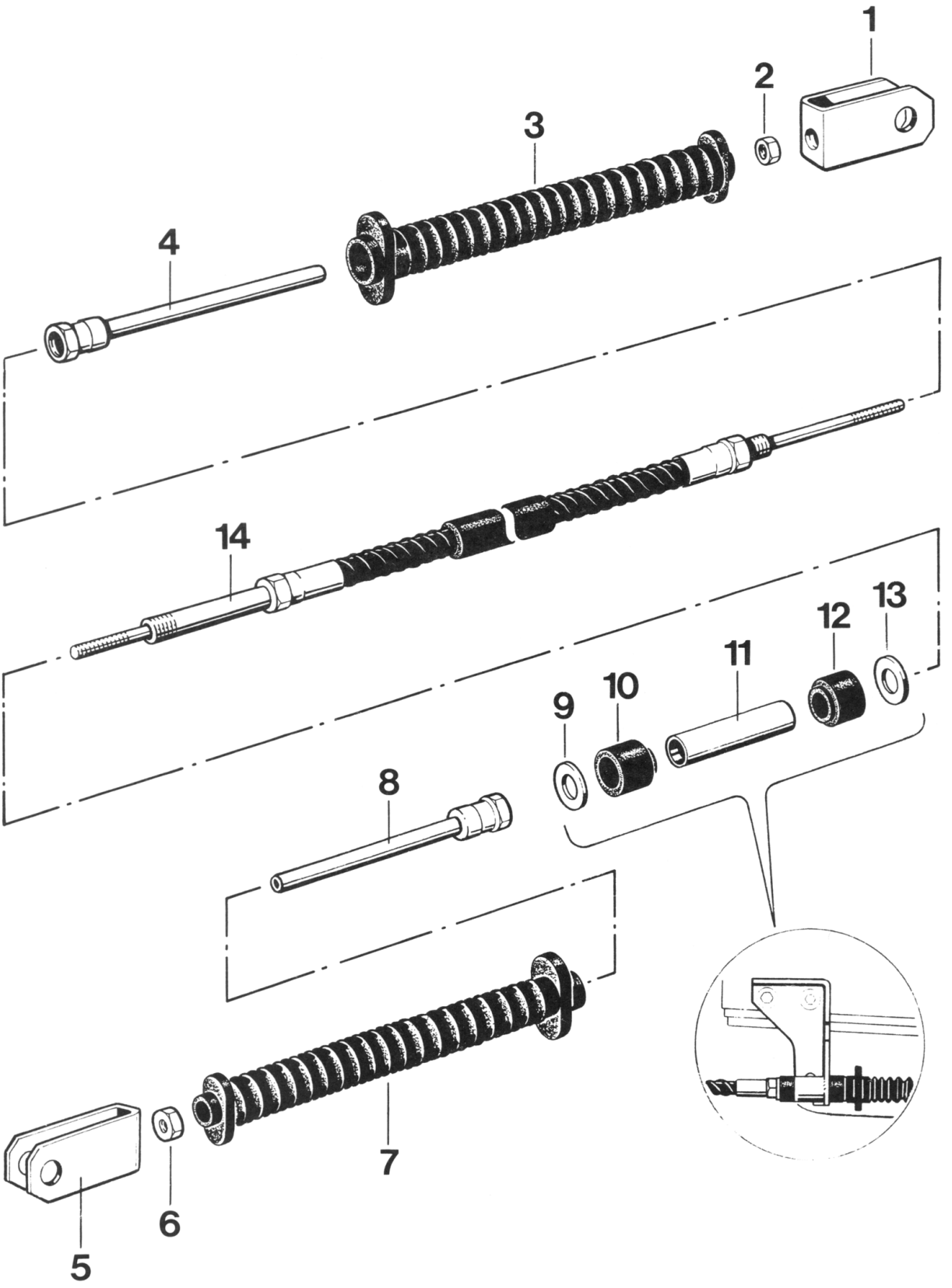

Printed in Germany – VII, 1990

No.	Designation	Qty.	Note: Removal	Installation
1	Fork head	1		Screw on to half length of thread on cable
2	Hexagon nut	1		Tighten to 6 Nm (4.4 ftlb)
3	Gaiter seal	1		
4	Guide tube	1		
5	Fork head	1		
6	Hexagon nut	1		Tighten to 6 Nm (4.4 ftlb)
7	Gaiter seal	1		
8	Guide tube	1		
9	Washer	1		
10	Rubber mount	1		Install in correct position
11	Spacer tube	1		
12	Rubber mount	1		Install in correct position
13	Washer	1		
14	Cable			Readjust

Instructions for removal and installation

Removal

1. Remove underfloor paneling for gearbox and center underfloor paneling.

2. Disconnect cable on operating lever and remove fork head.

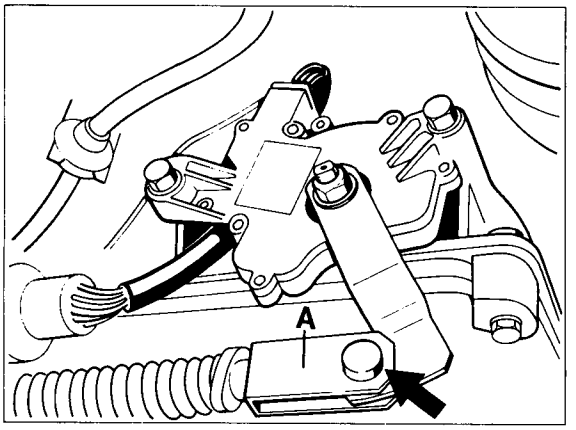

381-37

A = Fork head

3. Disconnect guide tube on bracket

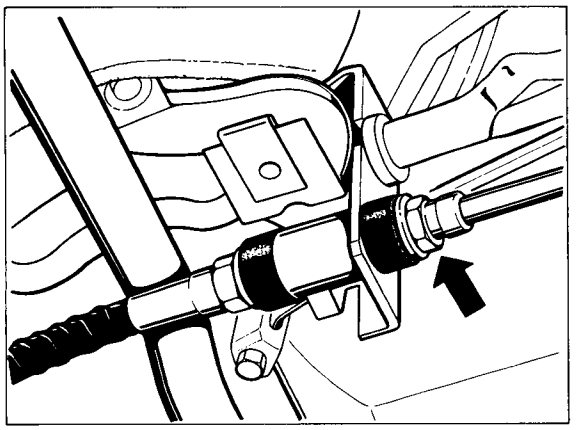

494-37

4. Disconnect cable on selector lever casing and disconnect guide tube.

Installation

1. Installation is carried out in reverse order.

2. Adjust cable for selector mechanism (see P. 37 - 102a).

Removing and installing gear selecting system

Removal

1. Disconnect battery.

2. Remove center underside panel.

3. Disengage selector lever cable from deflection lever and undo guide tube.

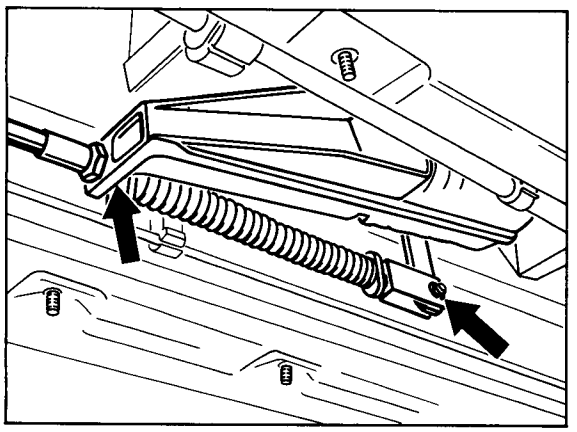

1066-37

4. Unscrew release button and pull off selector knob.

5. Remove center console.

6. Disconnect cable valve body from switch plate (only for keylock models).

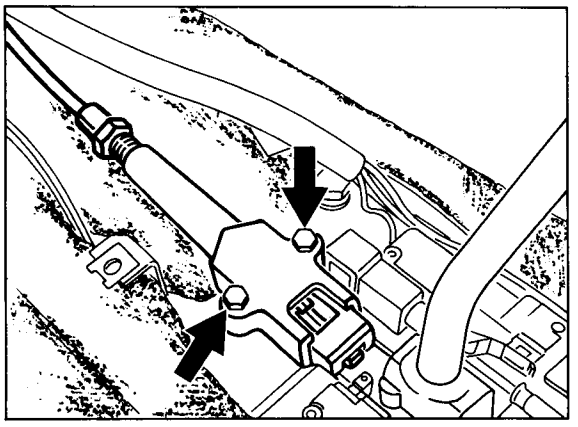

1067-37

7. Disconnect connectors for switch plate.

8. Unscrew four mounting screws (M 6) and take out selector lever operator from above.

Installation

Tightening torques:

Gear selecting system to body = 10 Nm (7 ftlb)

Cable valve body to
switch plate = 2,5 Nm (2 ftlb)

1. Install in reverse order.

2. Press selector knob manually until it is up against the stop, making sure the twist lock engages in the cutout in the selector lever.

3. Check release button for smooth operation. It must return into the home position by itself.

4. Check selector lever cable adjustment and readjust if required.

5. Check operation of keylock and shiftlock (if fitted).

Dismantling and assembling selector mechanism

Printed in Germany – VII, 1990

Dismantling and assembling selector mechanism

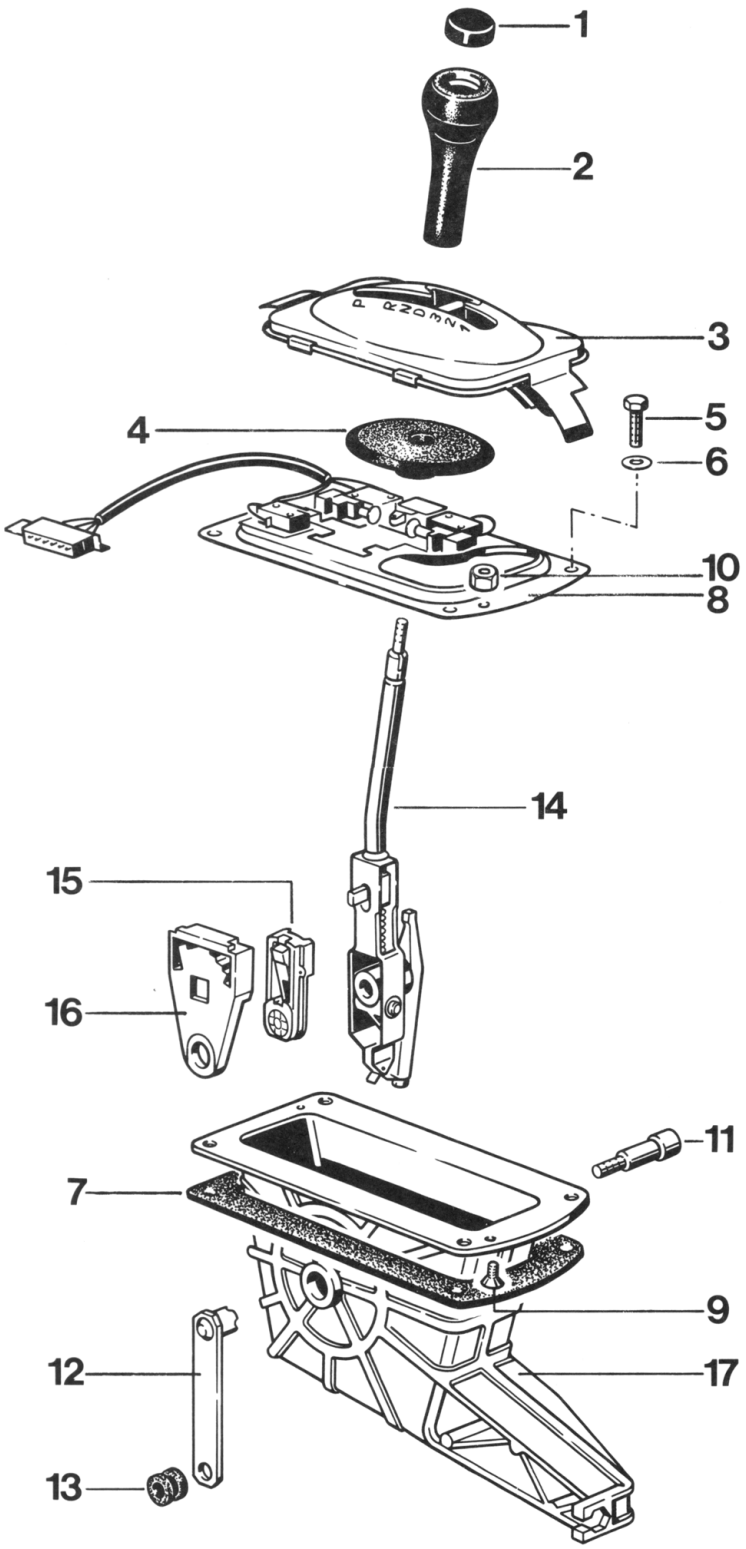

No.	Designation	Qty.	Note: Removal	Installation
1	Unlocking button	1	Unscrew by hand	Must return automatically to original position after operation
2	Selector lever handle	1	Pull off by hand	Press on in correct position until properly in contact. Twisting lock must engage with lock on shift lever.
3	Cover panel	1	Can only be taken out from below and with center console removed	
4	Cover	1		
5	Hexagon screw	4		Tighten to 10 Nm (7.3 ftlb)
6	Washer	4		
7	Seal	1		
8	Hexagon nut	2		Tighten to 2 Nm (1.4 ftlb)
9	Flat-head screw	2		
10	Control plate	1		
11	Clamping screw	1		Tighten to 23 Nm (16.9 ftlb)
12	Reversing shaft	1		
13	Rubber mount	1		
14	Selector lever (complete)	1		
15	Lock	1		
16	Gate	1		Must engage in recess in control plate
17	Selector lever casing	1		

Note

Coat all sliding surfaces in low-temperature grease (e.g. Shell S 6508)

Dismantling and assembling gear selecting system with keylock and shiftlock

Tools

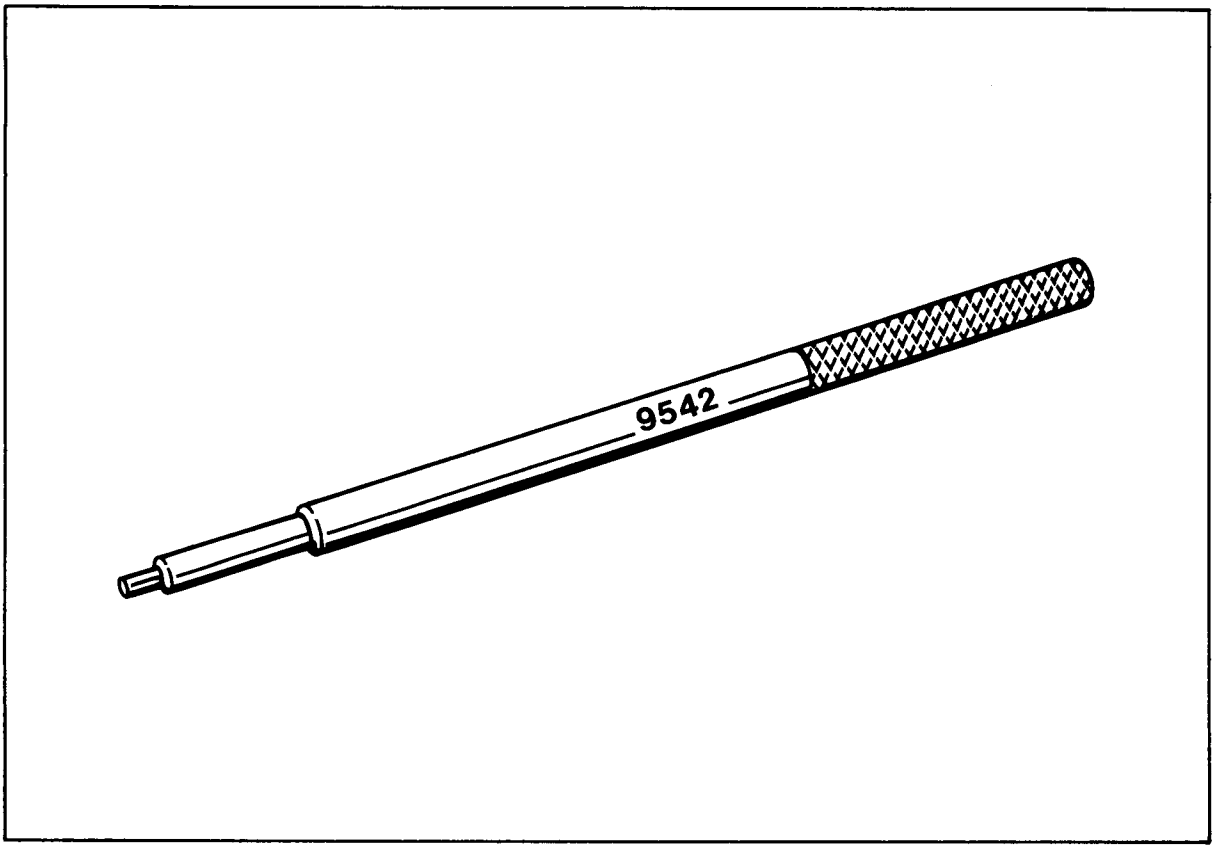

No.	Designation	Special tool	Order number	Explanation
	Assembly mandrel	9542	000.721.954.20	

Printed in Germany – XV, 1992

Dismantling and assembling gear selecting system with keylock and shiftlock

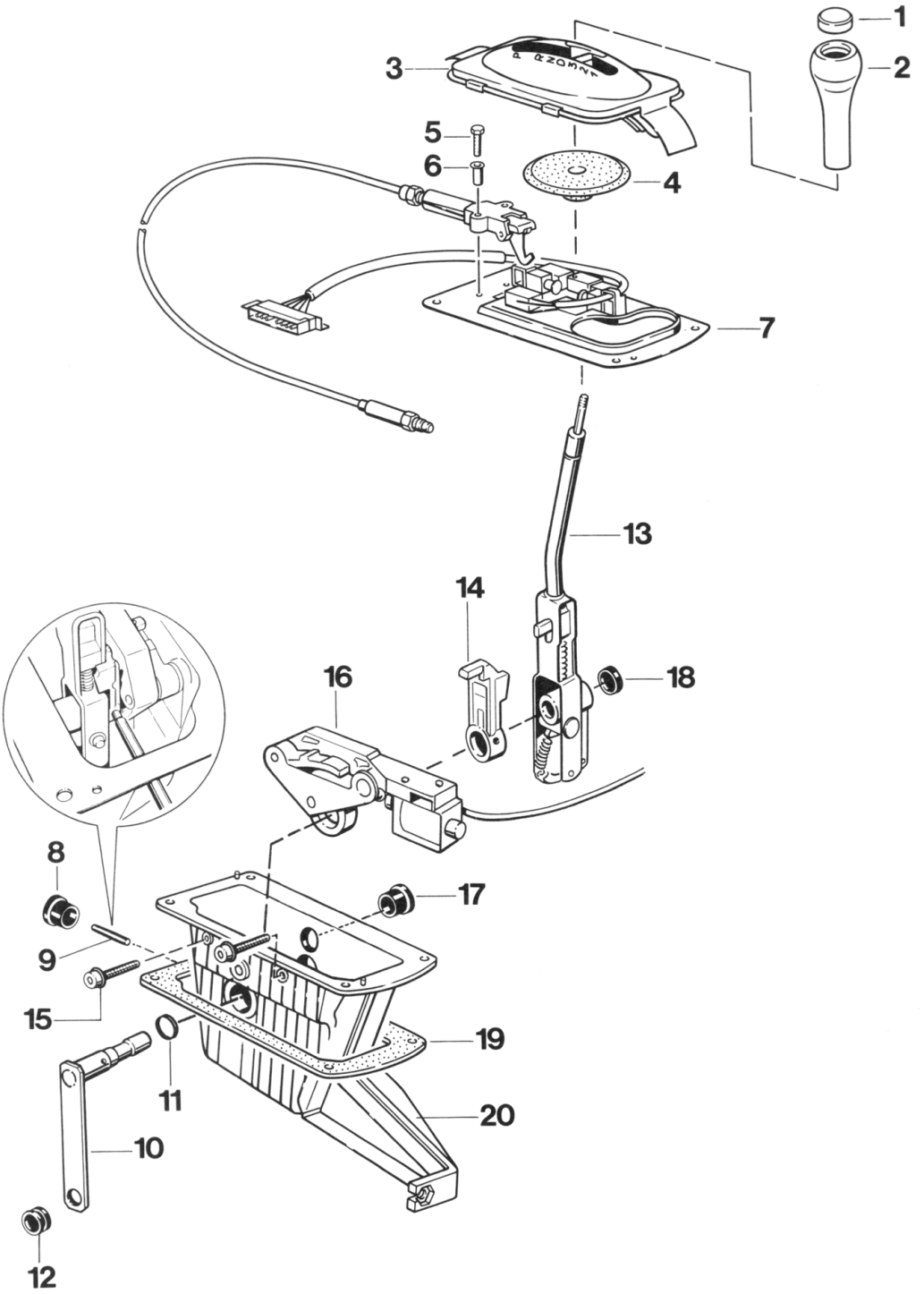

Printed in Germany – XV, 1992

No.	Designation	Qty.	Note: Removal	Installation
1	Release button	1	Screw off manually	Must return to home position automatically after it has been actuated
2	Selector knob	1	Pull off manually	Push up to stop in correct position. Twist lock must engage in cutout in selector lever
3	Shroud	1	Can only be removed from below with the center console removed	
4	Cover	1		
5	Hexagon head screw	2		Tighten to 2.5 Nm (2 ftlb)
6	Sleeve	2		
7	Switch plate	1		
8	Plug	1		
9	Tensioning sleeve	1	Drive out using Special Tool 9542	Bore of driver and relay shaft must match
10	Deflection lever	1		
11	Seal	1		
12	Rubber mount	1		
13	Selector lever	1	Shift into manual speed selection gate	
14	Driver	1		
15	Hex socket head bolt	2		Tighten to 6.5 Nm
16	Shift-Lock	1		
17	Plug	1		
18	Cover	1		
19	Gasket	1		
20	Housing	1		

Note

Coat all sliding surfaces with low-temperature grease (e.g. Shell S 6508)

Removing and installing lift solenoid for shiftlock

Note

When checking the lift solenoid electrically, be sure to observe correct polarity
Terminal 1 = Positive
Terminal 2 = Negative

Removal

1. Remove center console and gear selecting system.

2. Remove switch plate.

3. Using a suitable tool, press connecting rod carefully off the lift solenoid.

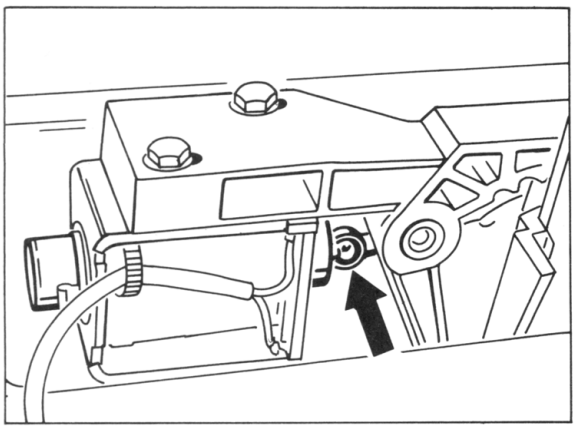

1085-37

4. Screw out mounting screws and take off lift solenoid.

Installation

1. Set selector lever to "1" position.

2. Grease ball and ball socket with low-temperature grease.

3. Clip connecting rod to lift solenoid, retaining the connecting rod in correct position using a suitable wire hook or marking tool and pushing the free lift solenoid carefully into the ball socket.

4. Using sleeves and hexagon head bolts, fit lift solenoid to gate in such a manner that it remains free to slide in an axial direction.

5. Adjusting the lift solenoid:

- Set selector lever to position „P".
- Slide lift solenoid all the way back in the slots of the gate.
- Push iron core from the lift solenoid towards the pawl until it contacts the stop and locate it in this position.
- Slide the actuated lift solenoid axially until the idler contacts the stop of the pawl.
- Tighten hexagon head bolt to 2.5 Nm (2 ftlb) in this position.

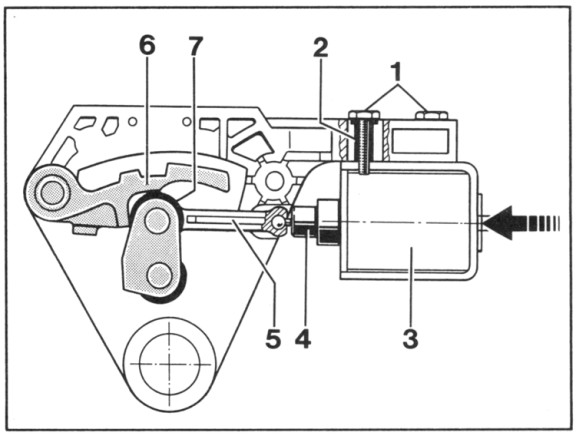

1086-37

1 - Hexagon head bolt
2 - Sleeve
3 - Lift solenoid
4 - Iron core
5 - Connecting rod
6 - Pawl
7 - Idler

6. Check operation of shiftlock.

Printed in Germany – XV, 1992

Removing and installing keylock bowden cable

Removal

1. Disconnect battery.

2. Remove complete center console, knee guard and side nozzle.

3. Undo Central Information System and leave it supended on the wiring.

4. Turn ignition lock to position „2" (Ignition on).

Note

The ignition lock must be in position „2". If it is left in any other position, both the lock and the bowden cable may be damaged.

5. Unbolt bowden cable from ignition lock.

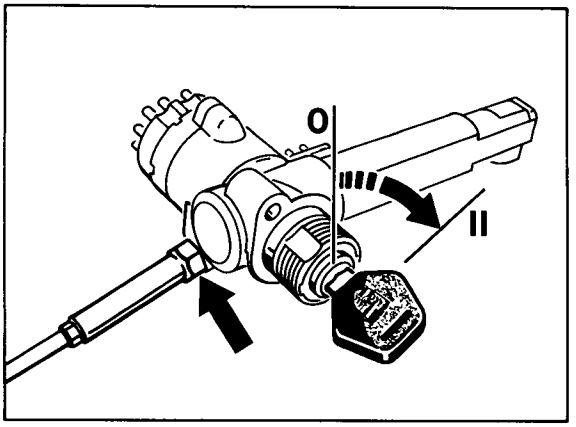

1068-37

6. Undo mounting screws of valve body.

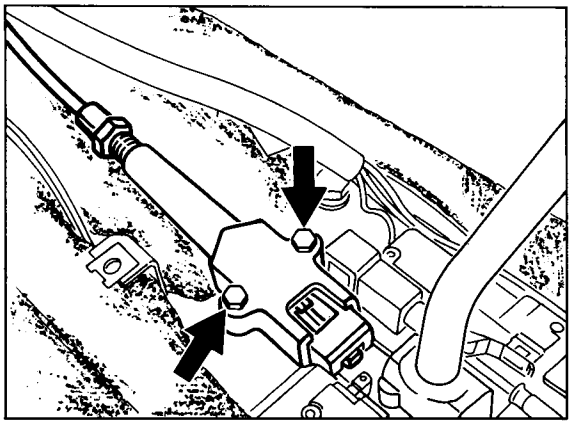

1067-37

7. Disengage bowden cable from pedal floorboard and from bracket for center console.

Installation

1. Assemble in reverse order, observing the following points.

2. Turn ignition lock to position „2" (Ignition on) and fit bowden cable to ignition lock.
Tightening torque: 2.5 Nm (2 ftlb)

3. Fit bowden cable valve body using sleeves and hexagon head bolts.
Tightening torque: 2.5 Nm (2 ftlb)

4. Set selector lever to position „P" and turn ignition lock to position „0".

Note

If the ignition lock cannot be turned to the 0 position, the bowden cable must be re-adjusted.

5. Adjust bowden cable, turning the cable sleeve on the valve body until the lock slide reaches a setting of 2 + 0.5 mm (refer to Fig.).

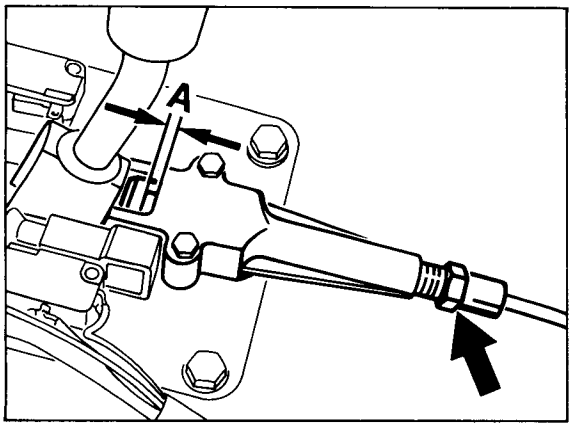

1081-37

A = 2 + 0.5 mm

6. Check operation of keylock and shiftlock.

Printed in Germany – XV, 1992

Checking keylock and shiftlock

Checking the keylock (ignition key lock)

Selector lever position	Position of release button	Keylock operation	Ignition key
P	not actuated	no	rotary, may be pulled off
P	actuated	yes	cannot be turned to pulloff position
R-N-D-3-2-1	not actuated actuated	yes	cannot be turned to pulloff position

Checking the keylock (selector lever lock)

Ignition key position	Release button status	Keylock operation	Selector lever
Pulled off or pulled position	locked	yes	locked
Position 1 or 2	not locked	no	not locked

Checking the shiftlock

Selector lever position	Ignition	Shiftlock operation	Brakes	Selector lever
P-R-N-D-3-2-1	off	no	actuated not actuated	not locked
P and N	on	yes	not actuated	locked
P and N	on	yes	actuated	not locked

Printed in Germany – XV, 1992

Removing and installing rear transmission case

Tools

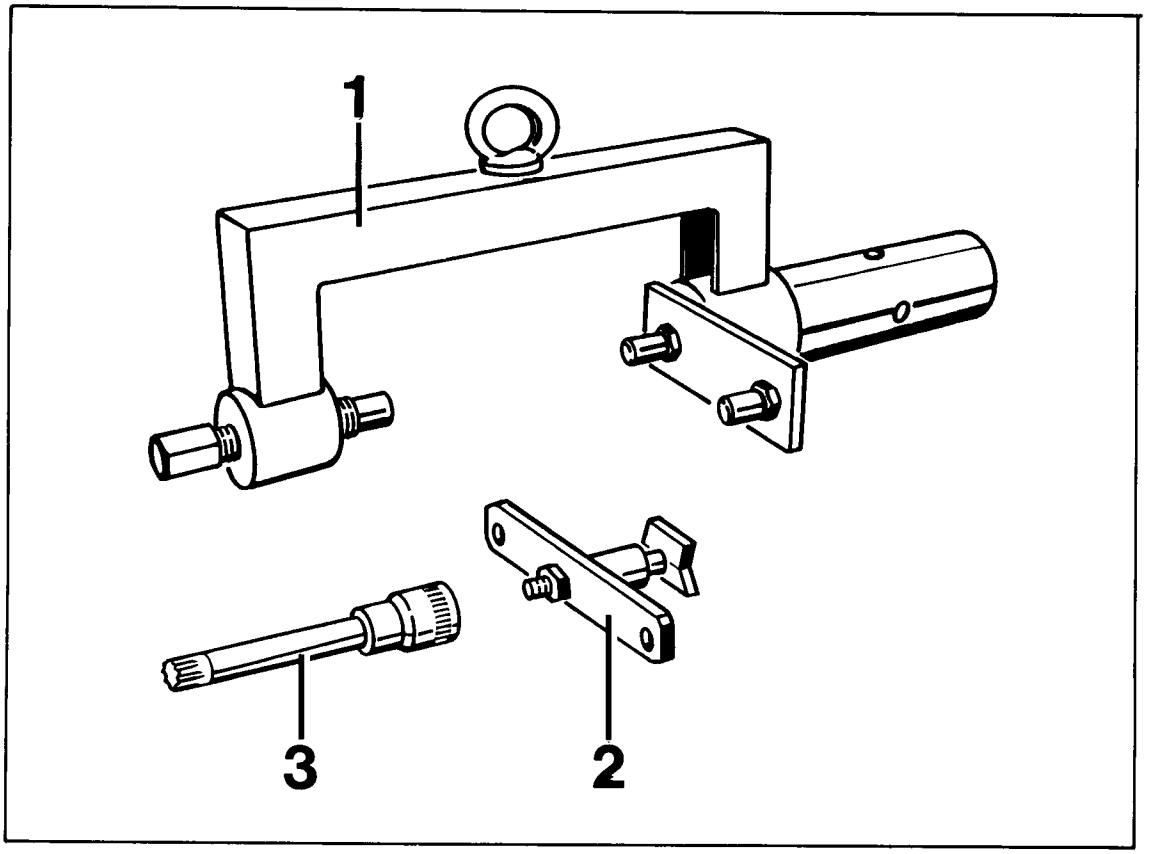

No.	Designation	Special tool	Order number	Explanation
1	Transmission holder	9324	000.721.932.40	
2	Holding device	9325	000.721.932.50	
3	socket key insert	9330	000.721.933.00	

Printed in Germany – XV, 1992

Removing and installing rear transmission case

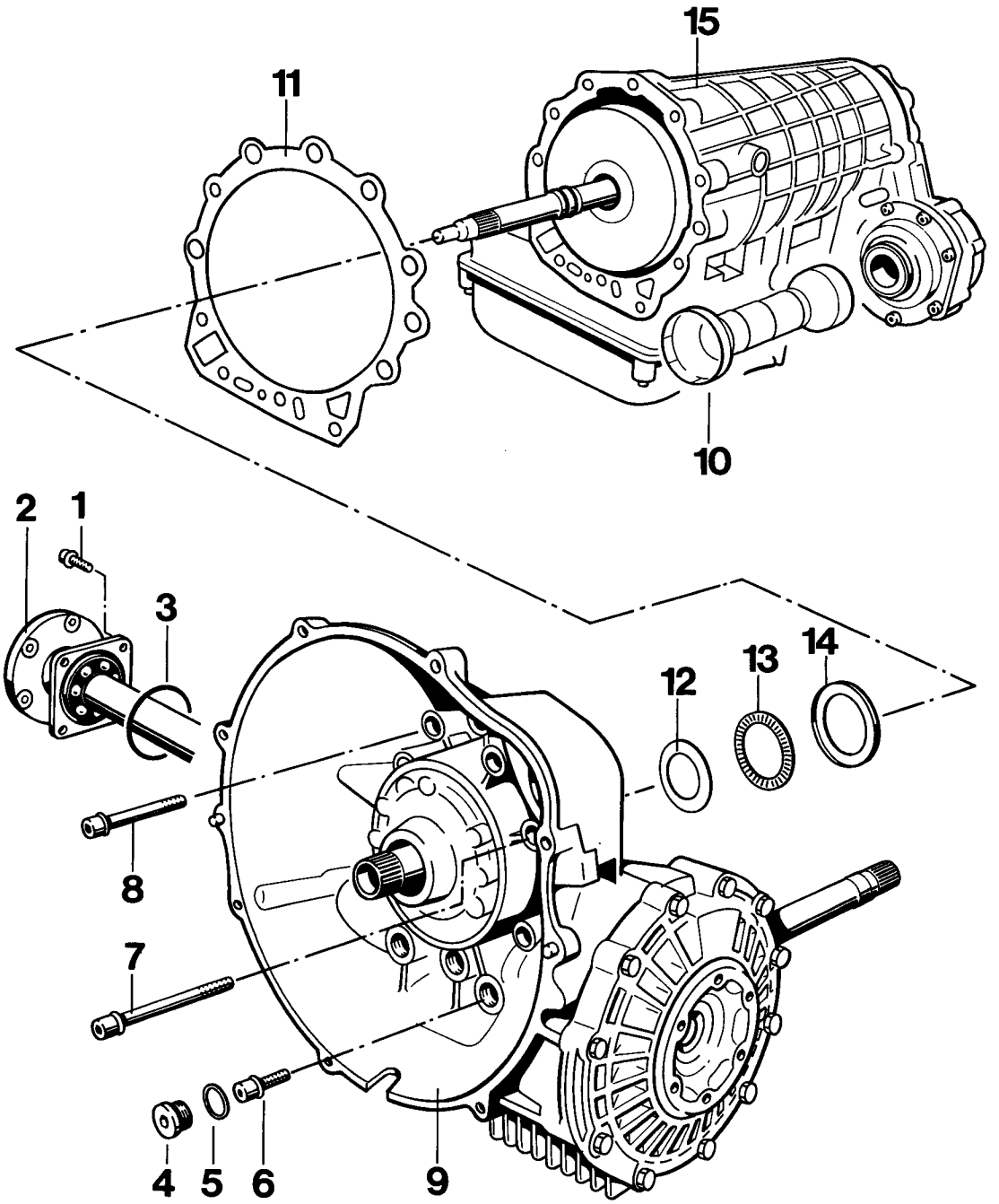

Printed in Germany – VI. 1990

No.	Designation	Qty.	Note: Removal	Installation (= ftlb)
1	Fillister head screw	4	Use Special Tool 9330 to remove	Tighten witht 23 Nm (17)
2	Joint flange	1		
3	O-ring	1		Replace, oil slightly
4	Screw plug	3		Tighten with 50 Nm (36)
5	Sealing ring	3		Replace
6	Fillister head screw	3	Remove with Torx insert T50	Tighten with 46 Nm (34)
7	Fillister head screw	3	Remove with Torx insert T50	Tighten with 46 Nm (34)
8	Fillister head screw	6	Remove with Torx insert T50	Tighten with 46 Nm (34)
9	Rear transmission case	1		
10	Protective tube	1		Large diameter to final drive
11	Seal	1		Replace, glue to case with a small quantity of grease (vaseline)
12	Shim	X	Note thickness for re-installation	Redertermine thickness if required (refer to page 38 - 171)
13	Needle cage	1		
14	Angle ring	1		Fit in correct position
15	Automatic transmission	1		Pay attention to installation position of clutch A. Make sure that the square drive shaft rings are correctly fitted. Coat the drive shaft with a small quantity of grease in the area of the square rings.

* Must be checked and, if required, corrected after each transmission installation.

Printed in Germany – XXI, 1994

Assembly instructions for removal and installation

Removal

1. Remove the transmission and torque converter.

2. Secure transmission on assembly block with holding device **9324**.

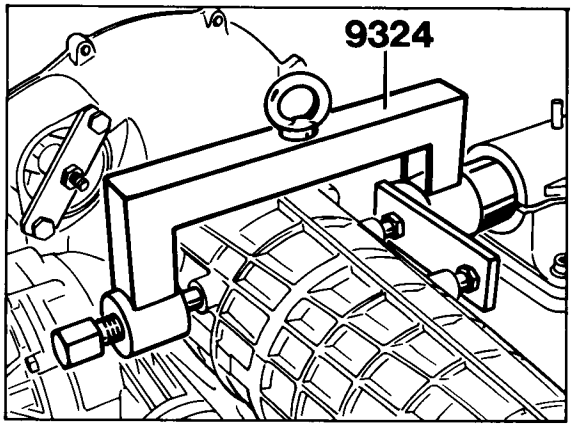

415-37

Installation

1. Check the installation position of clutch A. The installation depth has been reached when the distance **"C" is approx. 8.5 mm.**

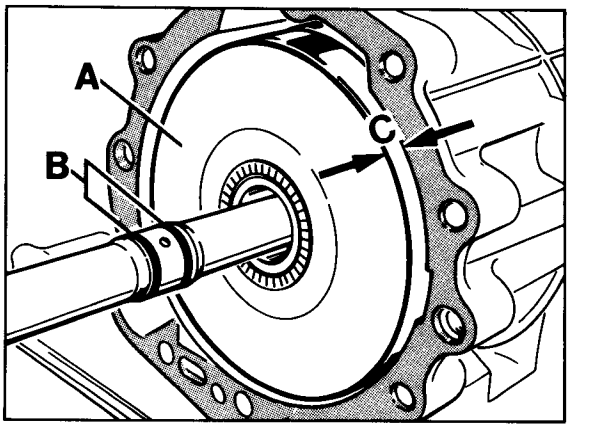

416-37

A = Clutch A
B = Square rings
C = Installation depths

Printed in Germany – XXI, 1994

Removing and installing the intermediate plate

Printed in Germany – VI, 1990

Removing and installing the intermediate plate

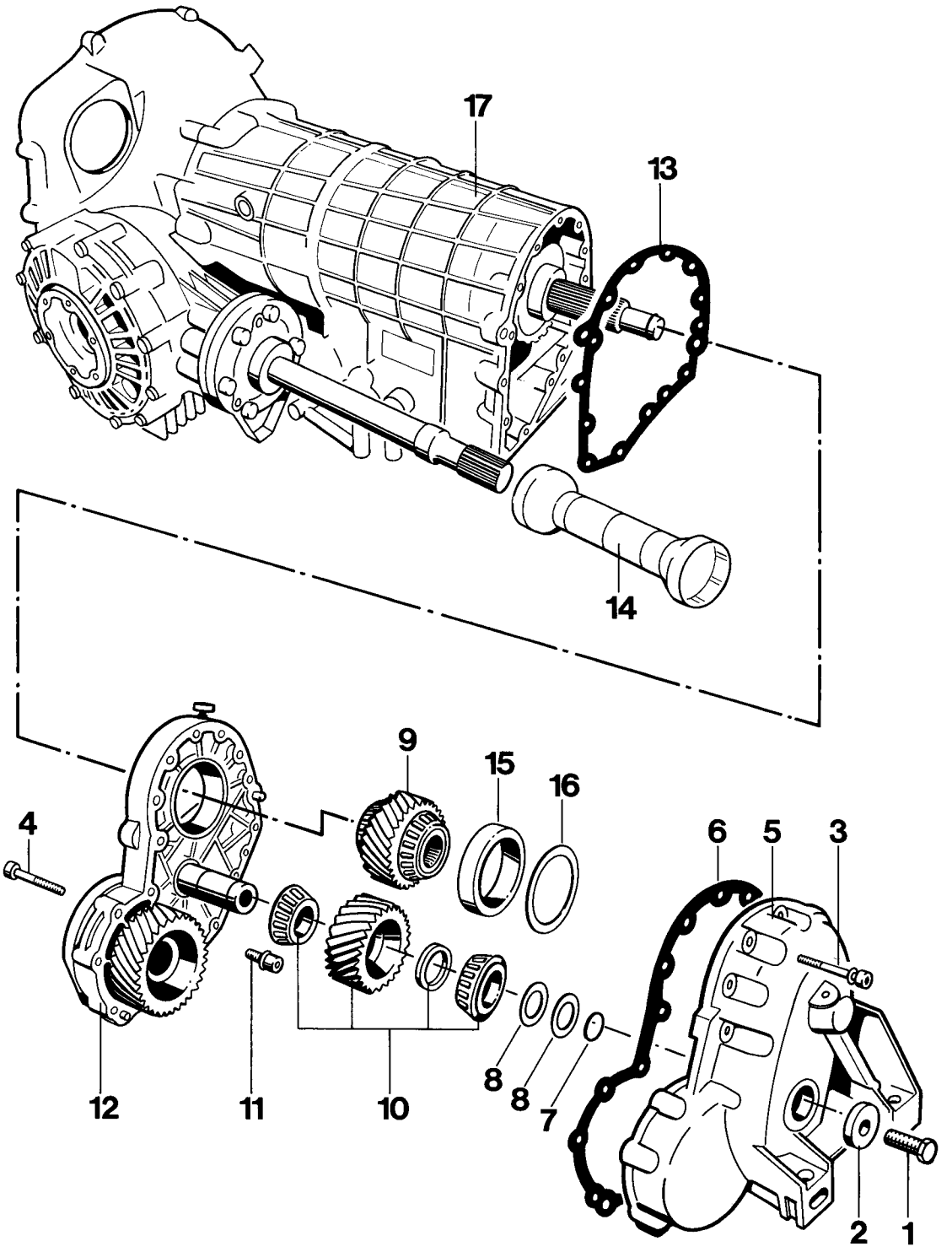

Printed in Germany – XV, 1992

No.	Designation	Qty.	Note: Removal	Installation
1	Hexagon screws	1		Tighten with 46 Nm
2	Washer	1		
3	Fillister head screw	11		Tighten with 23 Nm
4	Fillister head screw	6		Tighten with 23 Nm
5	Front transmission cover*	1		
6	Seal	1		Replace
7	O-Ring	1		Replace, oil with ATF
8	Shim	X	Note thickness for reinstallation	
9	Gear wheel with tapered-roller bearings*	1	Note correct position for reinstallation	Adjust preload if required
10	Gear wheel with bearing assembly*	1	Note correct position for reinstallation	Set by the manufacturer.
11	Fillister head screw	2		Tighten with 23 Nm
12	Intermediate plate*	1		
13	Seal	1		Replace
14	Protective tube	1		Large diameter to final drive
15	Tapper roller bearing outer race	1	Remove with internal puller (e.g. Schrem 60 - 70)	Heat transmission cover to approx. 120 deg. C and press in to stop
16	Adjusting shim	X	Record thickness for reinstallation	Redetermine thickness if required
17	Automatic transmission with final drive	1		

Note

The spur gear drive is only available as a complete set (intermediate plate, transmission cover and adjusted spur gears). No adjustment of the preload of the taper roller bearings is therefore required.

Printed in Germany - XXII, 1994

Dismantling and assembling intermediate plate

Tools

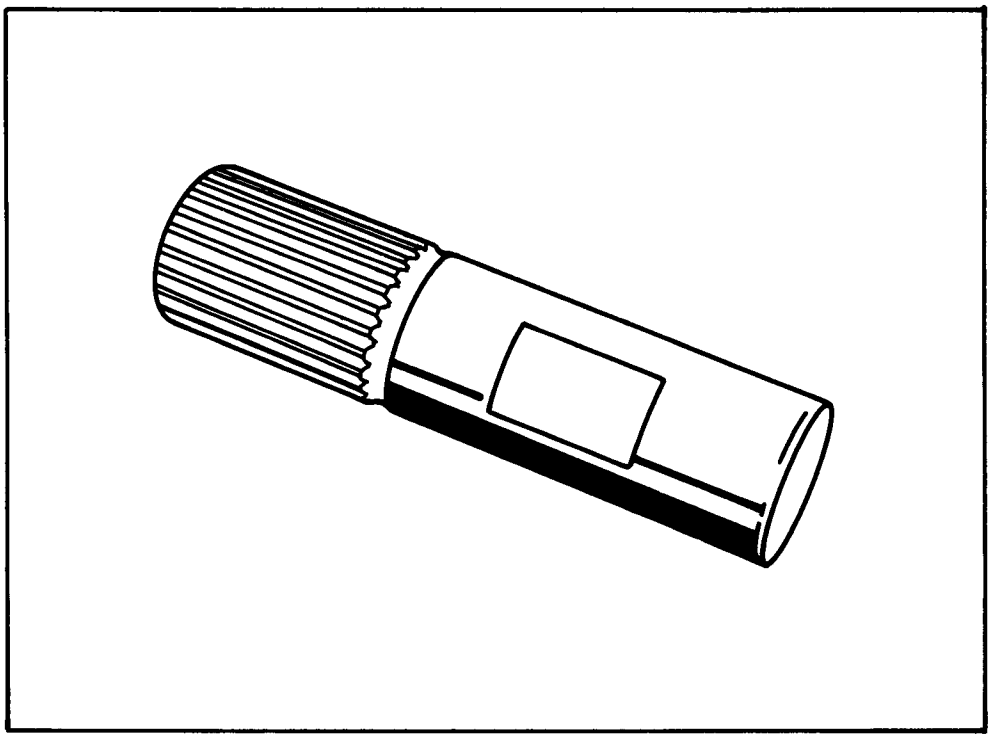

1027-37

No.	Designation	Special tool	Order number	Explanation
	Retaining device	9340	000.721.934.00	

Printed in Germany – XV, 1992

Dismantling and assembling intermediate plate

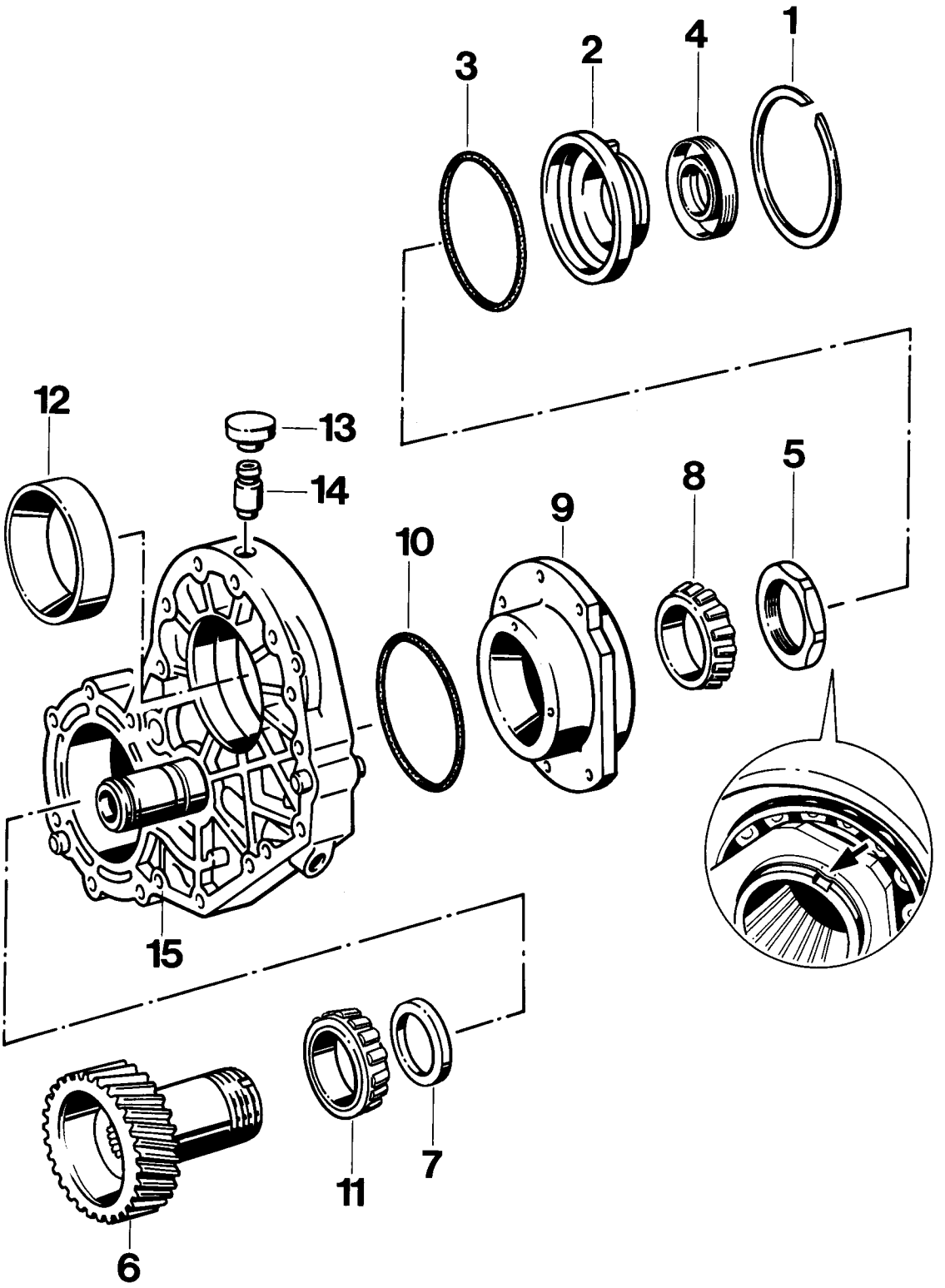

Printed in Germany – XV, 1992

No.	Designation	Qty.	Note: Removal	Installation
1	Snap ring	1		
2	Bearing cover	1	Grab at lugs to lift out	
3	Round seal	1		Replace, coat with ATF fluid
4	Shaft seal	1		Fitting depth 2.0 ± 0.5 mm
5	Lock nut	1	Fit Special Tool 9340 into vise. Put intermediate plate into position and undo nut.	Tighten to 250 Nm (184 ftlb). Lock by upsetting the flange (2 x 180°)
6	Helical gear	1	Press out using a hydraulic press.	
7	Adjuster ring*	X	Record thickness for reassembly	Thickness can only be determined by manufacturer
8	Inner race of taper roller bearing*	1	Mark for reassembly	Heat to approx. 120°C and press on
9	Bearing cover *	1		
10	Round seal	1		Replace, coat with ATF fluid
11	Inner race of taper roller bearing*	1	Remove across assembly bore of helical gear. Mark for reassembly.	Heat to approx. 120°C and press into place
12	Outer race of taper roller bearing	1		Heat intermediate plate to approx. 120°C and press into place
13	Breather cover	1	Lever off	
14	Breather tube	1	Pull out	Press in to stop
15	Intermediate plate	1		

Note

The parts identified by an * have been preadjusted by the manufacturer.

Disassembling and assembling the parking lock

Printed in Germany – VI, 1990

Disassembling and assembling the parking lock

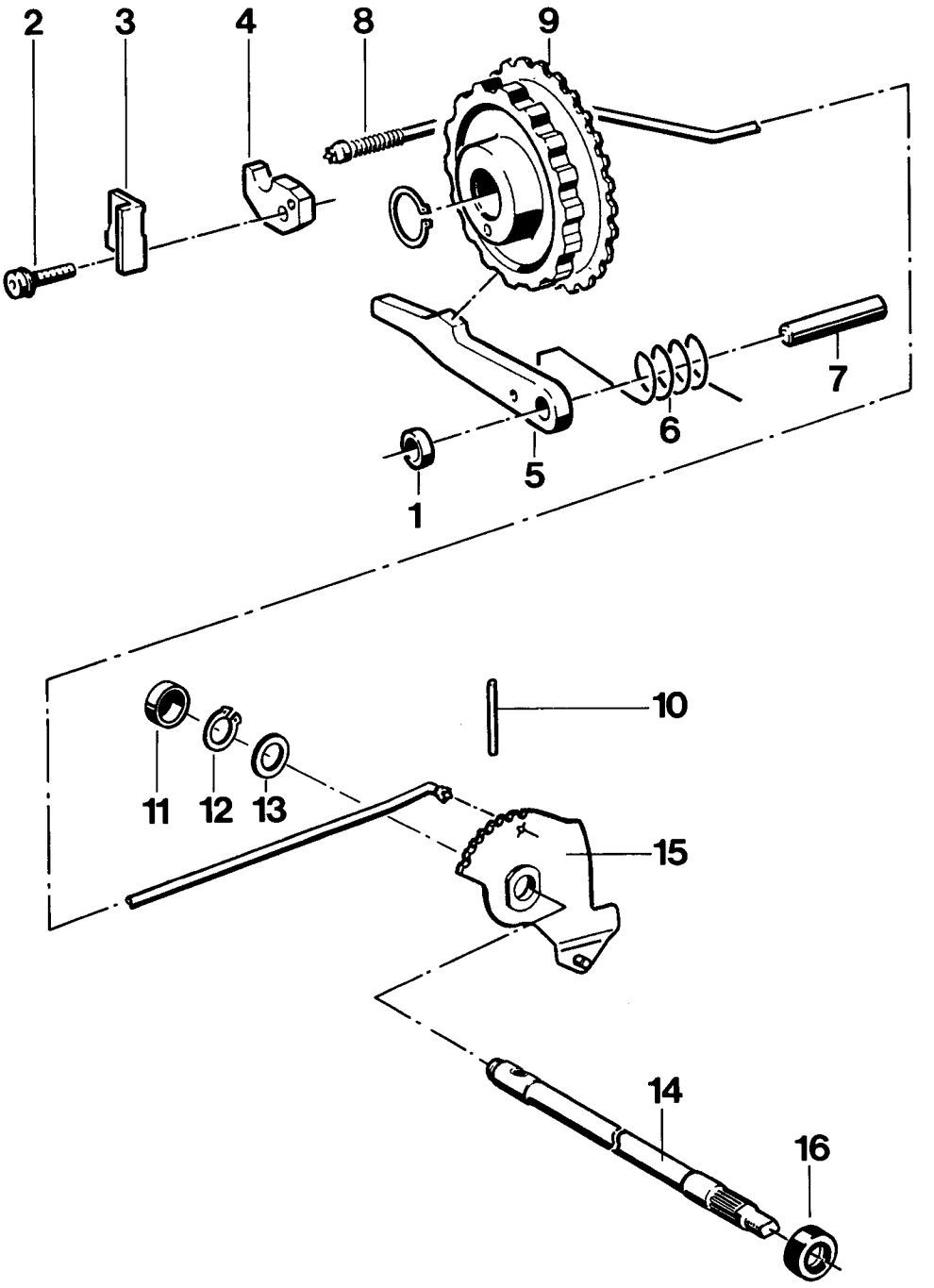

Printed in Germany – VI, 1990

No.	Designation	Qty.	Note: Removal	Installation
1	Bushing	1		
2	Fillister head screw	1	Remove with Torx insert T27	Tighten with 10 Nm
3	Guide plate	1		
4	Guide piece	1		
5	Catch	1		
6	Spring	1		Insert in correct position
7	Pin	1		
8	Circlip	1		
9	Parking lock wheel	1		Make sure that the square ring is correctly seated
10	Clamping pin	1		
11	Protective cap	1	Drive out to the outside by gentle blows on shaft No. 14	Replace
12	Circlip	1		
13	Shim ring	1		
14	Shaft	1	Mark installation position	Insert in correct position
15	Notched disk	1		
16	Rotary shaft seal	1	With transmission in built-in condition, remove position switch and carefully lever out with a suitable screwdriver	Wind plastic insulating tape around the shaft toothing as an assembly aid, slightly oil sealing lip and press in flush

Printed in Germany – VI, 1990

Work instructions for disassembling and assembling

Disassembling

1. Remove transmission.

2. Remove intermediate plate.

Note

Part Nos. 11 to 15 can be removed only when the rear transmission case and the ATF pan have been dismantled.

Assembly

1. Replace O-ring on output shaft.

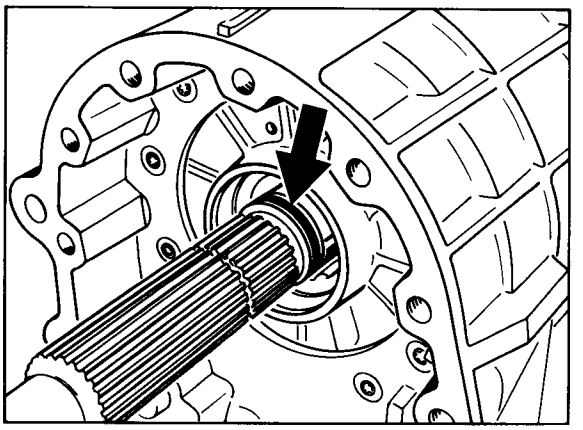

417-37

2. Insert spring for catch in correct position.

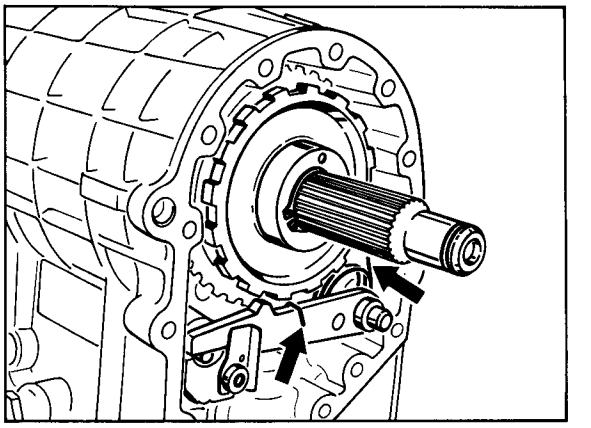

418-37

Printed in Germany – VI, 1990

Dismantling and assembling transmission

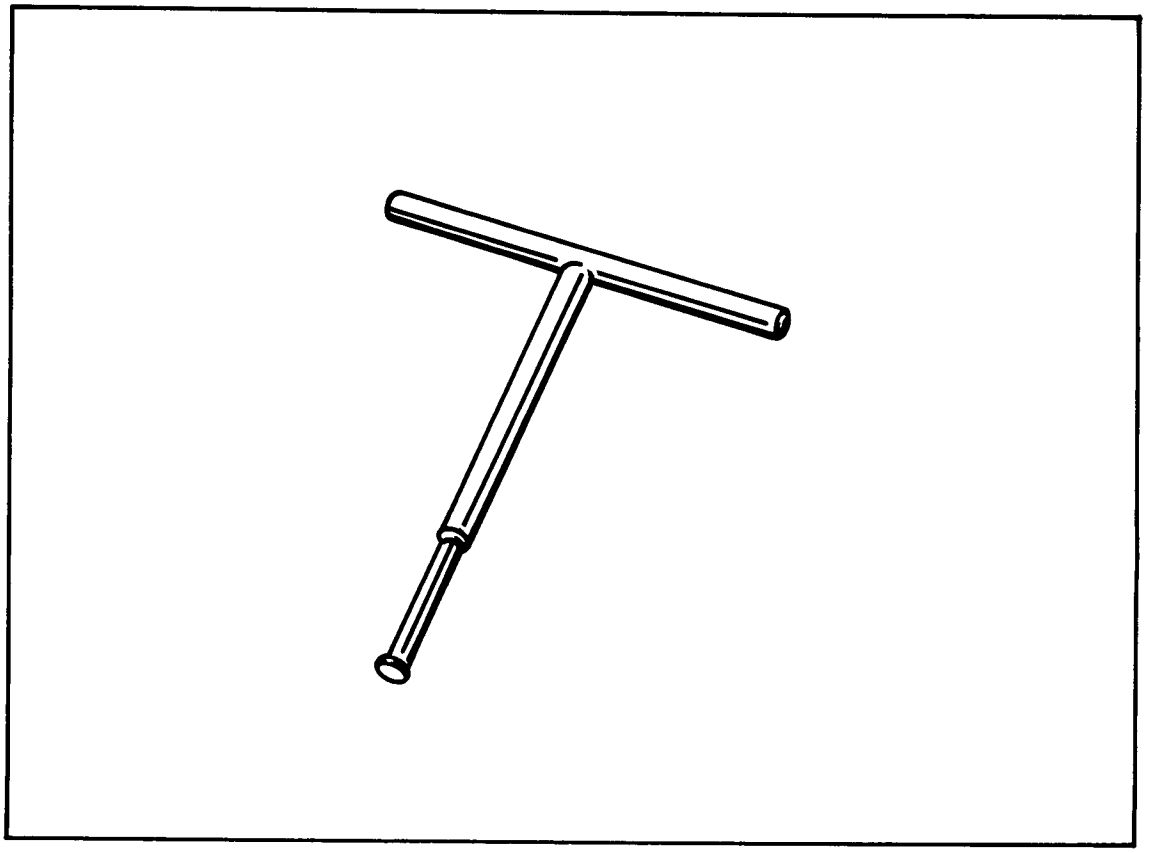

No.	Designation	Special tool	Order number	Explanation
	Removal handle	9327	000.721.932.70	

Printed in Germany – XV, 1992

Dismantling and assembling transmission

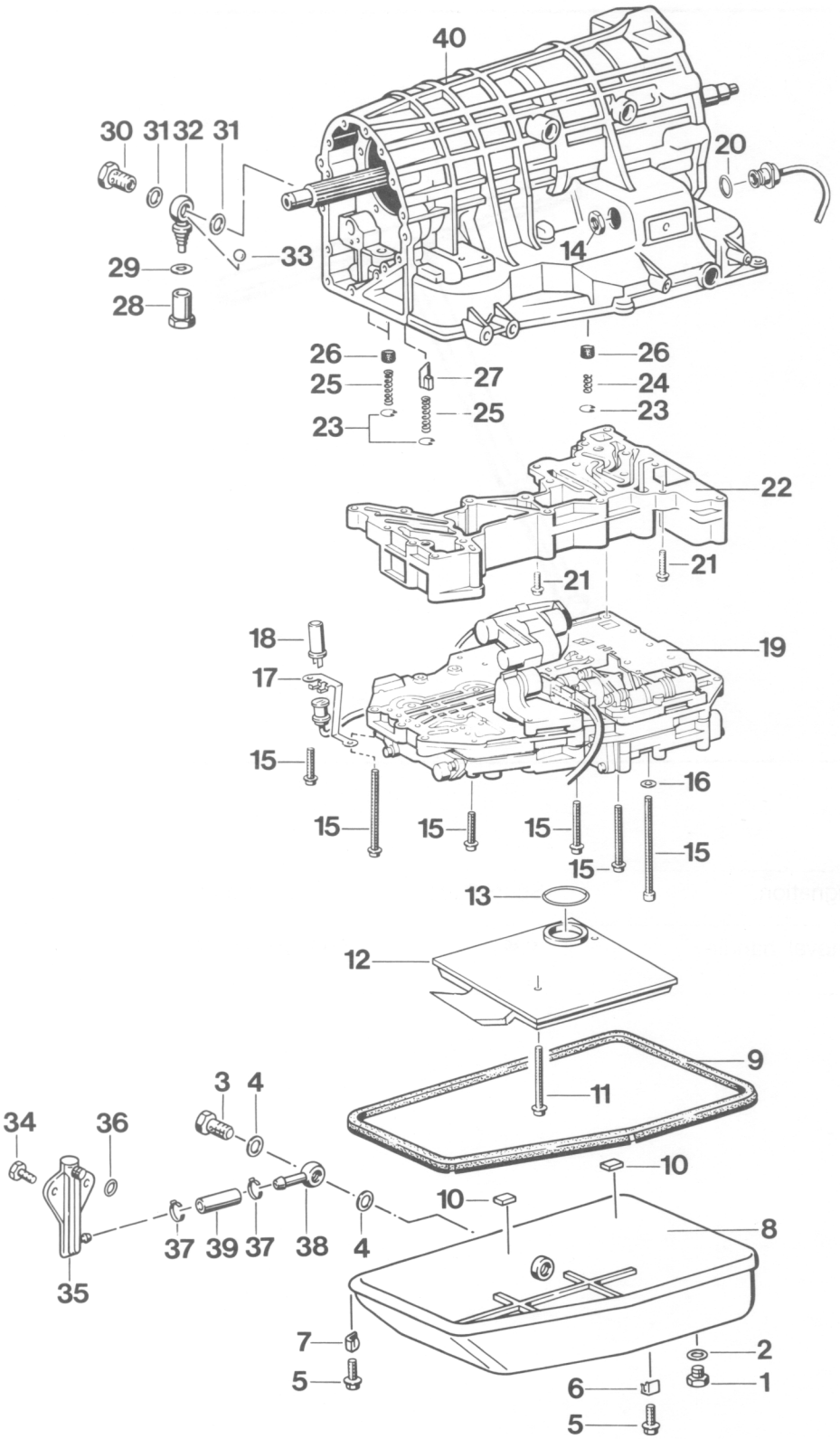

No.	Designation	Qty.	Note: Removal	Installation
1	Plug	1		Tighten to 40 Nm (29 ftlb)
2	Seal	1		Replace
3	Banjo bolt	1		Tighten to 40 Nm (29 ftlb)
4	Seal	2		Replace
5	Hexagon head bolt	6		Tighten to 6 Nm (4 ftlb)
6	Bracket (straight leg)	2		Short legs must force on the ATF pan
7	Bracket (curved leg)	4		Short legs must force on the ATF pan
8	ATF pan	1		
9	Gasket	1		
10	Magnet	2		Place into grooves in ATF pan
11	Pan head screw (M 6 x 65)	3		Tighten to 8 Nm (6 ftlb)
12	ATF strainer	1		
13	Round seal	1		Replace
14	Hexagon nut	1		Tighten to 12 Nm (9 ftlb)
15	Pan head screw	14		Observe correct length, tighten to 8 Nm (6 ftlb)
16	Spring washer	1		
17	Bracket	1		
18	Inductive rpm pickup	1		
19	Hydraulic control unit with wiring harness	1		The straight surface on the harness socket must point towards the outside
20	Round seal	1		Replace
21	Pan head screw	11		Observe correct length, tighten to 8 Nm (6 ftlb)
22	Adapter	1		
23	Snap ring	7		

Printed in Germany – XV, 1992

No.	Designation	Qty.	Note: Removal	Installation
24	Thrust spring (short)	4		
25	Thrust spring (long)	3		
26	Sealing sleeve	6	Pull out with Special Tool **9327**	Press in to stop using a suitable mandrel
27	Sealing sleeve	1	Pull out with Special Tool **9327**	Press in to stop, observing correct position
28	Sealing nut	1		Tighten to 30 Nm (22 ftlb)
29	Seal	1		Replace
30	Banjo bolt	1		Tighten to 40 Nm (29 ftlb)
31	Seal	2		Replace
32	Flange	1		
33	Ball (6 mm dia.)	1		
34	Countersunk screw	2		Tighten to 5 Nm (4 ftlb)
35	ATF indicator tube	1		
36	Sealing ring	1		Replace
37	Hose clamp	2		
38	Flange	1		
39	Hose	1		
40	Transmission case	1		

Printed in Germany – XV, 1992

Dismantling and assembly notes

Dismantling

1. Remove and install rear transmission case (page 37 - 103).

2. Remove and install intermediate plate (page 37 - 107).

3. Remove and install parking lock (page 37 - 111).

4. Drain ATF fluid.

5. Unscrew 13 mounting screws (**head dia. 12 mm**) for hydraulic control unit and lift off control unit.

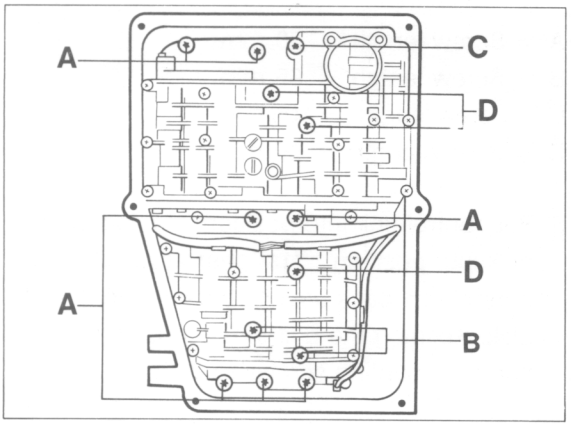

399-38

6. Pull sealing sleeves out of the bores, using Special Tool **9327**.

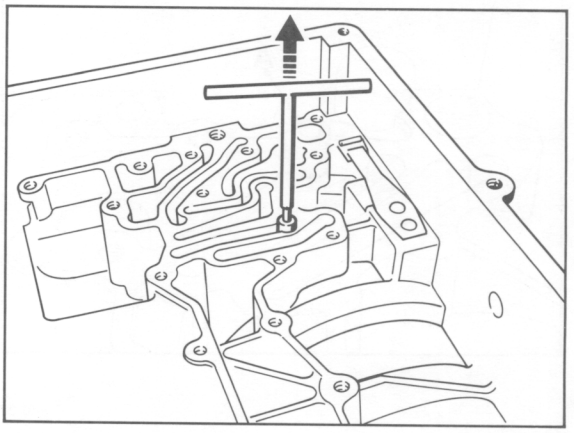

838-37

Assembly

1. Using a suitable mandrel, press sealing sleeves into the bores of the transmission case. Make sure the sleeves are not tilted or damaged.

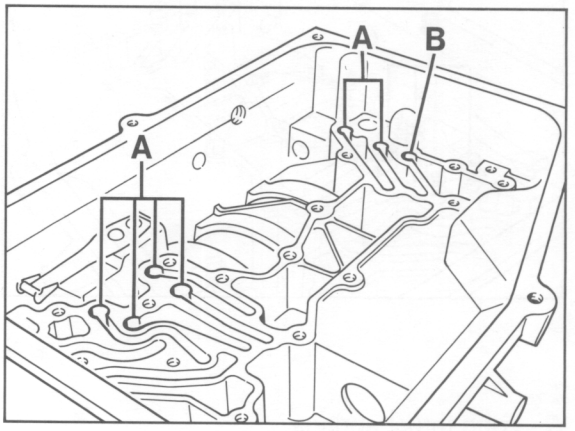

839-37

A – short sealing sleeves
B – bevelled sealing sleeve for lubrication pressure feed

2. Installation position of the bevelled sealing sleeve for lubrication pressure feed.

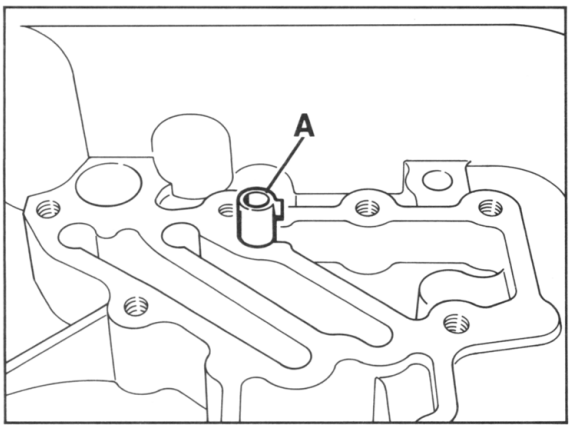

840-37

A - Sealing sleeve

3. Place thrust springs into position and locate with snap rings.

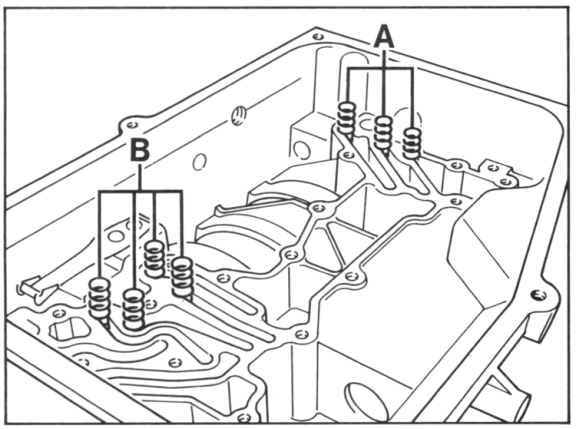

881-38

A - Long thrust springs
B - Short thrust springs

4. Fit wiring harness to transmission case (straight surface on socket points to outside), place control unit into position and tighten all mounting screws lightly.

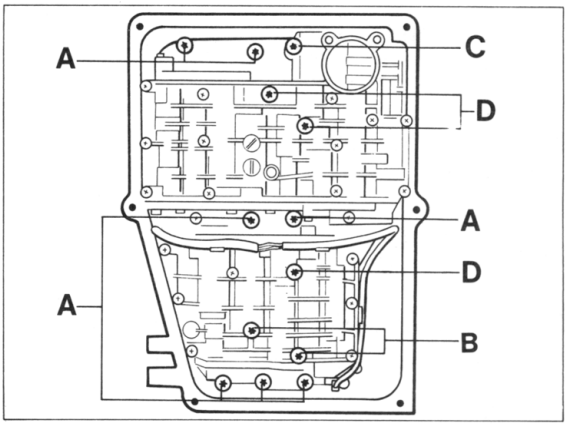

399-38

A = Screw length = 80 mm
B = Screw length = 65 mm
C = Screw length = 105 mm
D = Screw length = 60 mm

5. Put control unit into position, placing detent disk into position 1 (1st gear) and pushing control unit back until it contacts the detent disk. Keeping the unit in this position, tighten mounting screws to **8 Nm**.

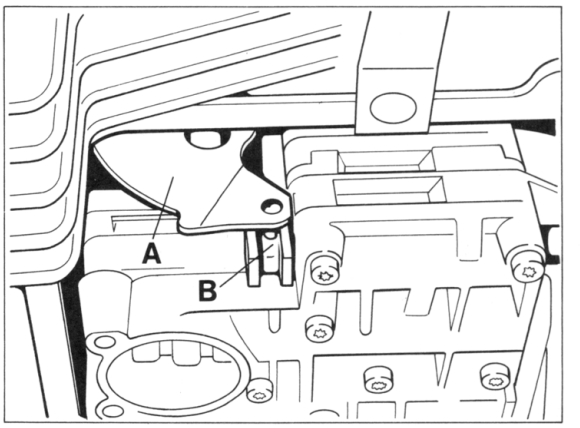

385-38

A – Detent disc
B – Selector valve

Printed in Germany – XV, 1992

6. Place inductive rpm pickup into position and fit retainer plate in such a manner that the lugs engage into the grooves of the connector.

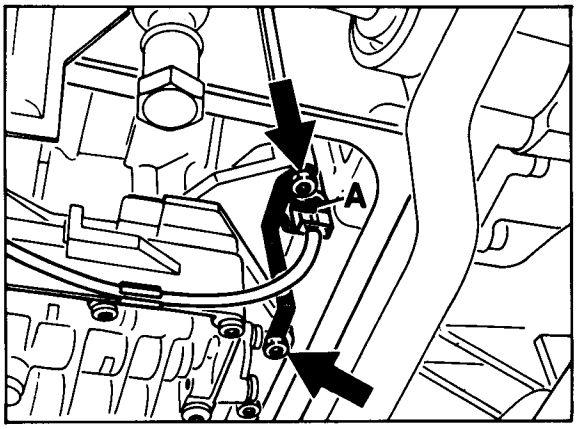

390-38b

Dismantling and assembling transmission

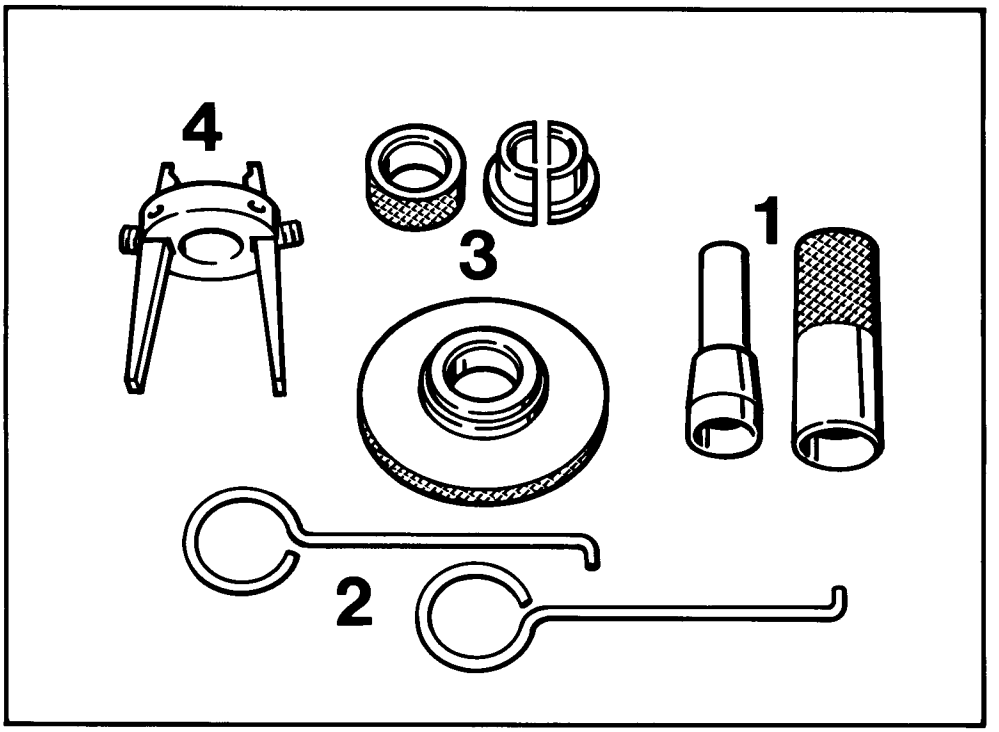

897-37

No.	Designation	Special tool	Order number	Explanation
1	Assembly sleeve	9331	000.721.933.10	
2	Puller hook	9328/1	000.721.932.81	
3	Retaining device	9329/1	000.721.932.91	
4	Clamp	9334	000.721.933.40	

Printed in Germany – XV, 1992

Dismantling and assembling transmission

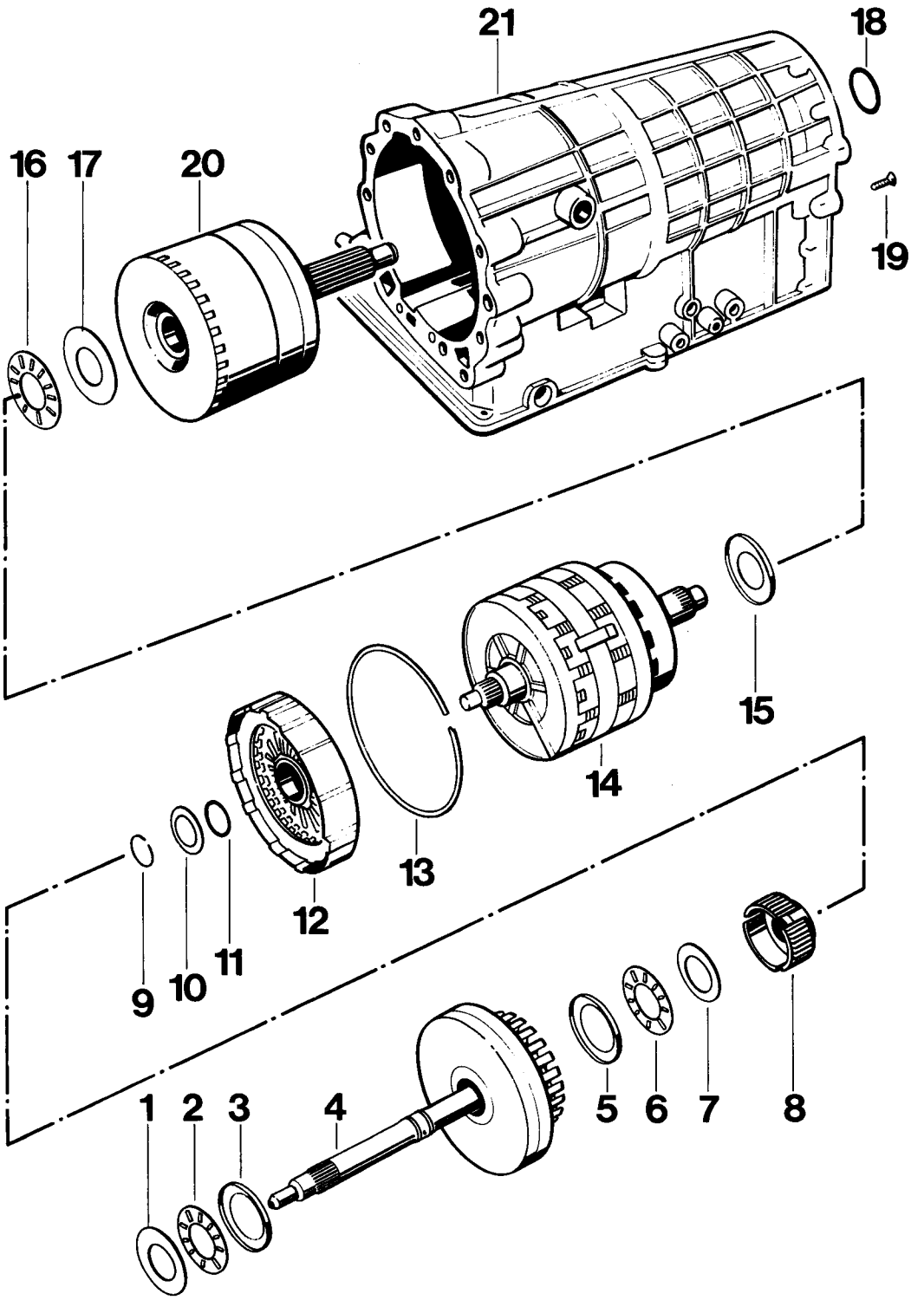

Printed in Germany – XV, 1992

No.	Designation	Qty.	Note: Removal	Installation
1	Adjusting shim	X	Record thickness for reassembly	Check shim thickness whenever the transmission has been dismantled and redetermine correct thickness as required (refer to page 38 - 171)
2	Axial needle roller cage	1		
3	Angled disc	1		Install in correct position
4	Drive shaft with coupling A	1	For dismantling and assembly, refer to page 38 - 168	
5	Angled disc	1		Use grease (vaseline) to stick to drive shaft in correct position
6	Axial needle roller cage	1		
7	Thrust washer	1		
8	Disc carrier	1		
9	Snap ring	1		
10	Support ring	1		
11	Round seal	1		Replace, fit with Special Tool **9331**
12	Clutch B	1	Pull out using Special Tool **9328/1**. For dismantling and assembly, refer to page 38 - 161	Check rectangular ring for correct position
13	Snap ring	1		
14	C/D pack	1	Lift out with Special Tool **9329/1** and place on Special Tool **9314**. For dismantling and assembly, refer to page 38 - 143	Install with Special Tool **9329**/1, making sure the 4 oil feed bores line up with the bores for the sealing sleeves
15	Angled disc	1		Use grease (vaseline) to stick to spider shaft, observing correct position
16	Axial needle roller cage	1		

Printed in Germany – XV, 1992

No.	Designation	Qty.	Note: Removal	Note: Installation
17	Thrust washer	1		
18	Round seal	1		Replace
19	Countersunk screw (Torx bit TX 30)	10		Tighten to 10 Nm (7 ftlb). Observe correct tightening torque, otherwise pressure losses at the clutch may result
20	4th gear tower	1	Use Special Tool **9334** to lift out	Insert with Special Tool **9334**, making sure the three oil feed bores of cylinder E and transmission case line up with each other
21	Transmission case	1		

Printed in Germany – XV, 1992

Dismantling and assembly notes

Dismantling

1. Remove round seal from output shaft and put Special Tool **9334** into place.

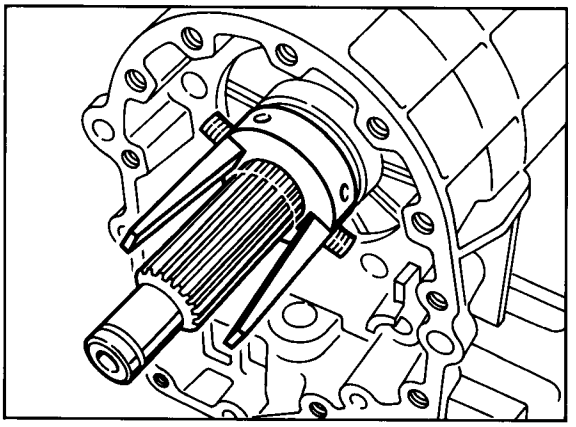

891-37

2. Pull out clutch B using Special Tool **9328**/1, lifting clutch until a resistance is felt, press back down again and pull out in one go.

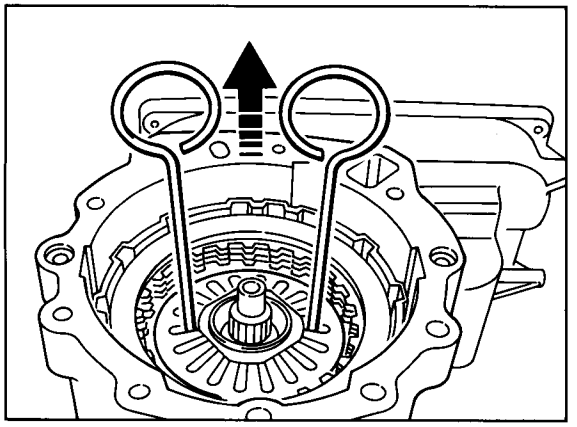

892-37

3. Take out entire brake pack C'/C/D using Special Tool **9329/1**.

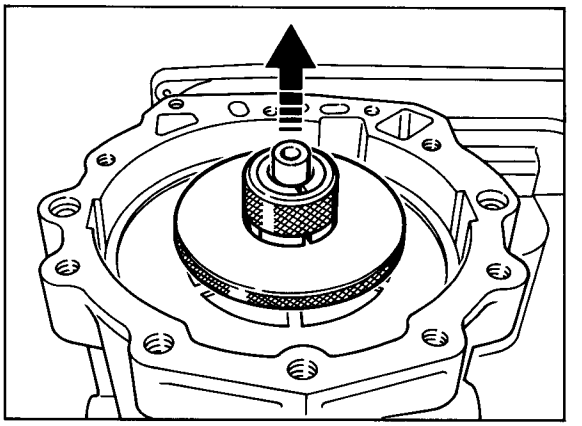

893-37

Assembly

1. To prevent the preassembled 4th gear tower from separating again, allow Special Tool **9334** to engage into the groove of the round seal.

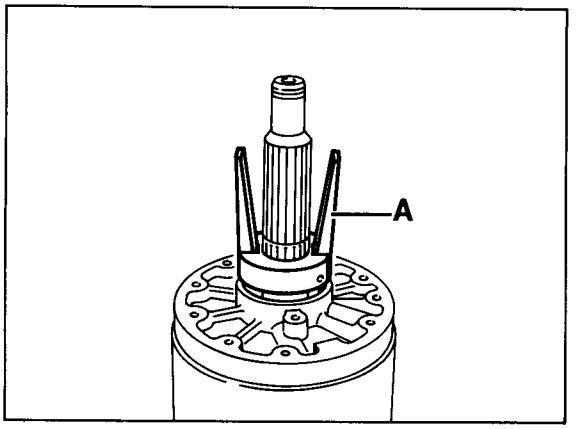

885-37

2. Place 4th gear tower minus planetary gear set and sun wheel into housing, observing correct position. The three oil feed bores of cylinder E and transmission case must line up.

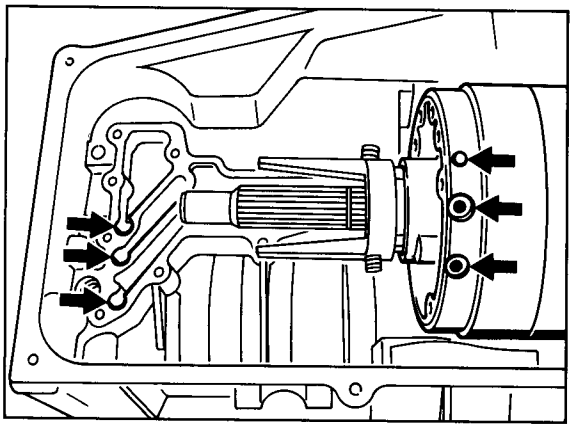

894-37

3. Place axial needle roller cage, thrust washers, planetary set and sun wheel into place (refer to page 38 - 122).

4. Place brake pack C'/C/D with Special Tool **9329/1** into transmission case, making sure the 4 oil feed bores line up with the bores for the sealing sleeves.

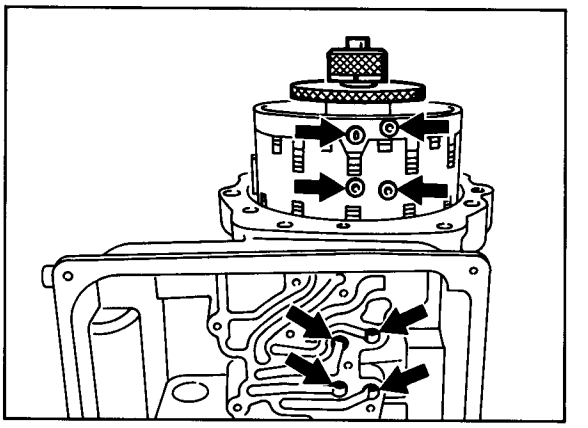

895-37

Printed in Germany – XV, 1992

5. Place complete clutch assembly B into housing and press down to stop. Slip round seal onto inner part of Special Tool **9331** up to the taper and use outer section to push it in to stop.
   Fit support ring and snap ring in the same way.

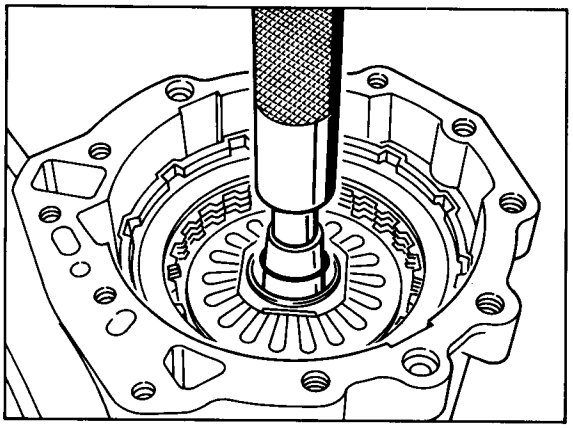

914-37

6. Place drive shaft complete with clutch A into housing and rotate cylinder A to and fro until the teeth, the disc carrier and the discs engage fully with each other. The correct position is achieved if the cylinder face protrudes by approx. 8.5 mm beyond the housing face.

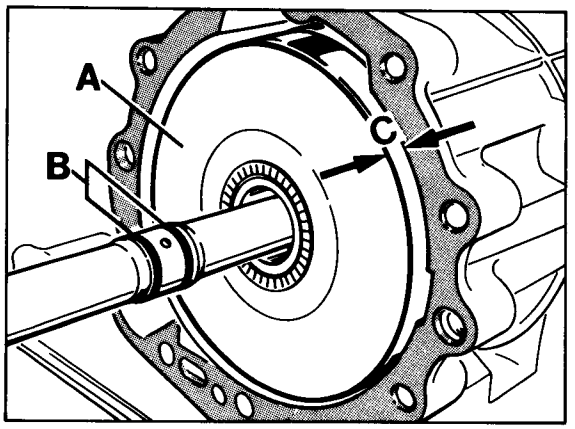

416-37

A – Clutch A
B – Rectangular rings
C – Fitting depth

Checking the ATF fluid level

The prescribed fluid level is extremely important for perfect functioning of the automatic transmission.

Preconditions for checking:

- Transmission underbody cladding removed
- Vehicle must be horizontal
- Engine operating at idling speed
- Hand brake applied
- Selector lever in position "P"
- ATF temperature 80°C

Check ATF level at 80°C.

Note

The ATF capacity was increased by 0.5 l. The ATF level therefore rises and the 80°C check marks move further up on the oil level tube. Refer to imaginary and dotted lines in the close-up insert.
When checking the ATF level, make sure the fluid level is between those two lines (maximum level **15 mm above** the **80°C MAX mark** present, lowest level approx. **3 mm below** the **80°C MIN mark** present).

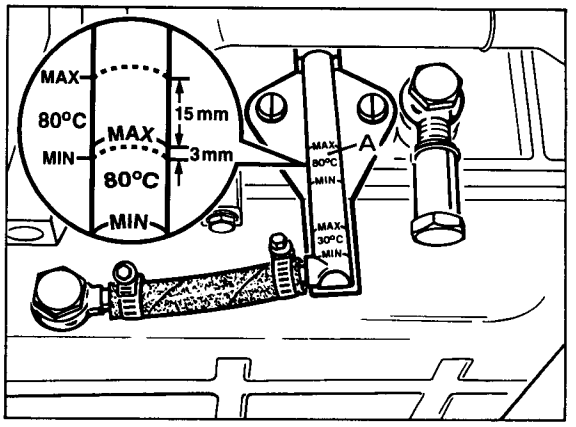

1958-38

A = invalid 80°C mark

The exact ATF temeprature can be determined with the system tester 9288.

If necessary, top up missing ATF fluid via the quick-fill device (also refer to page 38-103).

Changing ATF fluid and cleaning the ATF strainer

Capacity: approx. 9.5 l
Change quantity: approx. 3.5 l

Oil type:
ATF-Dexron IID

The ATF fluid must be changed and the ATF strainer cleaned every 40,000 km

When changing the ATF fluid, the vehicle must be horizontal and the engine switched off.

Drain ATF fluid, remove ATF pan and ATF strainer (refer to page 38-109).

Thoroughly clean the strainer and pan.

Fit the ATF strainer with a new O-ring. Tighten the fixing screws with **8 Nm (6 ftlb)**.

Fit the ATF pan with seal. Tighten the fixing screws with **8 Nm (6 ftlb)**.

Fill with ATF fluid:

First, fill ATF fluid up to the 30°C max. mark via the quick-fill connection with the engine stationary.

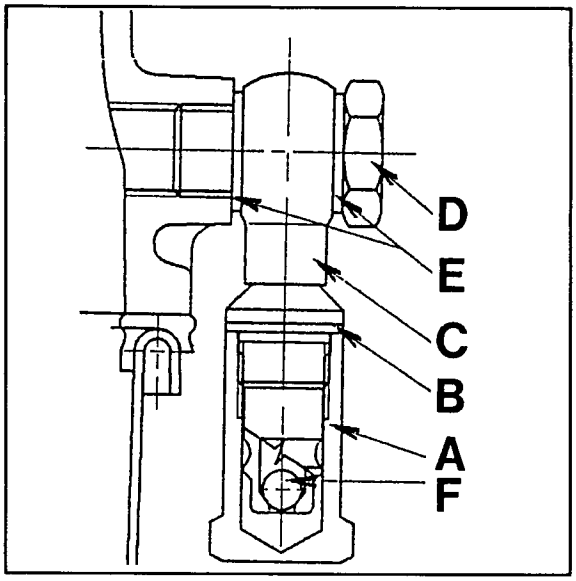

391-38

A = Hexagon cap nut (tightening torque 30 Nm = 22 ftlb)
B = Sealing ring (replace)
C = Quick-fill connection

Printed in Germany - XXII, 1994

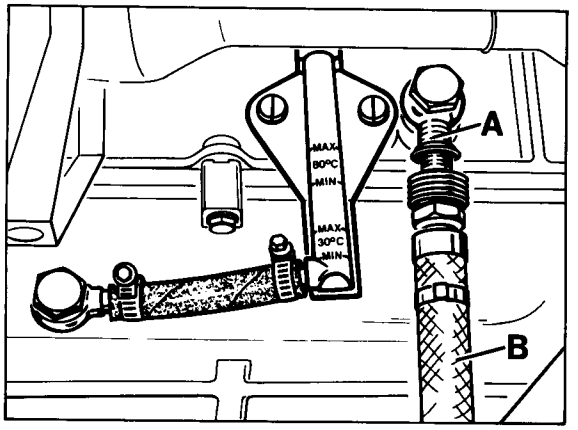

388-38

A = Quick-fill connection
B = Hose from filling device

Start engine in selector lever position “P” and allow to run at idle speed. Observe the ATF level in the oil level pipe and top up to the 30°C max. marking immediately if required.

Note

The ATF level in the transmission changes with the fluid temperature.

Drive the transmission warm and check the ATF fluid at 80° C.
Be sure to observe the note on page 38-101.

Here, the fluid level must be between the 80°C min. and max. marks.

The exact ATF temperature can be determined with the system tester 9288.

Flushing ATF cooler and lines

Information

If the ATF is carbonized, or if there is sludge or evidence of lining abrasion in the ATF sump, it is not sufficient merely to repair or replace the gearbox; the ATF cooler and line system must be flushed with ATF.

Attach additional hose of ATF filling device (see Workshop Manual Group 3/4) to ATF line with conventional twin connecting piece and flush out cooler and line system using filling device.

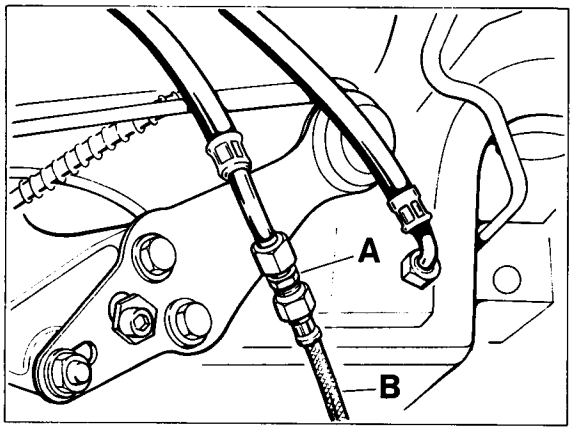

490-38

A = Twin connecting piece M 16 x 1.5 with conical seal

B = Additional hose

Removing and installing ATF cooler

Printed in Germany – VII, 1990

Removing and installing ATF cooler

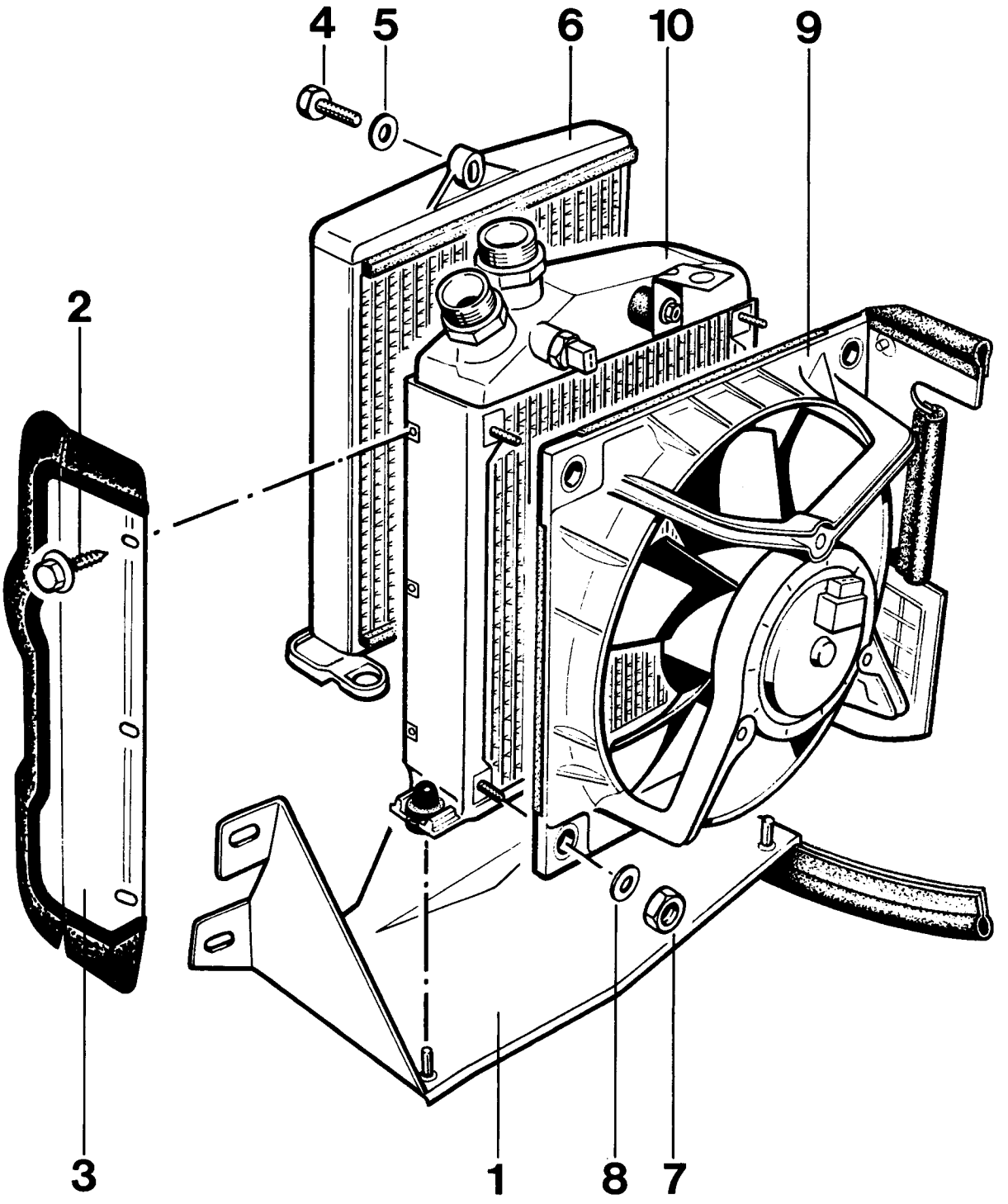

No.	Designation	Qty.	Note: Removal	Installation
1	Bracket	1		
2	Washer-and-screw assembly	3		
3	Air deflector	1		
4	Hexagon screw	1		Tighten to 10 Nm (7.3 ftlb)
5	Washer	1		
6	ATF cooler	1		

Printed in Germany – VII, 1990

Removing and installing ATF cooler

Information

The ATF cooler is located in the wheel house in front of the front right-hand wheel. It is attached to the engine oil cooler and is ventilated by the engine oil cooler's two-stage electric blower.

Removal

1. Remove front wheel house liner and lower panel

2. Disconnect ATF lines and seal with suitable plugs.

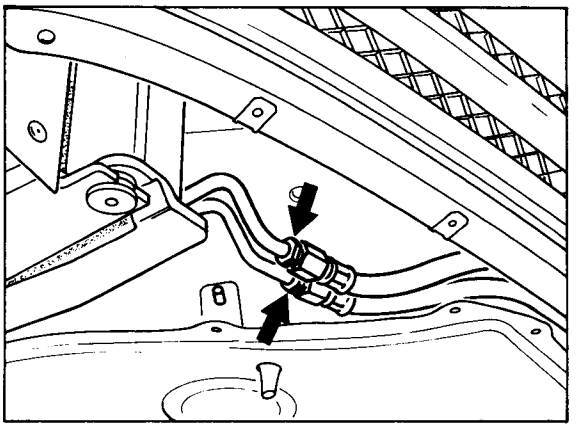

489-38

3. Unfasten retaining bracket on headlamp housing.

4. Remove bracket, undoing three self-locking hexagon nuts (M8) on the wheel arch and one (M6) for the diagonal brace.

5. Remove air deflector.

6. Remove hexagon screw and take out ATF cooler (illustration shows cooler removed).

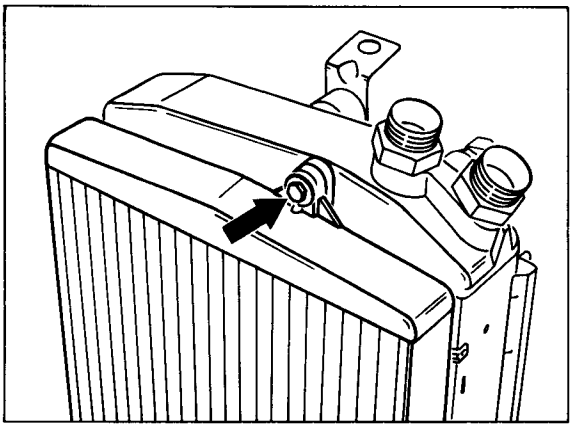

487-38

Note

Do not disconnect oil lines from engine oil cooler. Cooler remains in wheel house.

7. Remove ATF lines on cooler.

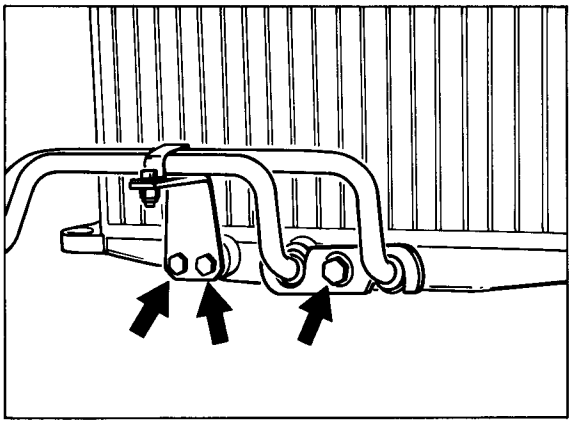

488-38

Installation

Tightening torques: (= ftlb)

Connection ATF line	= 30 Nm (22.0ftlb)
Retaining bracket to headlamp housing	= 23 Nm (16.9 ftlb)
Bracket to wheel house	= 23 Nm (16.9 ftlb)
Diagonal brace to bracket	= 10 Nm (7.3 ftlb)
ATF cooler to engine oil cooler	= 10 Nm (7.3 ftlb)
Bolt to ATF cooler	= 10 Nm (7.3 ftlb)
Retaining bracket to ATF cooler	= 6 Nm (4.4 ftlb)
Retaining plate to retaining bracket	= 3 Nm (2.2 ftlb)

1. Installation is carried out in reverse order.

2. Replace O-rings for ATF lines on cooler.

3. Check that rubber edging strips on fan housing and bracket fit properly.

4. Check ATF level and if necessary top up.

Removing and installing the inductive speed sensor

Removing

1. Remove the transmission underbody cladding and ATF pan (refer to page 38-109).

2. Remove the holder for the inductive sensor and pull out sensor.

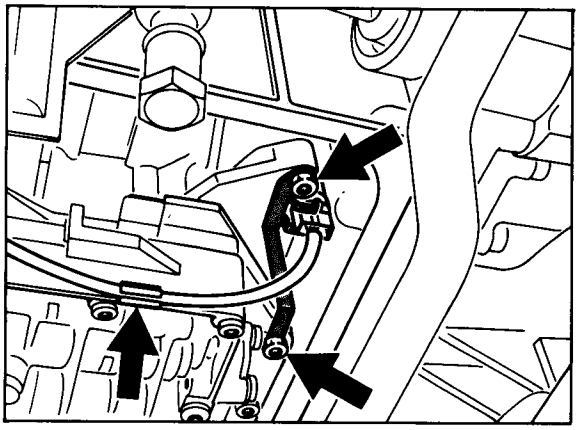

390-38a

Insert the sensor and mount the holding plate so that the lugs engage in the groove on the connector.

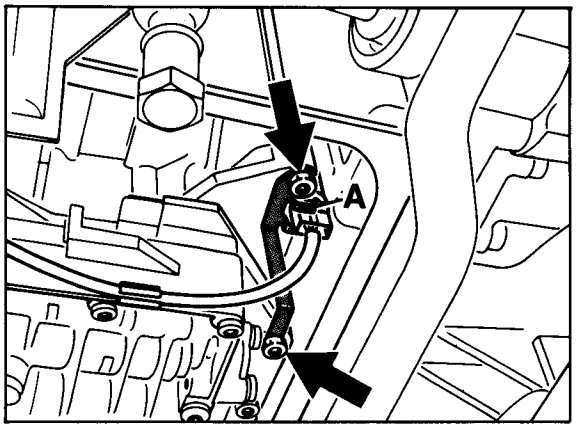

390-38b

A = Connector groove

Installing

Tightening torque:
Holder to control unit = 8 Nm

Installation takes place in reverse order.

Printed in Germany – VI, 1990

Removing and installing the wiring harness for the transmission

Removing

1. Remove the transmission underbody cladding.

2. Remove the position switch (refer to page 37-101).

3. Disconnect the connector from the transmission socket. To do this, turn the bayonet lock to the left and disconnect the connector:

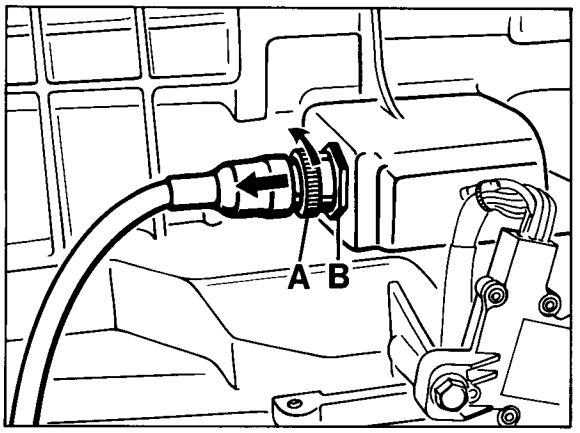

387-38a

A = Bayonet lock
B = Hexagon nut (a/f 30)

4. Unscrew the hexagon nut for the transmission socket with a suitable extension.

5. Remove the hydraulic control unit with wiring harness (also refer to page 38-109).

6. Mark the push-on sleeves for re-installation and pull off from the solenoid valves.

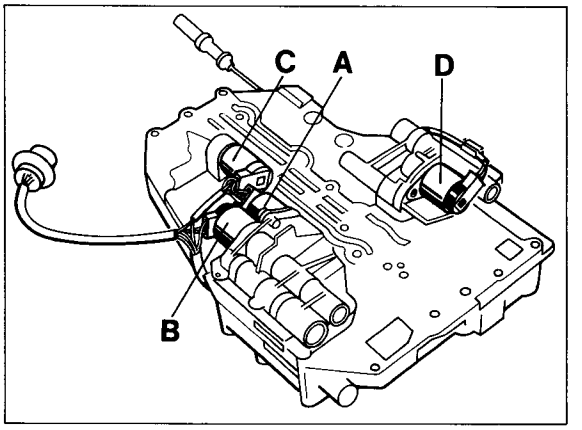

383-38

Installing

1. Push the push-on sleeves for the solenoid valves up to the stop. Pay attention to cable colors.

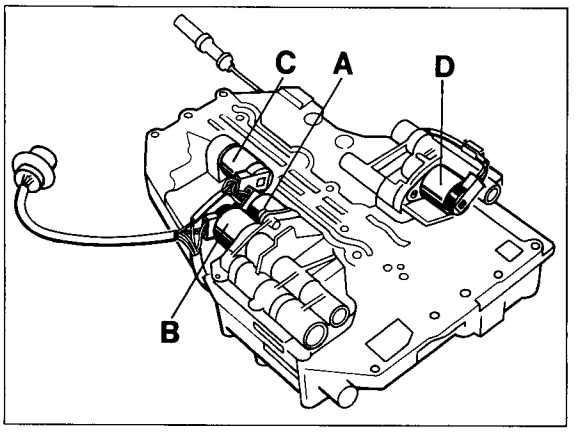

383-38

Printed in Germany – VI, 1990

	Solenoid valves	Cable colors
A	Solenoid valve 1	(grey-violet)
B	Solenoid valve 2	(green-violet)
C	Solenoid valve 3	(red-violet)
D	Pressure regulator	(blue-violet)

2. Route wiring harness and hang in cable clamps.

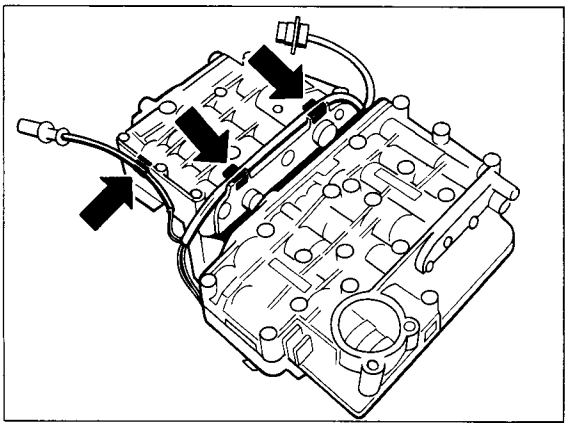

384-38

3. Place hydraulic control unit on a suitable surface (e.g. transmission jack) at installation height.

4. Insert the socket with **new O-ring** so that the flattened side faces upwards. Tighten hexagon nut with **12 Nm (9 ftlb)**.

5. Install hydraulic control unit.

6. Connect wiring harness with transmission socket. To do this, carefully insert the connector in the socket (fits only in one position) and lock by turning the bayonet lock to the right.

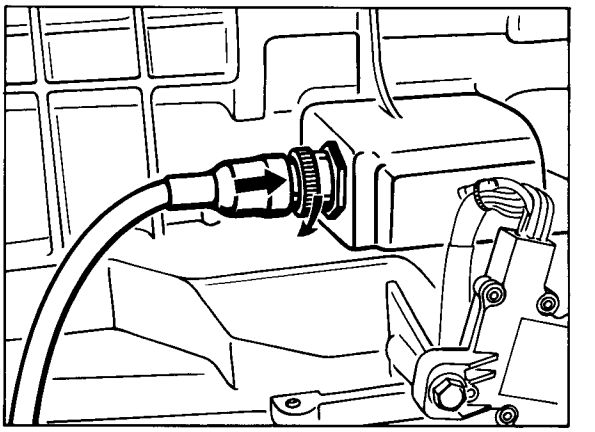

387-38b

7. Install the position switch and readjust.

Printed in Germany – VI, 1990

Removing and installing the hydraulic control unit

Removing

The transmission wiring harness remains on the transmission.

1. Remove the transmission underbody cladding.

2. Drain off ATF fluid.

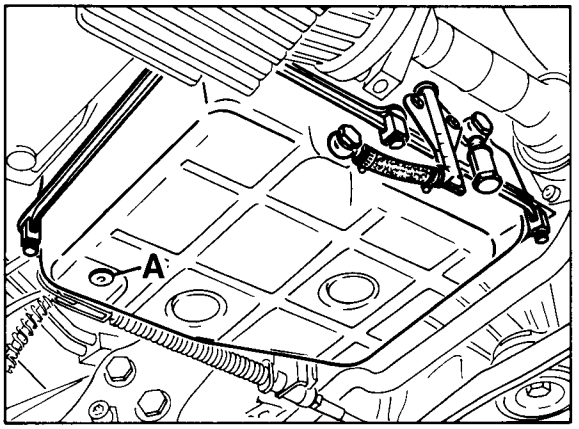

386-38a

A = Drain screw with sealing ring

3. Remove ATF pan. To do this, unscrew hollow screw for oil level pipe and six fixing screws.

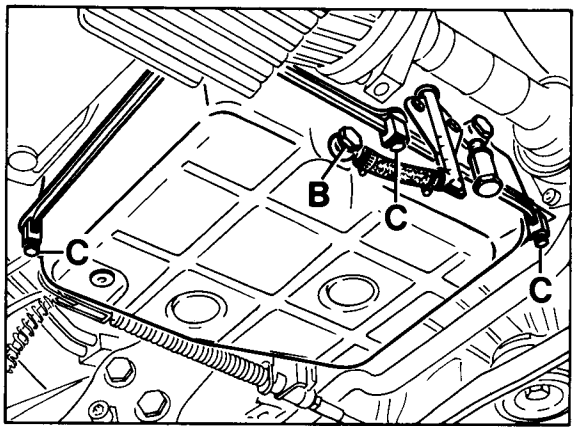

386-38b

B = Hollow screw
C = Fixing screws

4. Remove ATF strainer with **Torx insert T 27**.

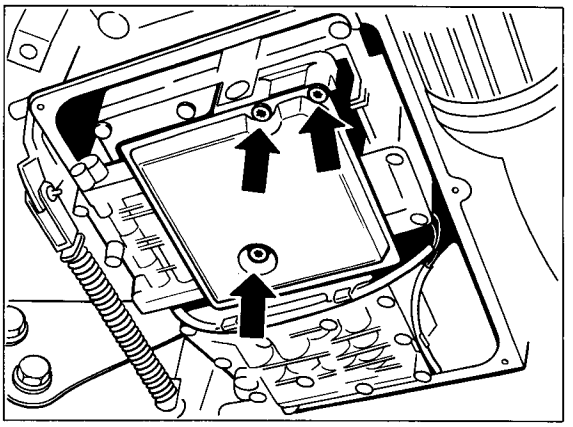

382-38

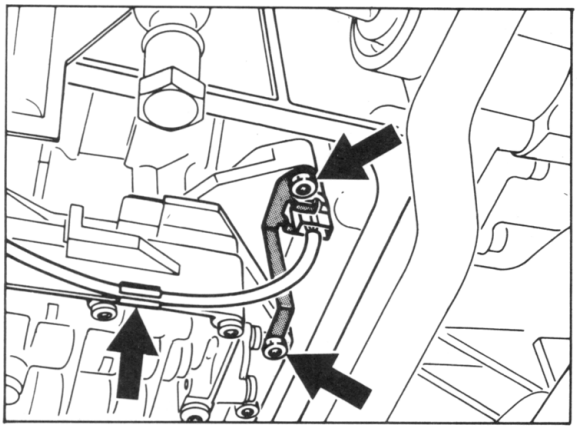

390-38a

6. Unscrew 13 fixing screws (head diameter 12 mm) **with Torx insert T 27** and lower control unit only so far as to guarantee that the wiring harness is not subjected to any tension.
   Place the control unit on a suitable surface (e.g. transmission jack).

Note

Do not allow the control unit to hang from the wiring harness under any circumstances.

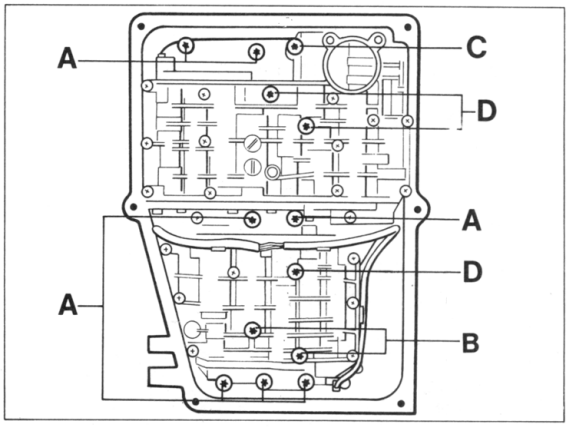

399-38

A = Screw length 80 mm
B = Screw length 65 mm
C = Screw length 105 mm
D = Screw length 60 mm

7. Mark the push-on sleeves for re-installation and pull off from the solenoid valves.

8. Pull the wiring harness out of the holding clamps and remove the control unit.

Installing

Installation takes place in reverse order.

1. Tightening torques:

Control unit to transmission	= 8 Nm (6 ftlb)
ATF strainer to control unit	= 8 Nm (6 ftlb)
ATF pan to transmission	= 6 Nm (4 ftlb)
Drain screw to ATF pan	=40 Nm (29 ftlb)
Hollow screw to ATF pa	=40 Nm (29 ftlb)

Printed in Germany – XV, 1992

2. Push on push-on sleeves for solenoid valves up to the stop. Pay attention to cable colors.

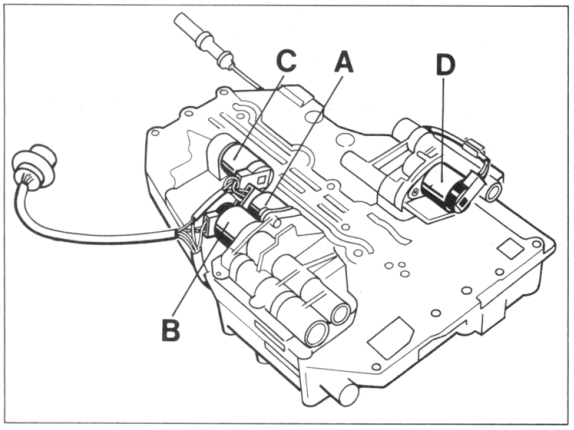

383-38

	Solenoid valves	Cable colors
A	Solenoid valve 1	(grey-violet)
B	Solenoid valve 2	(green-violet)
C	Solenoid valve 3	(red-violet)
D	Pressure regulator	(blue-violet)

3. Mount the control unit so that the pin of the notched disk projects into the recess of the selector slide.

4. Screw in the fixing screws for the control unit and counter slightly. Pay attention to screw lengths.

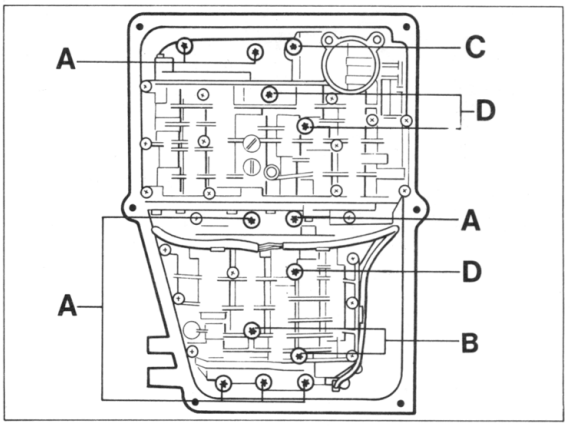

399-38

A = Screw length 80 mm
B = Screw length 65 mm
C = Screw length 115 mm
D = Screw length 60 mm

5. Position control unit. To do this, move notched disk to position 1 (1st gear) and push control unit back until it rests against the notched disk. Tighten fixing screws with **8 Nm** in this position.

Printed in Germany – XV, 1992

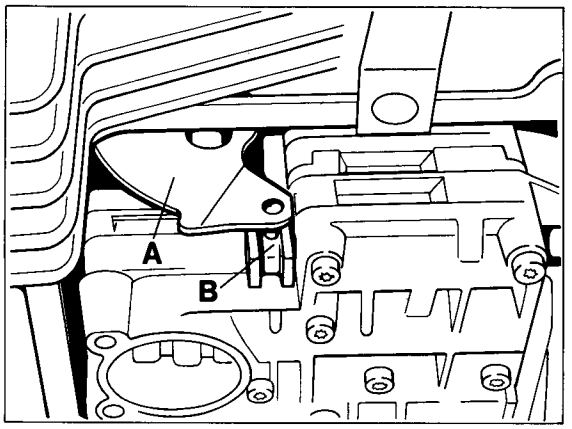

385-38

A = Notched disk
B = Selector slide

6. Insert inductive speed sensor and mount holding plate so that the lugs engage in the connector grooves.

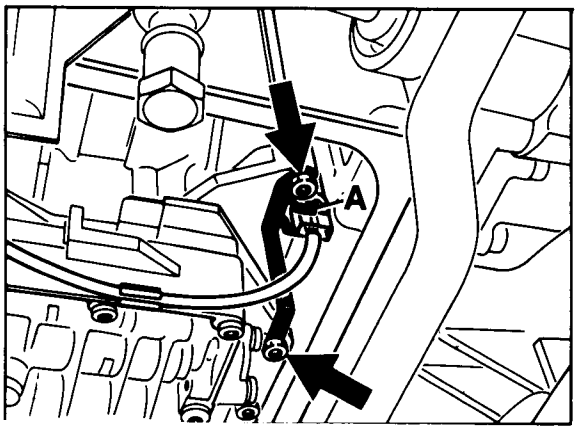

390-38b

7. Fit ATF strainer with O-ring. Tightening torque **8 Nm**.

8. Place two magnets in the beads of the ATF pan, fit seal and secure the pan with the holding brackets so that the short legs press onto the ATF pan.

Note

The two holding brackets with the straight legs must be mounted at the side.

9. Screw in ATF drain screw with new sealing ring. Tightening torque **40 Nm**.

10. Screw in hollow screw for oil level pipe with new sealing rings. Tightening torque **40 Nm**.

11. Fill with ATF fluid
(refer to page 38-103).

Printed in Germany – VI, 1990

Removing and installing solenoid valves

Printed in Germany – VI, 1990

Removing and installing solenoid valves

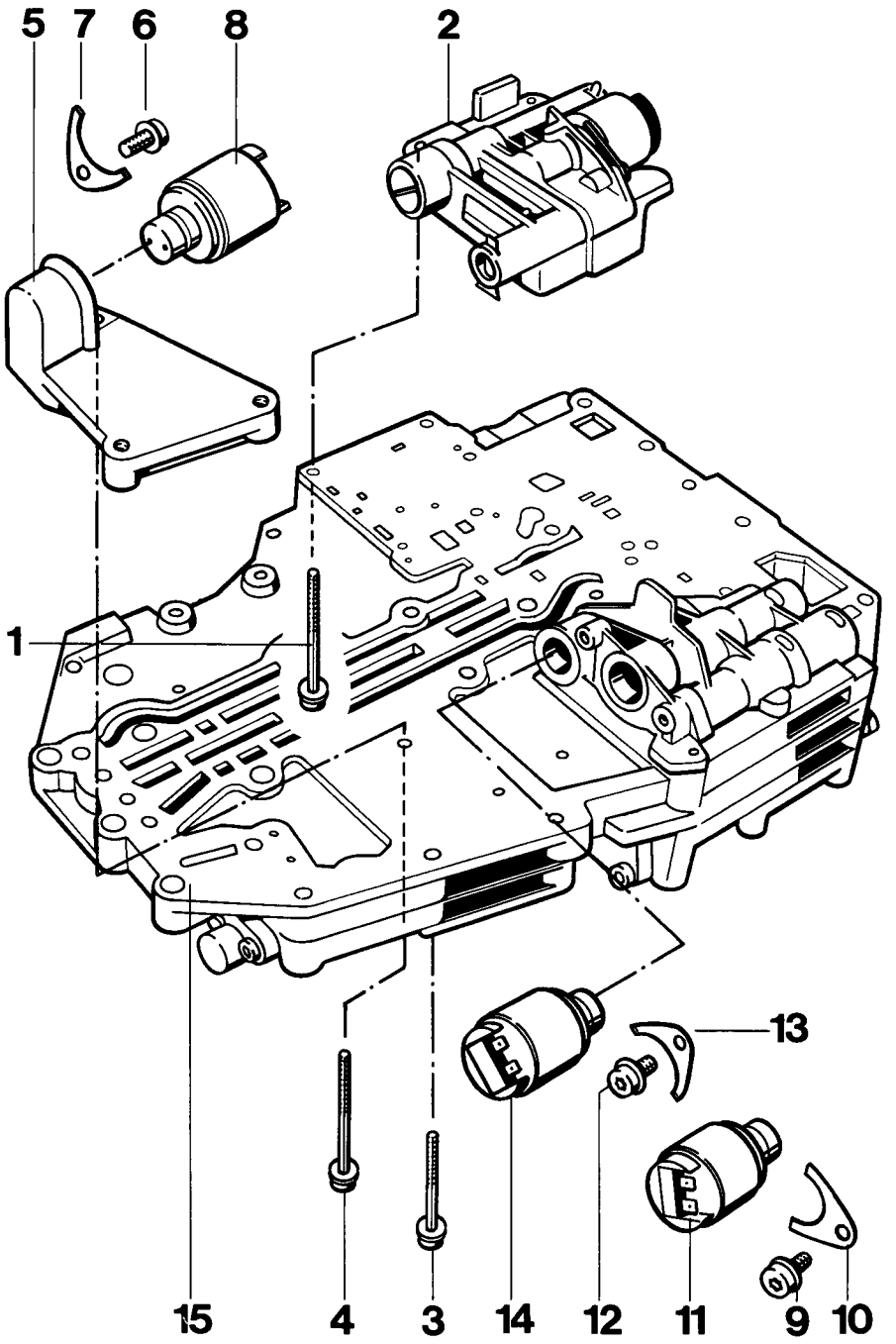

No.	Designation	Qty.	Note: Removal	Installation
1	Fillister head screw	5	Remove with Torx insert T 27	Tighten with 5 Nm (4 ftlb)
2	Housing with pressure regulator	1		Set by the manufacturer, only replace complete
3	Fillister head screw	2	Remove with Torx insert T 27	Tighten with 5 Nm
4	Fillister head screw	1	Remove with Torx insert T 27	Tighten with 5 Nm
5	Holder	1		
6	Fillister head screw	1	Remove with Torx insert T 27	Tighten with 5 Nm
7	Holding plate	1		Fit in correct position, lugs point to holder No. 5
8	Solenoid valve 3	1	Mark for re-installation	Do not confuse with solenoid valves Nos. 11 and 14
9	Fillister head screw	1	Remove with Torx insert T 27	Tighten with 5 Nm
10	Holding plate	1		Fit in correct position, lugs point to housing
11	Solenoid valve 2	1	Mark for re-installation	Do not confuse with solenoid valves Nos. 14 and 8
12	Fillister head screw	1		Tighten with 5 Nm
13	Holding plate			Fit in correct position, lugs point to housing
14	Solenoid valve 1	1	Mark for re-installation	Do not confuse with solenoid valves Nos. 11 and 8
15	Hydraulic control unit	1		

Printed in Germany – VI, 1990

Removing and installing the rotary shaft seal for the ATF pump

Removing

1. Remove transmission and converter.

2. Lever out sealing ring with **VW 681**

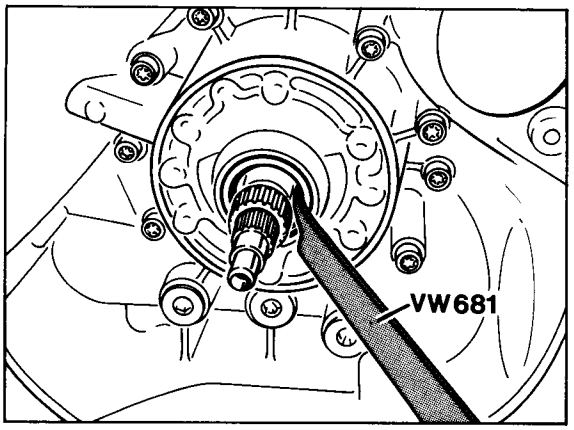

419-38

2. Press in sealing ring with special tool **9328** as far as it will go.

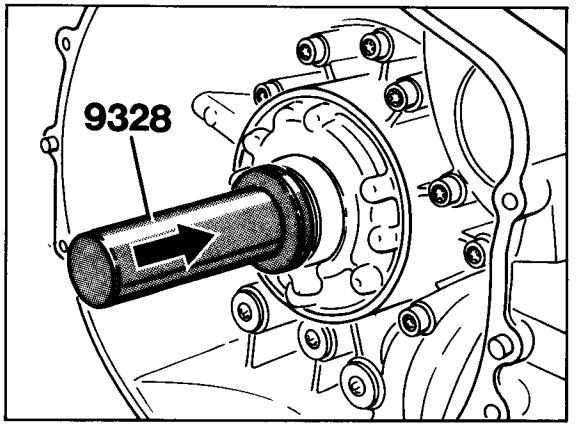

420-38

Installing

Installation takes place in reverse order.

1. Wet sealing lip with ATF.

Printed in Germany – VI, 1990

Removing and installing the ATF pump

Removing

1. Remove transmission.

2. Remove torque converter and rear transmission case.

3. Unscrew fixing screws with **Torx insert T27** and remove pump. To do this, screw in two screws opposite each other and carefully drive out the pump by gentle blows on the screw heads

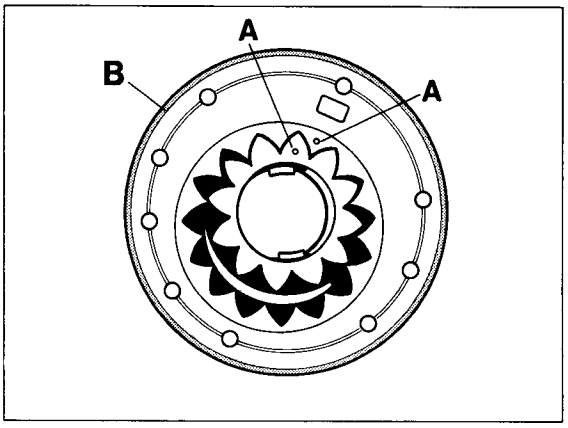

405-38

A = Installation markings
B = O-ring

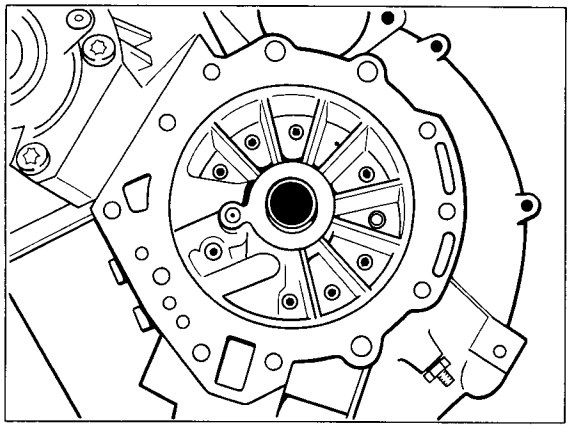

406-38

Installing

1. Check bearing bush for run-in scores or damage. The pump must be replaced if there are signs of damage.

2. Oil both pump wheels with ATF fluid and place in the housing so that both installation markings are visibly facing up.

3. Install pump with new O-ring and centering sleeve. Tighten fixing screws with **10 Nm**.

4. Check pump for easy operation. It must be possible to turn the pump by hand with special tool **9329** without it catching.

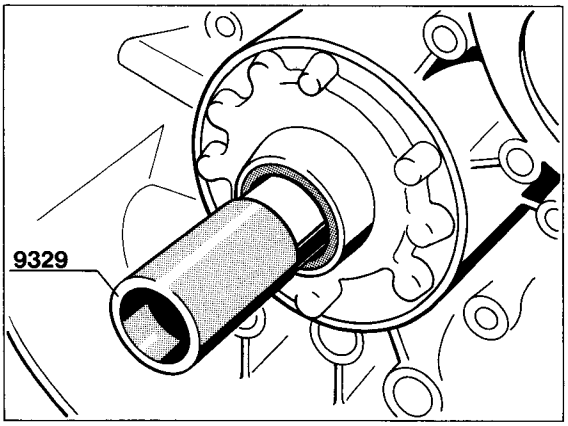

421-38

Printed in Germany – VI, 1990

Dismantling and assembling 4th gear tower

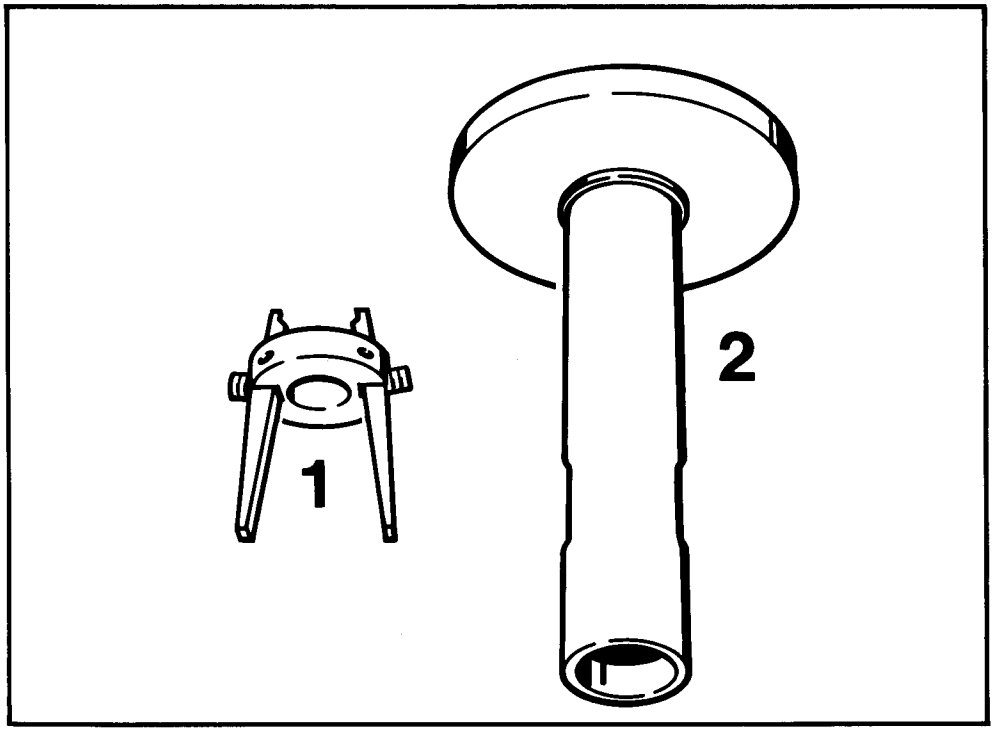

911-38

No.	Designation	Special tool	Order number	Explanation
1	Clamp	9334	000.721.933.40	
2	Assembly support	9314	000.721.931.40	

Printed in Germany – XV, 1992

Dismantling and assembling 4th gear tower

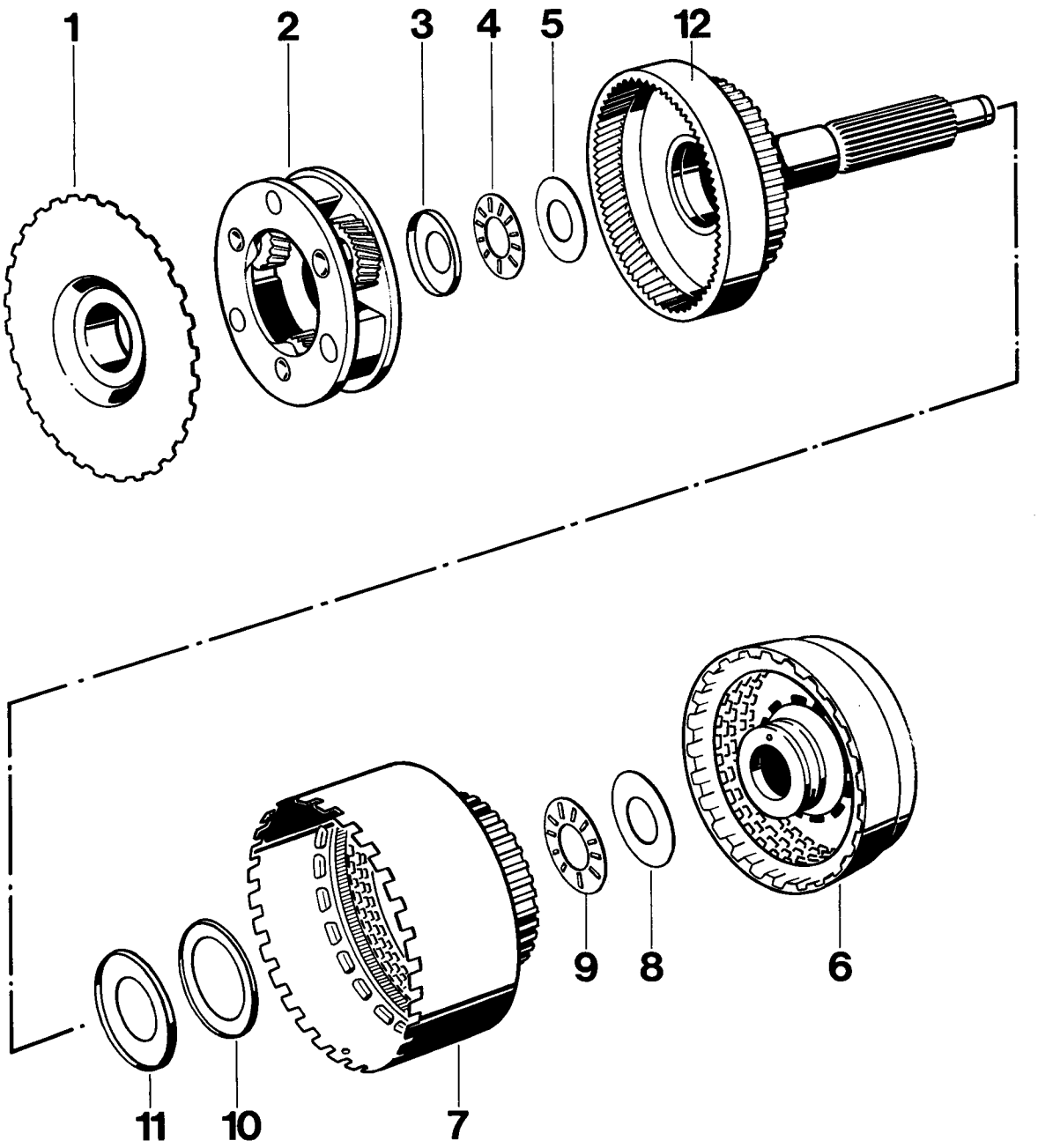

Printed in Germany – XV, 1992

No.	Designation	Qty.	Note: Removal	Installation
1	Sun wheel	1		
2	Planetary set	1		Check for correct seating of the rectangular ring. Engage into hollow gear with a slight rotary motion
3	Angled disc	1		Fit in correct position
4	Axial needle roller cage	1		
5	Thrust washer	1		
6	Brake F	1	For dismantling, refer to page 38 - 137	Make sure rectangular rings are located correctly. Rotate them slightly to move them into installation position
7	Clutch E	1	For dismantling, refer to page 38 - 131	Fit with a rotary motion. The specified position is achieved when cylinder E rests against the copper angle disc
8	Thrust washer	1		
9	Axial needle roller cage	1		
10	Copper angle disc	1		Install in correct position
11	Steel angle disc	1		Install in correct position
12	Output shaft with freewheel	1	For dismantling, refer to page 38 - 127	

Note

Parts No. 1 to 5 should be fitted only after the 4th gear tower has been installed

Printed in Germany – XV, 1992

Dismantling and assembly notes

Dismantling

1. Take Special Tool **9334** off the output shaft, lift the complete pack by the cylinder and place onto Special Tool **9314**.

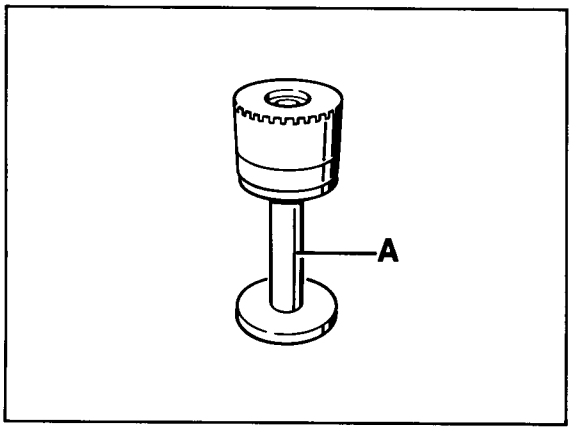

882-38

A - Special Tool **9314**

2. Take off sun wheel and planetary set.

3. Turn over the complete pack on the output shaft and place on a suitable support (e.g. Special Tool **9508/1**).

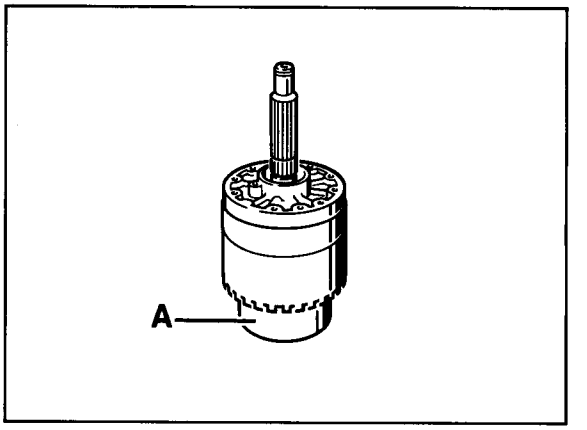

883-38

A = Special Tool **9508/1**

4. Take off cylinder F and E

Assembly

1. Place preassembled output shaft on a suitable support (e.g. **9508/1**).

2. Put steel and copper angle disc in place and fit cylinder E with a rotary motion.

Note

The teeth of the end disc and of the freewheel outer ring must engage with each in such a manner that cylinder E rests on the copper angle disc.

Printed in Germany – XV, 1992

4. If the freewheel has been fitted correctly, cylinder E must be free to rotate clockwise with the output shaft being held, but it must lock when an attempt is made to rotate it counterclockwise.

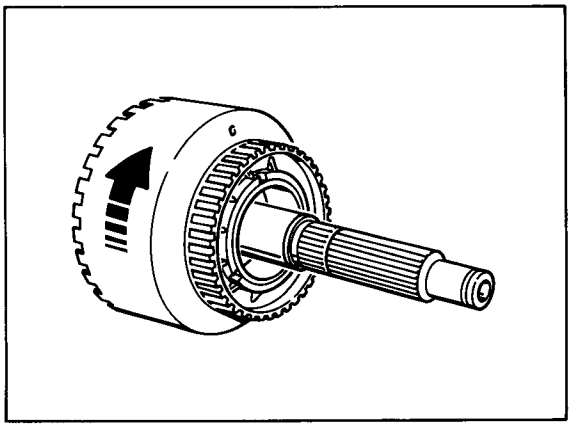

880-38

5. Fit axial needle roller cage and thrust washer. Place cylinder F onto cylinder E with a rotary motion until it is in assembly position.

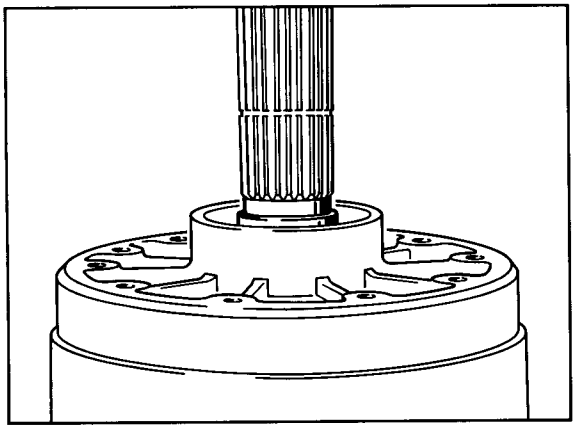

884-38

6. To prevent the preassembled pack from separating, allow **Special Tool 9334** to engage into the groove of the round seal.

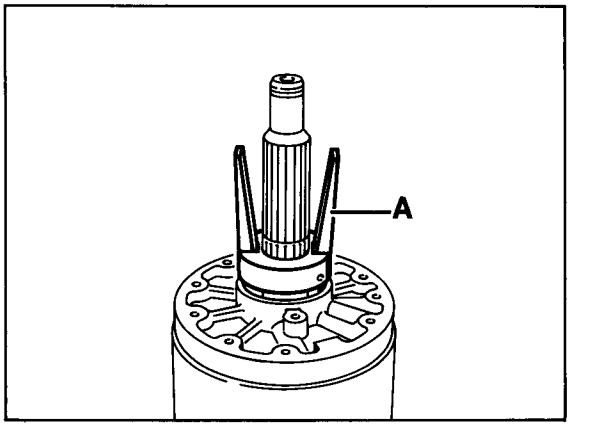

885-37

A – Special Tool **9334**

Note

The teeth of end disc and freewheel outer ring engage only over a length of approx. 3 mm.

Printed in Germany – XV, 1992

Dismantling and assembling output shaft and freewheel

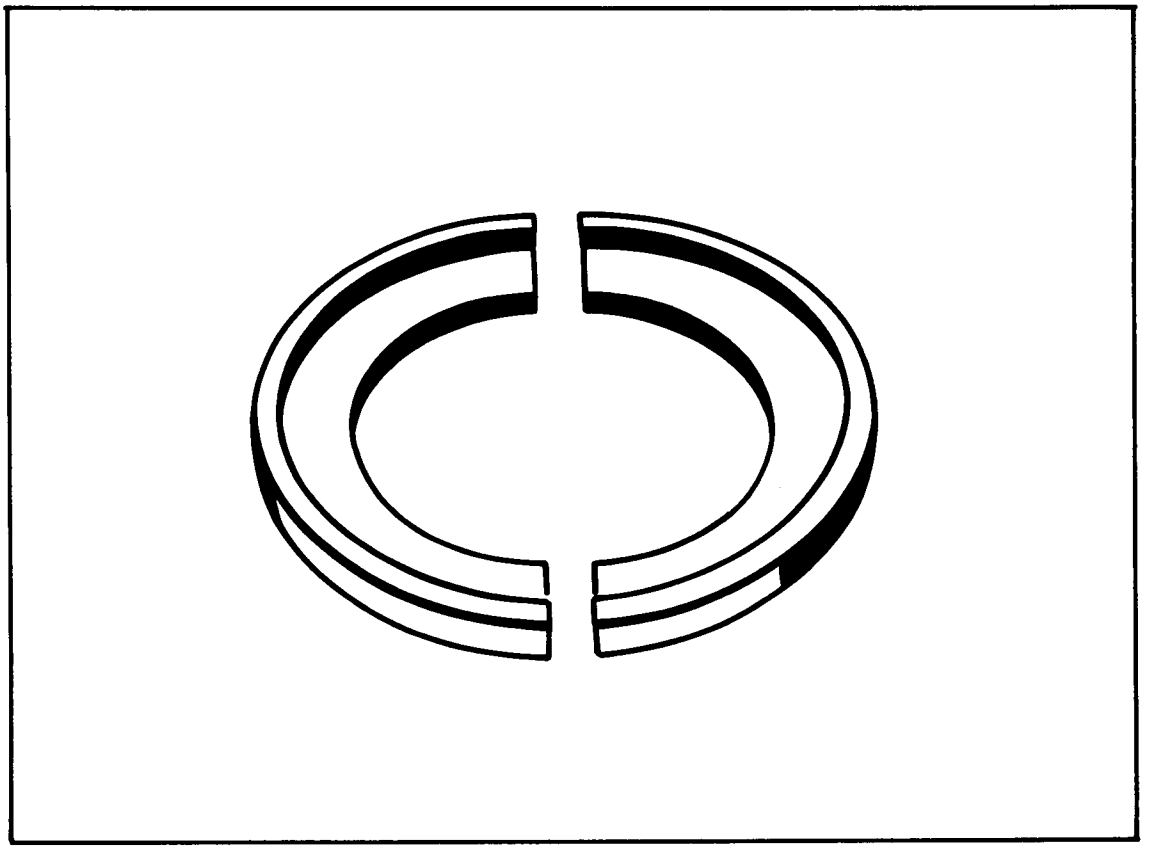

No.	Designation	Special tool	Order number	Explanation
	Assembly ring	9336	000.721.933.60	

Printed in Germany – XV, 1992

Dismantling and assembling output shaft and freewheel

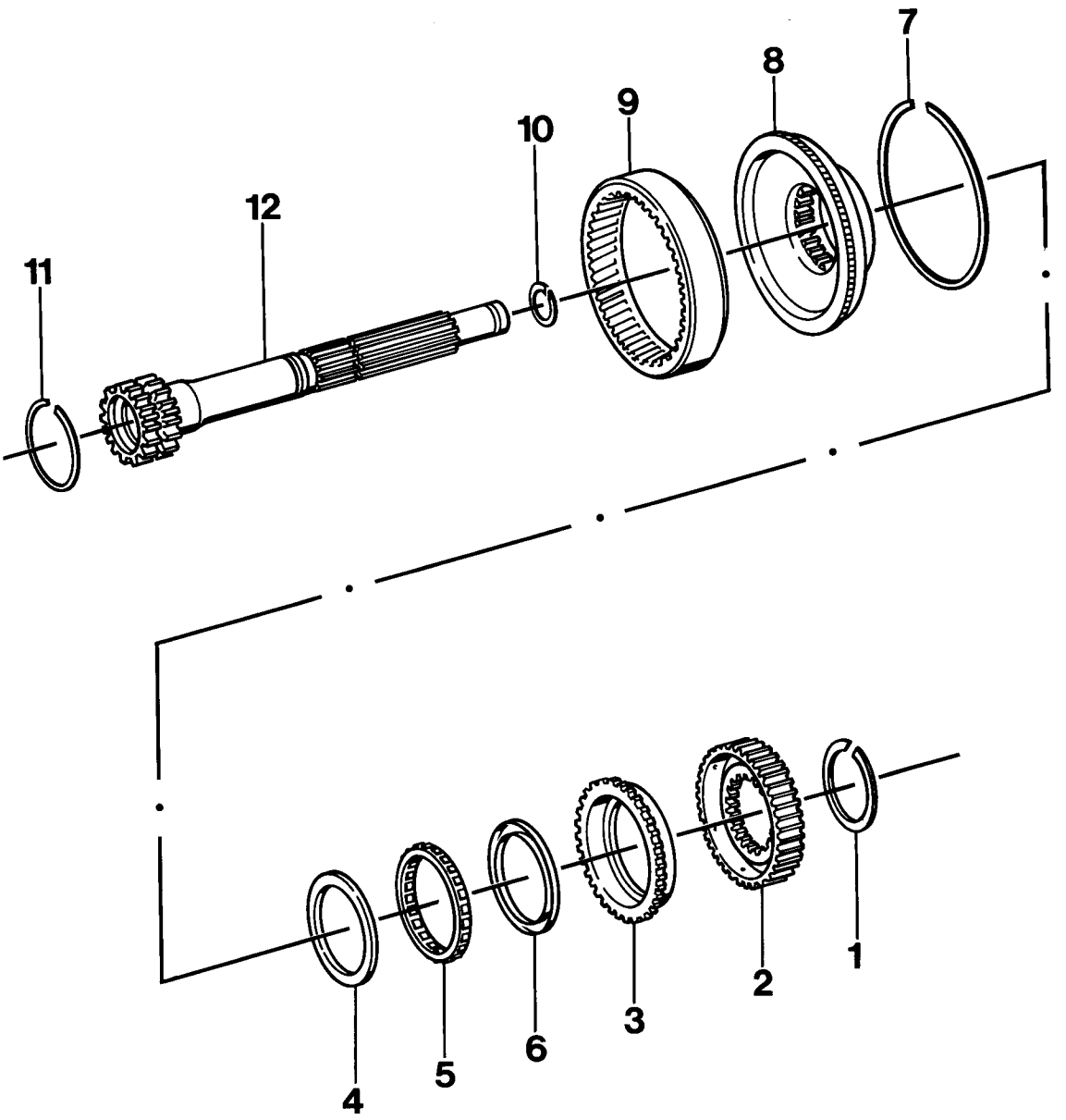

902-38

Printed in Germany – XV, 1992

No.	Designation	Qty.	Note: Removal	Installation
1	Snap ring	1	Remove with suitable pliers and screwdriver	Install with suitable pliers (e.g. VW 161a)
2	Disc carrier	1		
3	Freewheel outer ring	1	Rotate to lift off along with freewheel cage	Rotate clockwise to push onto inner ring along with freewheel cage
4	Thrust washer	1		
5	Freewheel cage	1	Mark installation position for reassembly. Press carefully out of outer ring	Use Special Tool **9336** to place into outer ring
6	Thrust washer	1		
7	Snap ring	1		
8	Freewheel inner ring	1		
9	Hollow gear	1		
10	Rectangular ring	1		Replace
11	Snap ring	1		
12	Output shaft	1		

Printed in Germany – XV, 1992

Dismantling and assembly notes

Dismantling

1. Remove snap ring (No. 1) and take off freewheel assembly along with disc carrier and hollow gear.

Assembly

1. Place freewheel cage onto outer ring and align.

2. Use Special Tool **9336** to compress freewheel cage and to push it into the outer ring.

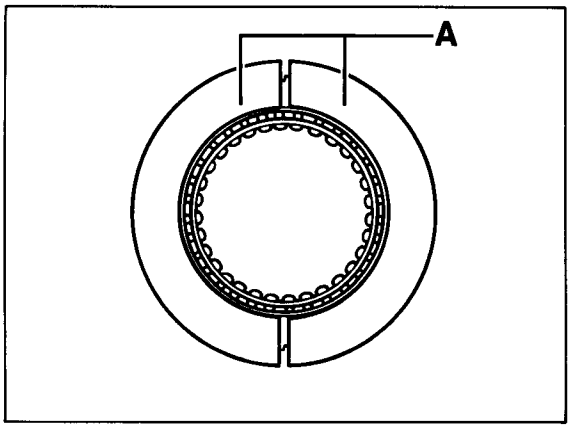

886-38

A - Special Tool **9336**

3. Push freewheel outer ring onto inner ring, following a clockwise rotary motion.

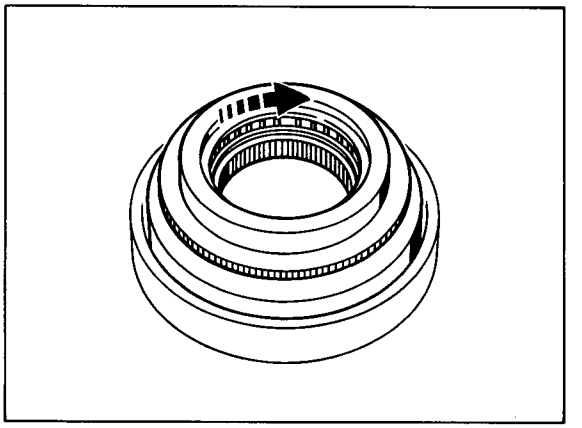

887-38

4. Determine gap between freewheel inner ring and freewheel outer ring.
   A minimum gap of 0.1 mm must remain.

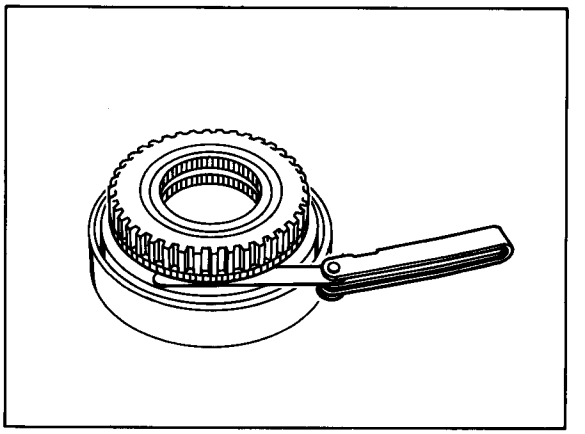

888-38

Printed in Germany – XV, 1992

Dismantling and assembling clutch E

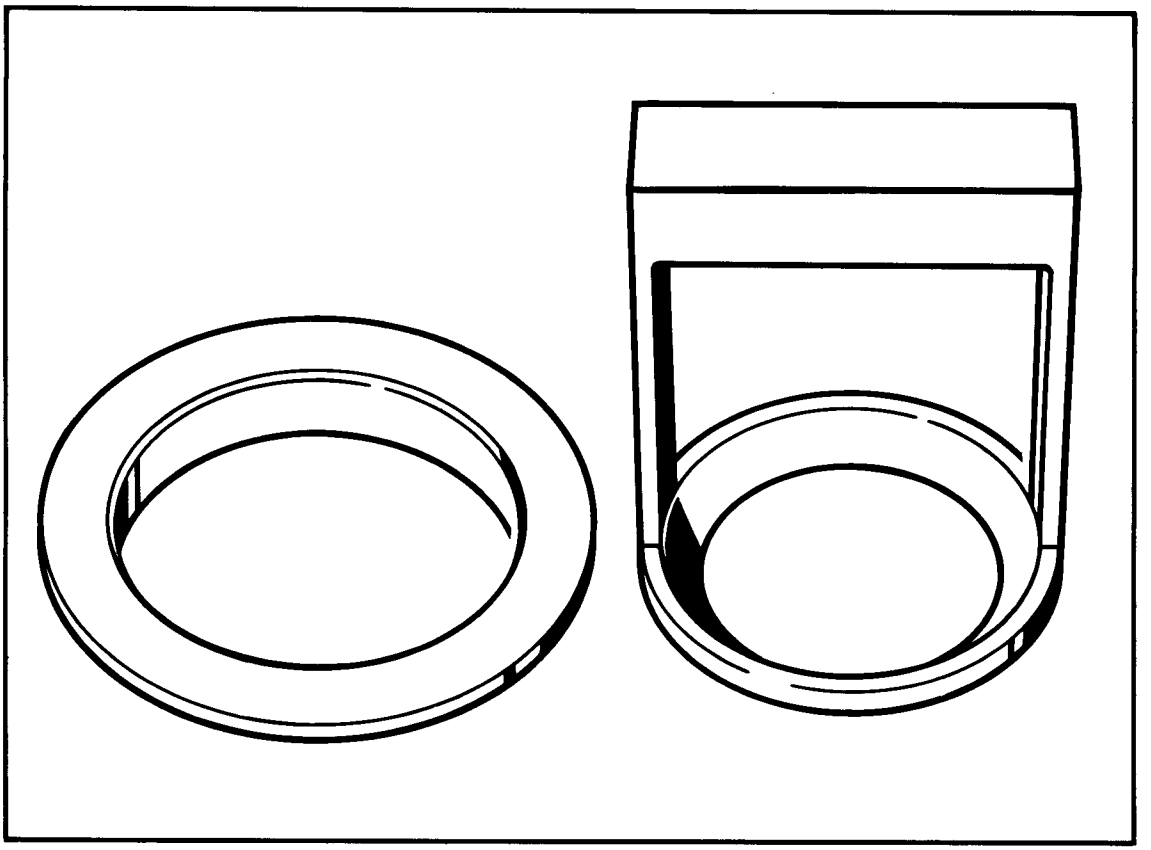

No.	Designation	Special tool	Order number	Explanation
	Assembly tool	9335	000.721.933.50	

Printed in Germany – XV, 1992

Dismantling and assembling clutch E

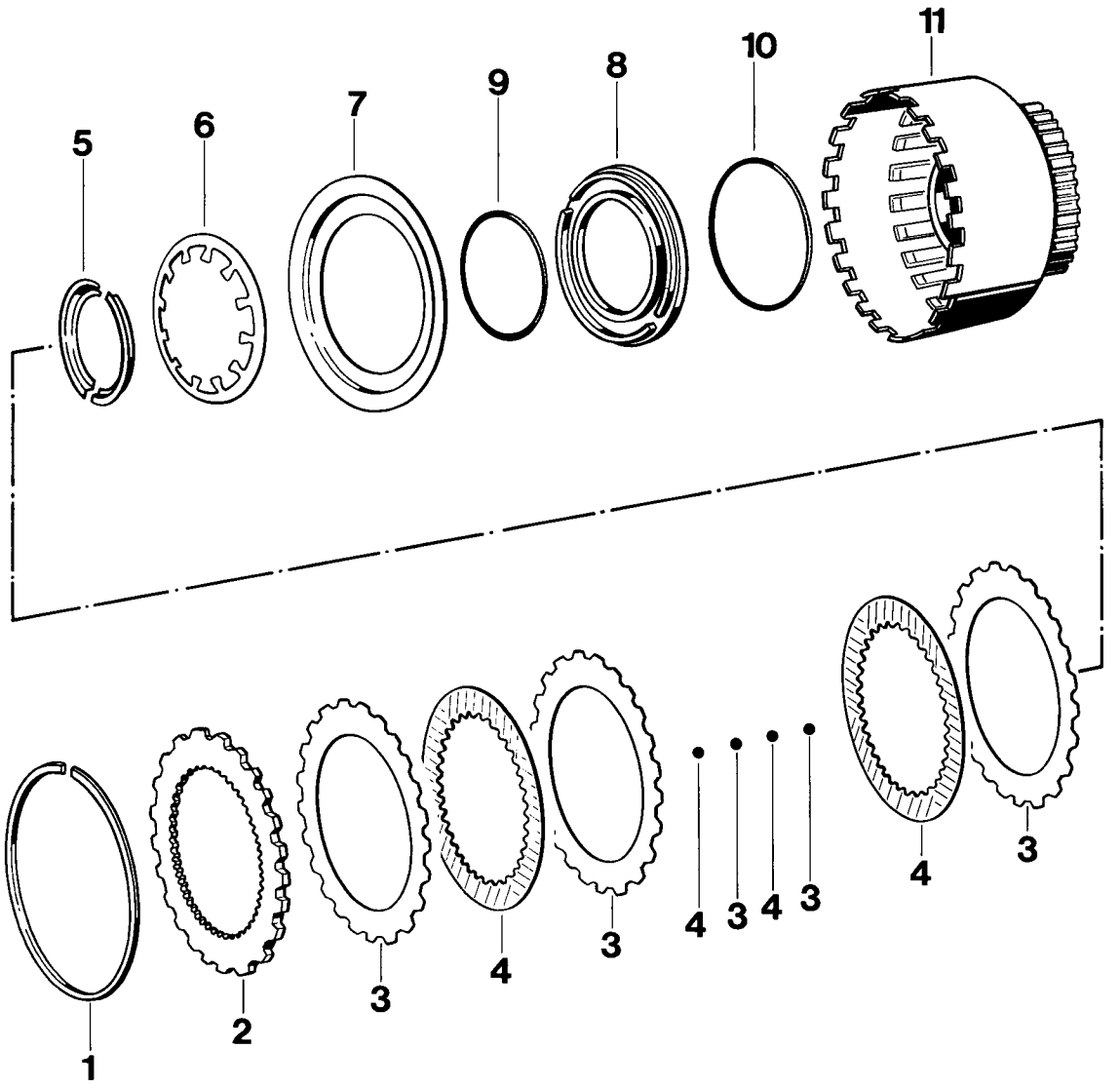

Printed in Germany – XV, 1992

No.	Designation	Qty.	Note: Removal	Installation
1	Snap ring	1		
2	End disc (with internal teeth)	1		Do not confuse with end disc of brake F
3	Outer disc (1.5 mm thick)	5		Do not confuse with outer discs of brake F
4	Inner disc	4		
5	Retainer ring	1	Remove with Special Tool **9335**, using a press	Install with Special Tool **9335**, using a press
6	Cup spring	1		Convex side faces retainer ring
7	Thrust cup	1		Place into position with convex side facing down
8	Piston	1	To remove, apply compressed air across oil feed bore	Grease round seals (with Vaseline) and press piston carefully in place, making sure it does not bind
9	Round seal	1		Replace
10	Round seal	1		Replace
11	Cylinder	1		

Printed in Germany – XV, 1992

Dismantling and assembly notes

Dismantling

1. Remove retainer ring with Special Tool **9335** and a bar magnet, using a press.

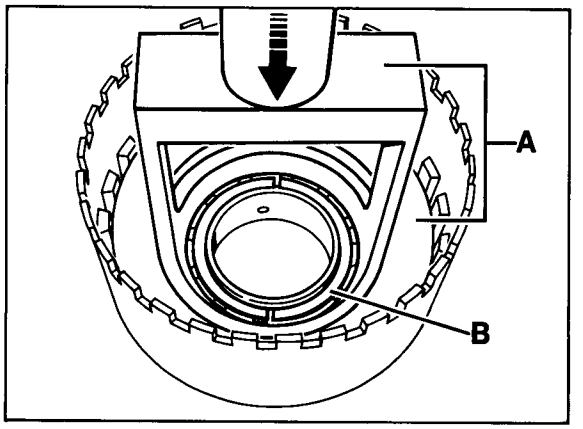

870-38

A - Special Tool **9335**
B - Split retainer ring

2. Remove piston by applying compressed air across the oil feed bore.
   Use a air gun fitted with a sealing sleeve.

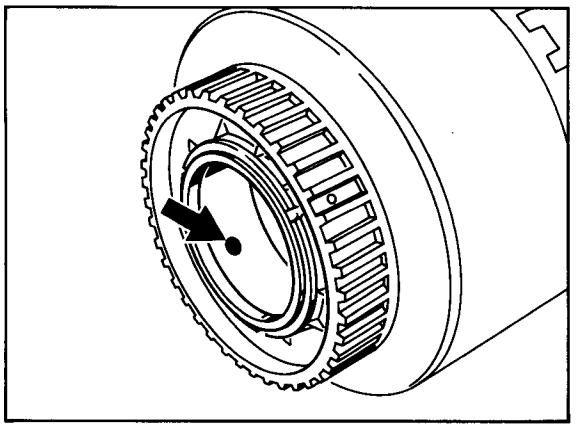

871-38

Assembly

1. Fit split retainer ring with Special Tool **9335** and a press, observing the correct position.

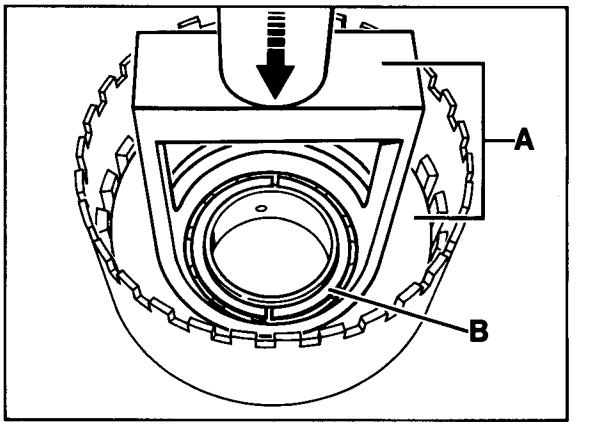

870-38

2. Coat discs with ATF fluid.

Measure air gap

Standard: 1.16...2.74 mm

1. Use a screwdriver to press snap ring upwards along its entire circumference and measure air gap with a feeler gauge.
   If the wear limit has been reached, the entire disc pack must be replaced.

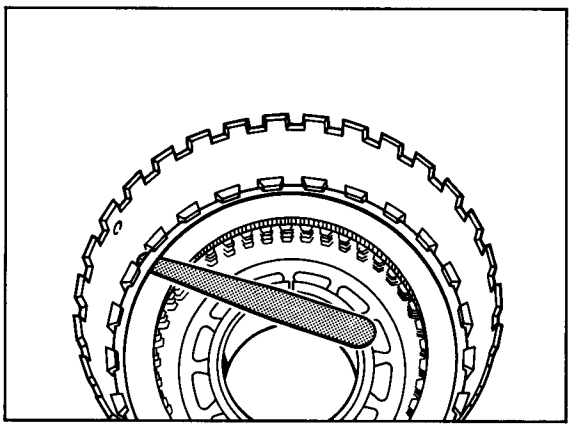

918-38

Printed in Germany – XV, 1992

Dismantling and assembling brake F

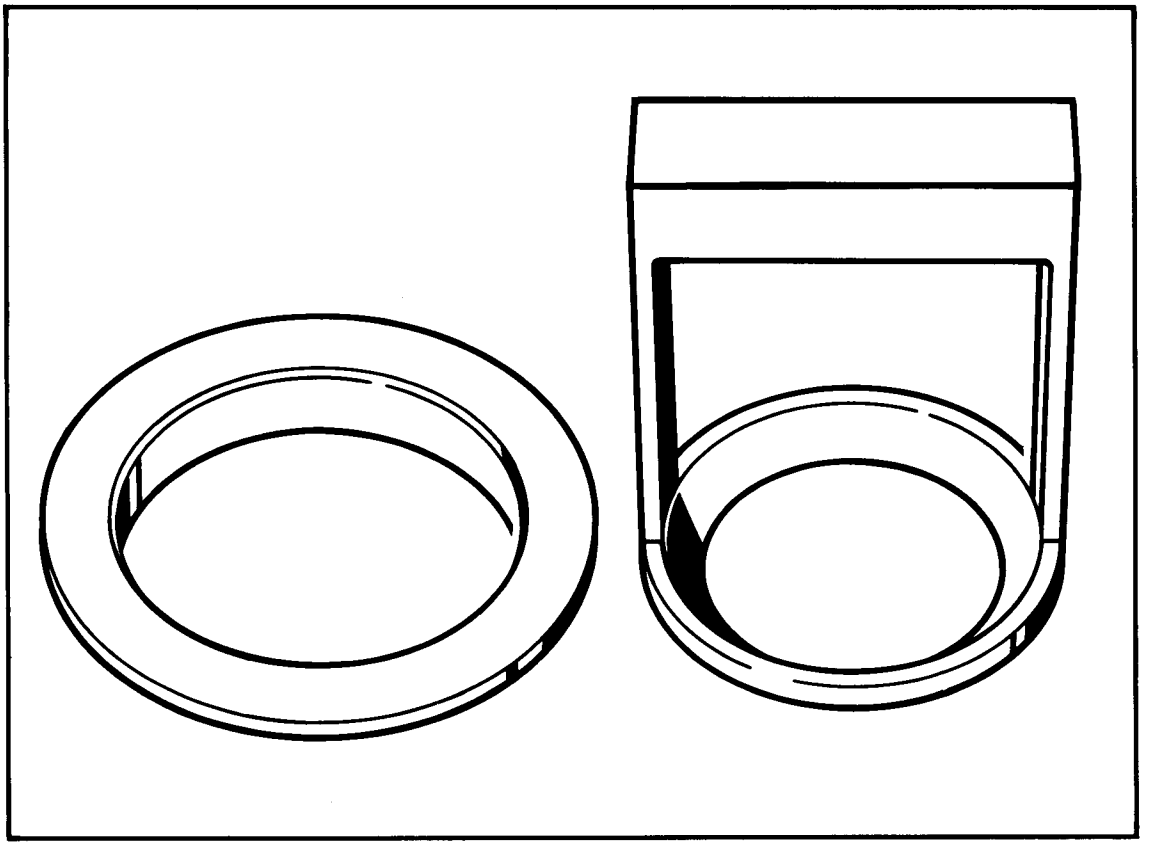

No.	Designation	Special tool	Order number	Explanation
	Assembly tool	9335	000.721.933.50	

Printed in Germany – XV, 1992

Dismantling and assembling brake F

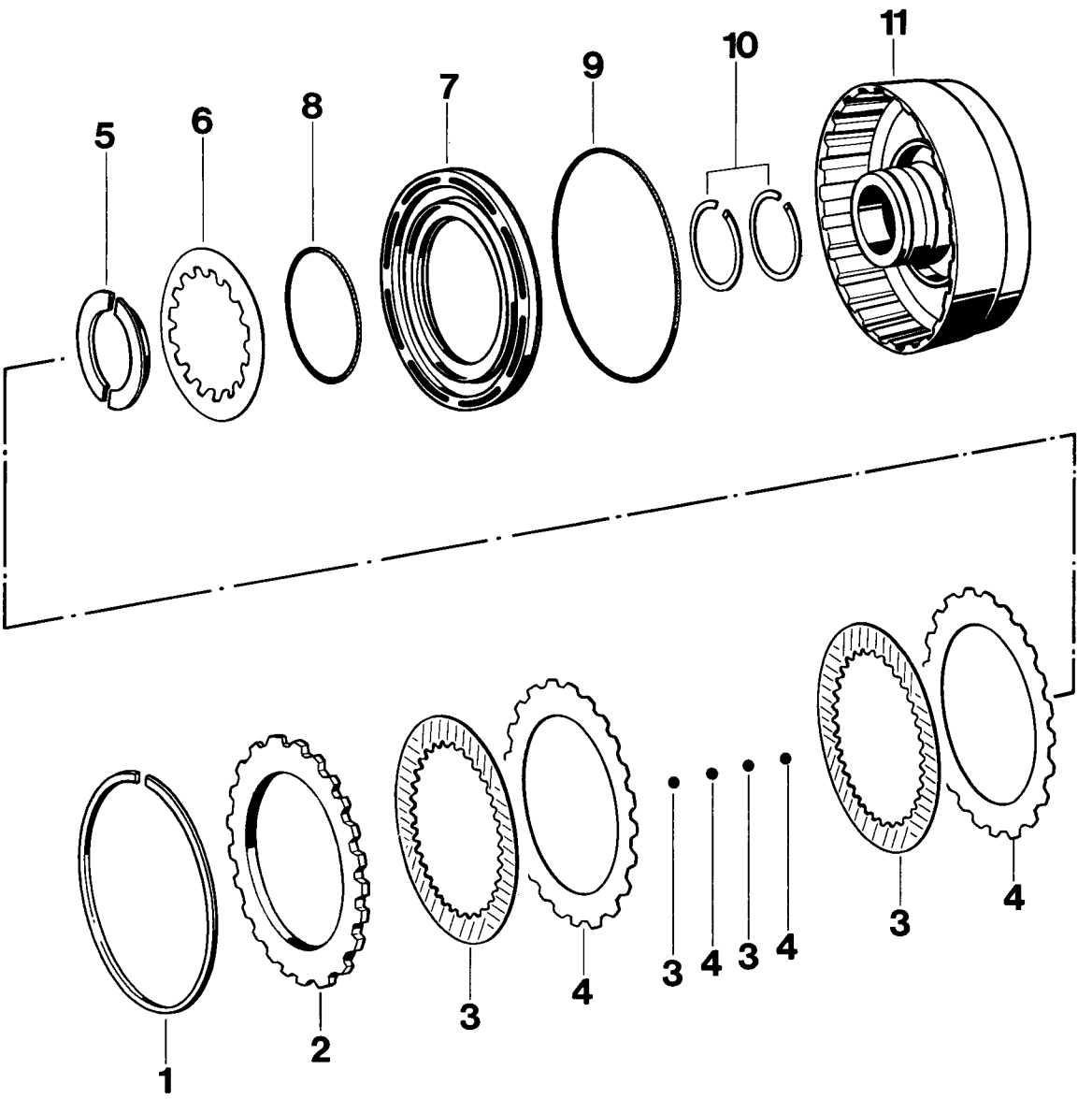

No.	Designation	Qty.	Note: Removal	Installation
1	Snap ring	1		
2	End disc (without internal teeth)	1		Do not confuse with end disc of clutch E
3	Inner disc	4		
4	Outer disc (2.1 mm thick)	4		Do not confuse with outer disc of clutch E
5	Ring (split)	1	Remove with Special Tool **9335** and a press	Install with Special Tool **9335** and a press, observing correct position. Stepped side faces inside.
6	Cup spring	1		Lugs face inside
7	Piston	1	Press out of cylinder from outside, using a suitable tool	Grease round seals (with vaseline) and press carefully into cylinder, making sure the piston does not bind.
8	Sealing ring	1		Replace To avoid damage, expand ring slightly and fit at once
9	Round seal	1		Replace
10	Rectangular ring	2		Hooked ends must engage into each other
11	Cylinder	1		

Dismantling and assembly notes

Dismantling

1. Remove split ring with Special Tool **9335** and a bar magnet, using a press.

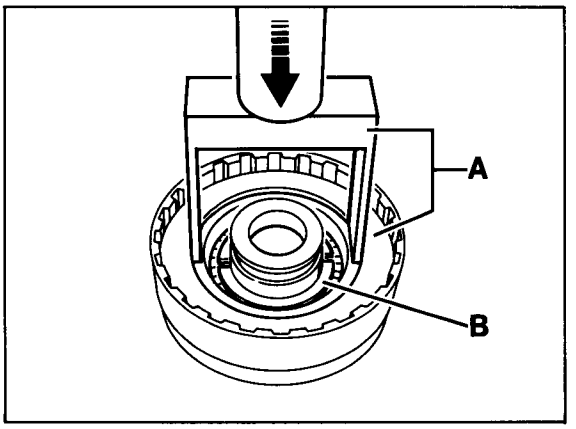

863-38

A - Special Tool **9335**
B - Split ring

2. Using a suitable tool, press piston out of cylinder from the outside.

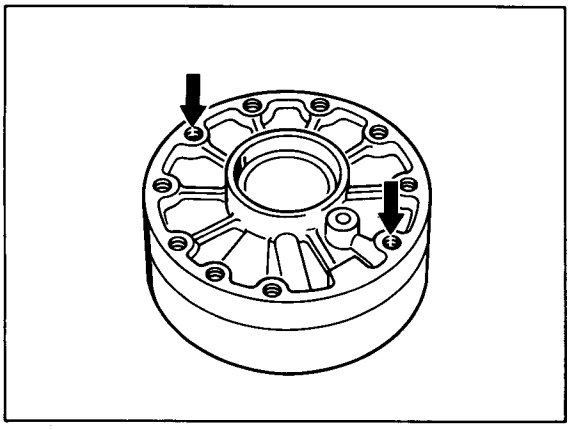

864-38

Assembly

1. Install split ring with Special Tool **9335** and a press.

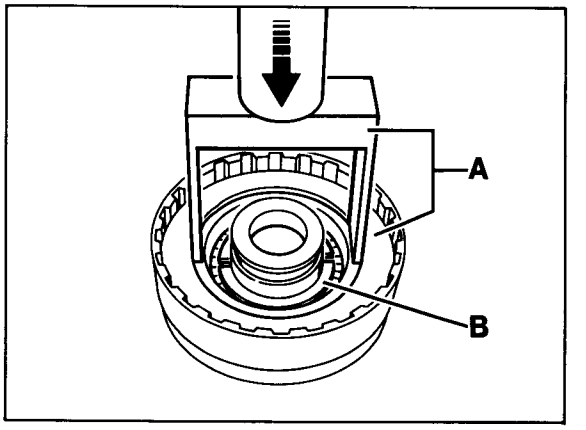

863-38

Printed in Germany – XV, 1992

Measure air gap

Standard: 1.45...2.75 mm

1. Use a screwdriver to press snap ring upwards along its entire circumference and measure air gap with a feeler gauge.
   If the wear limit has been reached, the complete disc pack must be replaced.

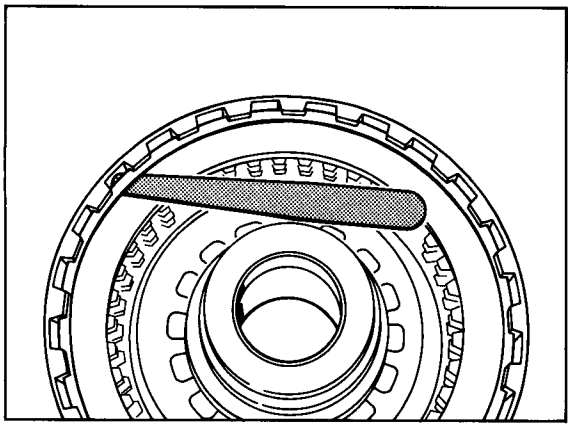

919-38

Printed in Germany – XV, 1992

Dismantling and assembling brake pack CD with spider shaft

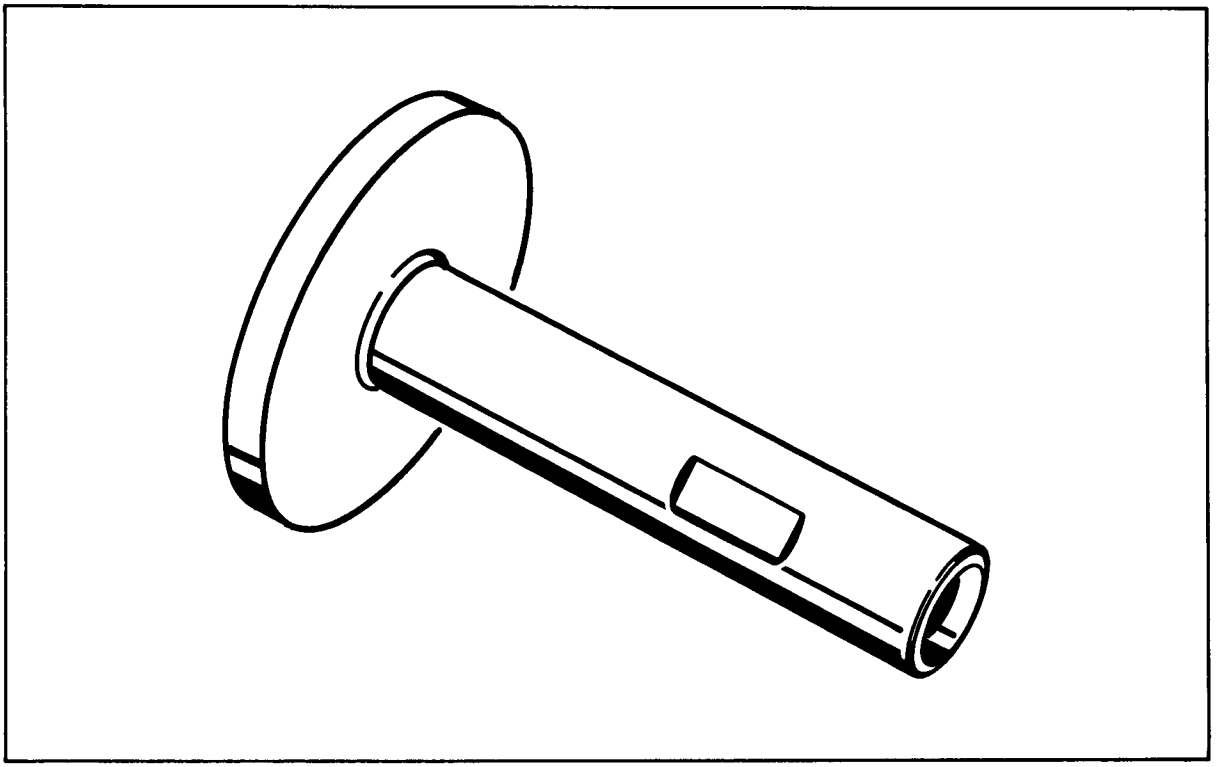

899-38

No.	Designation	Special tool	Order number	Explanation
	Assembly support	9314	000.721.931.40	

Printed in Germany – XV, 1992

Dismantling and assembling brake pack CD with spider shaft

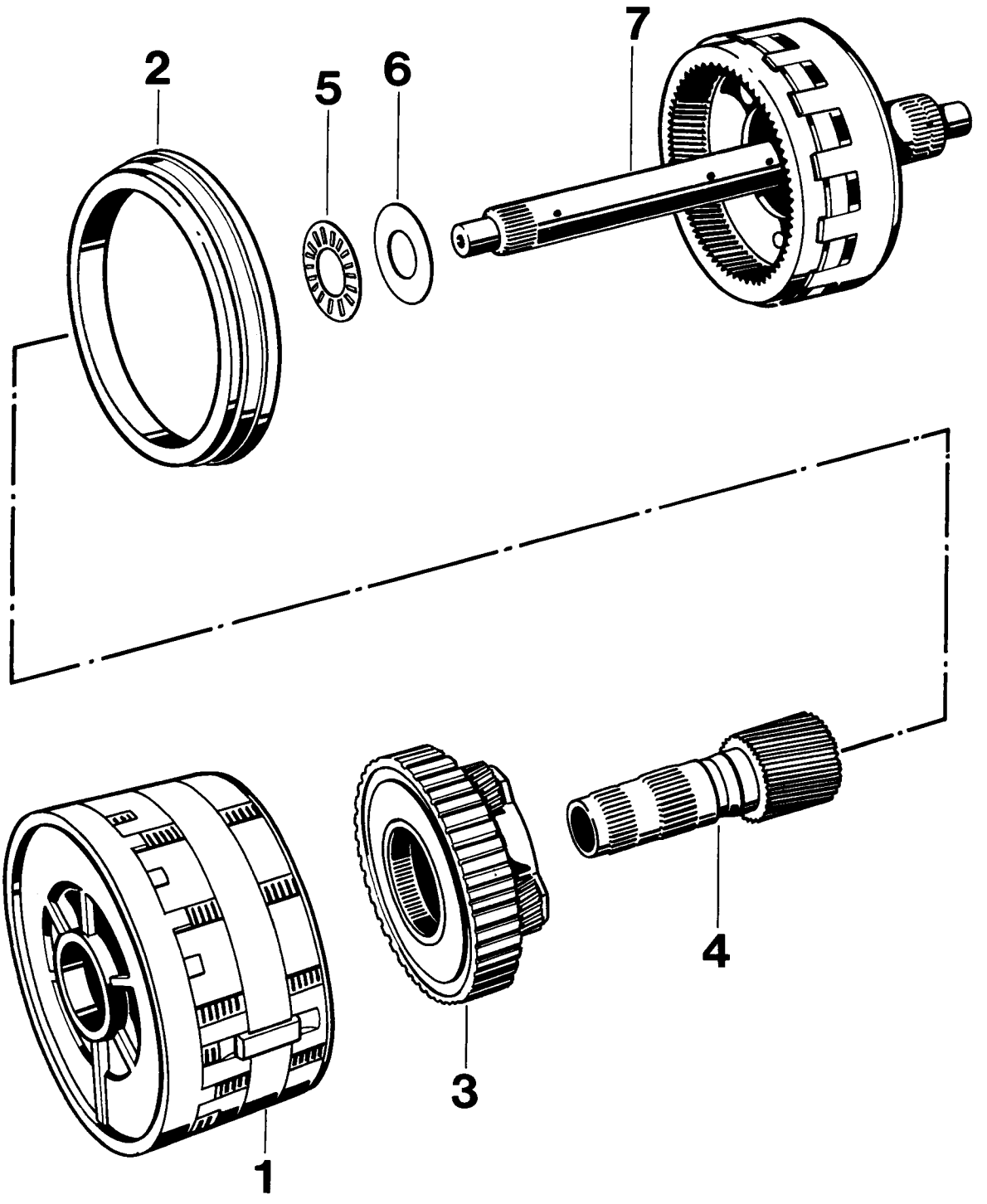

Printed in Germany – XV, 1992

No.	Designation	Qty.	Note: Removal	Installation
1	Cylinder CD	1	Remove with centering plate and support ring. For dismantling, refer to page 38 - 152	
2	Support ring	1		
3	Planetary set	1		Refer to "Dismantling and assembling brake D" (refer to page 38 - 152)
4	Sun shaft	1		Hook ends of rectangular rings into each other
5	Axial needle roller cage	1		
6	Thrust washer	1		
7	Spider shaft (with hollow gear and intermediate shaft)	1	For dismantling, refer to page 38 - 147	

Note

To dismantle, place spider shaft with cylinder CD onto Special Tool **9314**.

Dismantling and assembling spider shaft

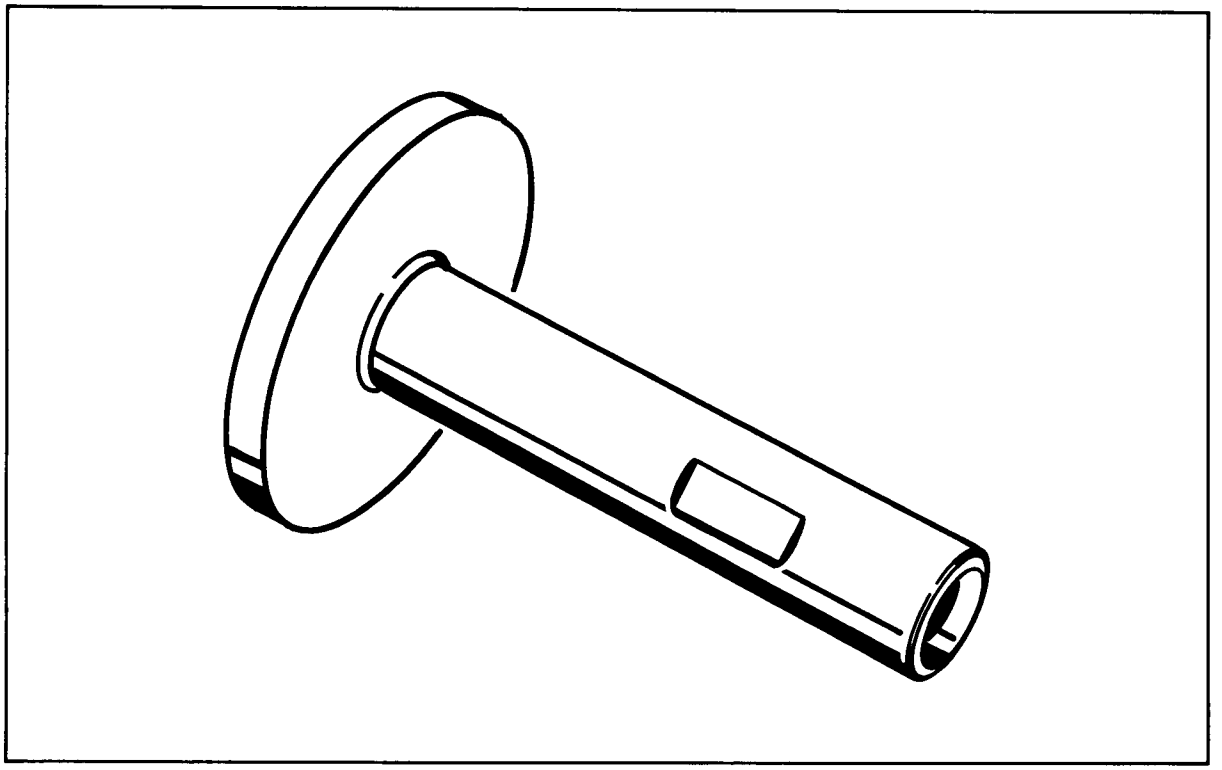

899-38

No.	Designation	Special tool	Order number	Explanation
	Assembly support	9314	000.721.931.40	

Printed in Germany – XV, 1992

Dismantling and assembling spider shaft

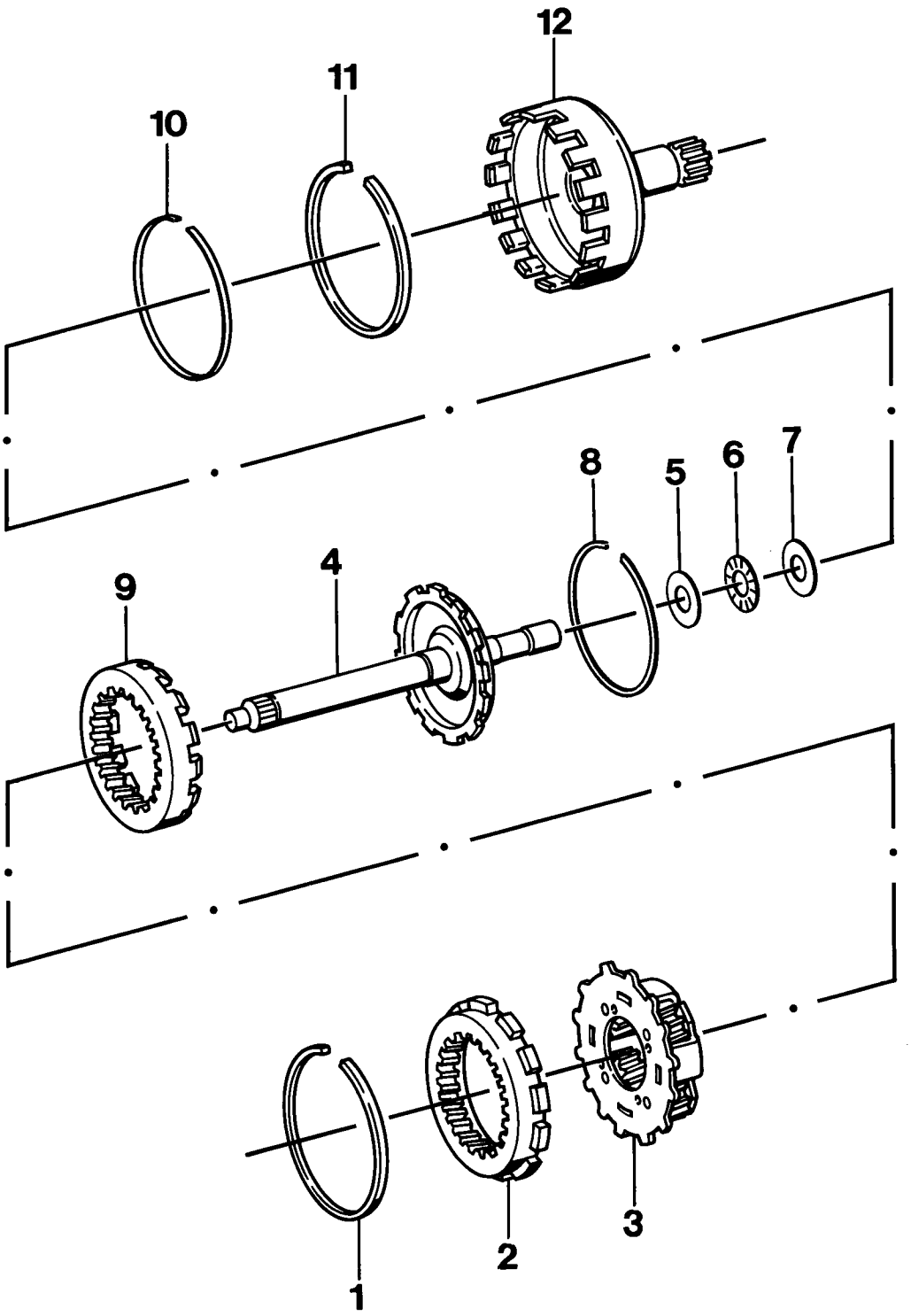

Printed in Germany – XV, 1992

No.	Designation	Qty.	Note: Removal	Note: Installation
1	Snap ring	1		
2	Front hollow gear	1		
3	Planetary set	1		Do not allow to bind, rotate intermediate shaft to place unit in assembly position
4	Intermediate shaft	1		Fit rear hollow gear and place both into spider shaft
5	Thrust washer	1		
6	Axial needle roller cage	1		
7	Thrust washer	1		
8	Snap ring	1		
9	Rear hollow gear	1		
10	Spacer ring	1		
11	Snap ring	1		
12	Spider shaft	1		

Note

To dismantle and assemble the spider shaft, place it onto Special Tool **9314**.

Printed in Germany – XV, 1992

Dismantling and assembling brake C, C' and D

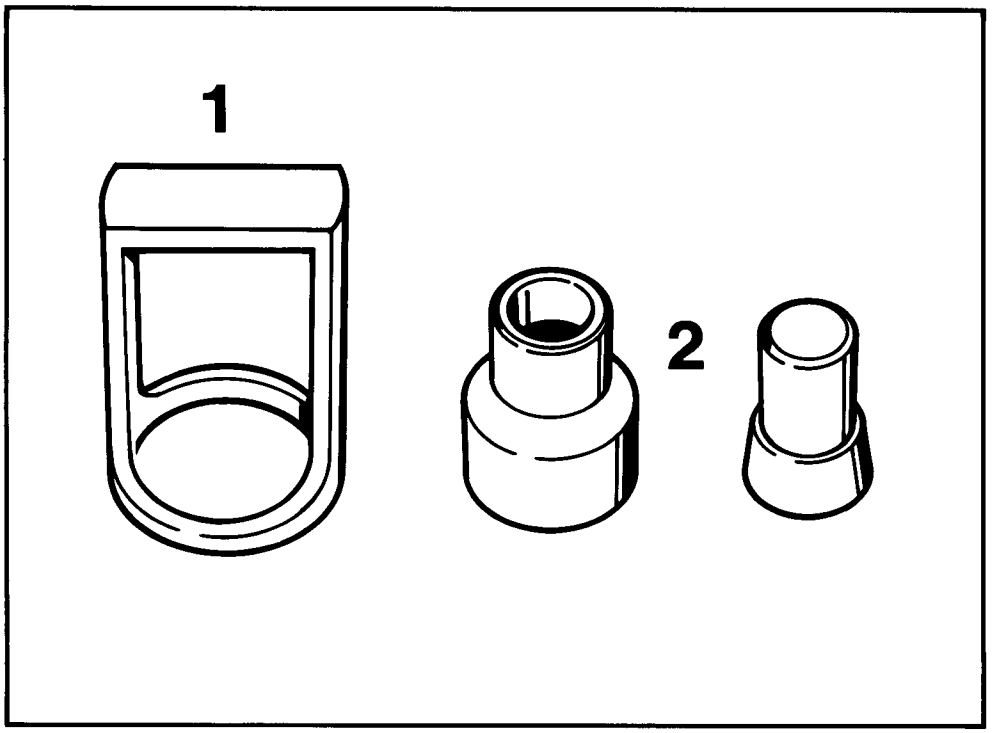

910 - 38

No.	Designation	Special tool	Order number	Explanation
1	Thrust piece	9332	000.721.933.20	
2	Assembly sleeve	9333	000.721.933.30	

Printed in Germany – XV, 1992

Dismantling and assembling brake C, C' and D

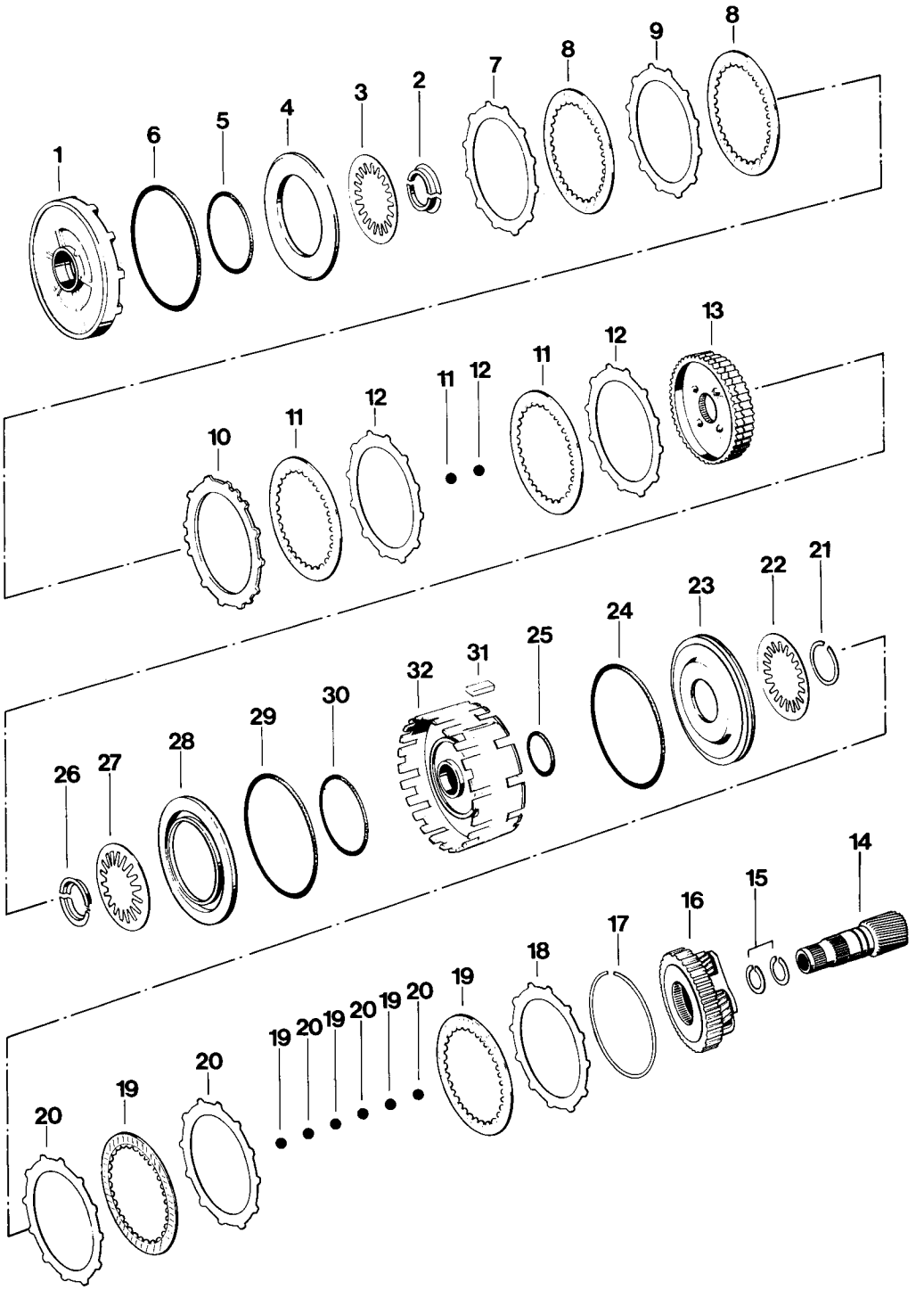

916-38

Printed in Germany – XV, 1992

No.	Designation	Qty.	Note: Removal	Installation
1	Centering plate	1		Observe installation position
2	Retainer ring (split)	1	Remove with Special Tool **9332** and a bar magnet, using a press	Install with Special Tool **9332**, using a press
3	Cup spring	1		Center in such a way that it is not squeezed by the retainer ring
4	Piston C'	1	To remove, apply compressed air across the oil feed bore	Do not confuse with piston C. Grease seals with vaseline and push them carefully onto the centering plate, making sure the piston does not bind
5	Round seal	1		Replace
6	Round seal	1		Replace
7	Outer disc (1.8 mm thick)	1		Observe installation position
8	Inner disc	2		
9	Outer disc (2.1 mm thick)	1		Observe installation position
10	End disc	1		Observe installation position
11	Inner disc	3		
12	Outer disc	3		Observe installation position
13	Freewheel (2nd gear)	1		Fit into correct position Wider section of teeth faces inside
14	Sun shaft	1		
15	Rectangular ring	2		Ring ends must be hooked into each other
16	Planetary set	1		
17	Snap ring	1		

Printed in Germany – XV, 1992

No.	Designation	Qty.	Note: Removal	Installation
18	Adjusting outer disc	1		If required, reestablish correct thickness
19	Inner disc	5		To facilitate assembly, reinstall planetary set first
20	Outer disc	5		
21	Snap ring	1	Using Special Tool **9332** and suitable snap ring pliers, remove with a press	Install with Special Tool **9333**, using a press
22	Cup spring	1		
23	Piston D	1	To remove, apply compressed air across the oil feed bore	Grease seals with vaseline and press them carefully into cylinder, making sure the piston does not bind
24	Round seal	1		Replace
25	Round seal	1		Replace
26	Retainer ring (split)	1	Remove with Special Tool **9332** and a bar magnet, using a press	Install with Special Tool **9332**, using a press
27	Cup spring	1		
28	Piston C	1	To remove, apply compressed air across the oil feed bore	Do not confuse with piston C'. Grease seals with vaseline and press carefully into cylinder, making sure the piston does not bind.
29	Round seal	1		Replace
30	Round seal	1		Replace
31	Woodruff key	1		Place exactly into center of cutout of cylinder CD
32	Cylinder CD	1		

Printed in Germany – XV, 1992

Dismantling and assembly notes

Dismantling

1. Remove retainer ring with Special Tool **9332** and a bar magnet, using a press.

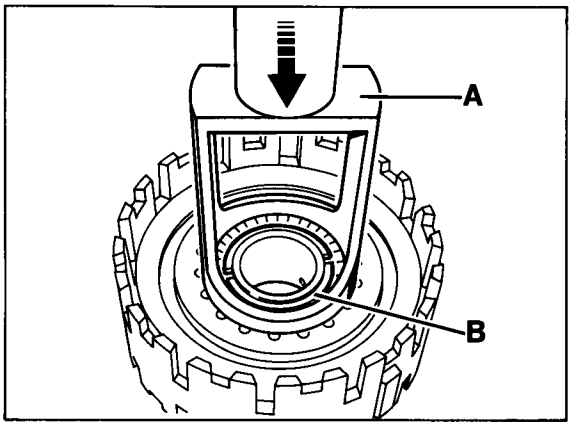

874-38

A - Special Tool **9332**
B - Split retainer ring

2. Remove pistons C and D by applying compressed air across the oil feed bores.

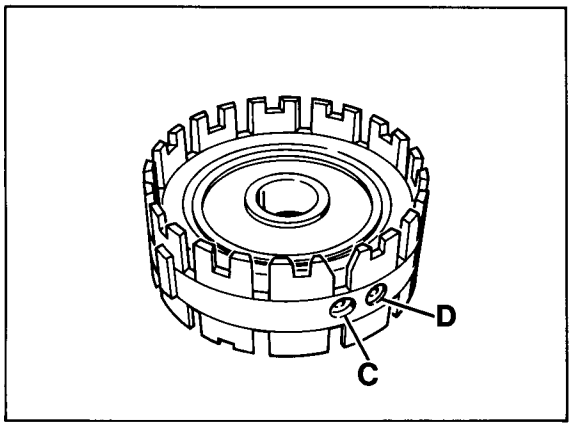

875-38

3. Remove snap ring with Special Tool **9332** and suitable pliers, using a press.

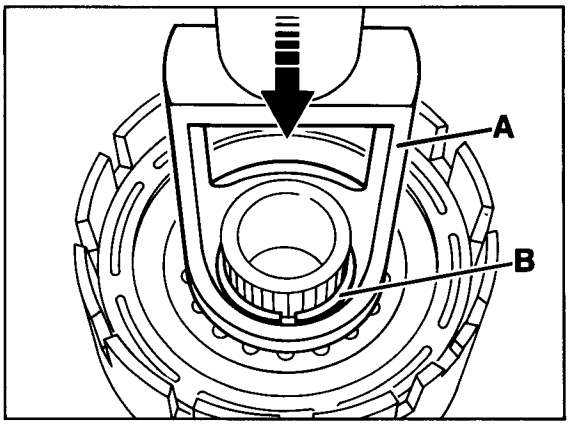

915-38

A - Special Tool **9332**
B - Snap ring

3. Remove retainer ring with Special Tool **9332** and a bar magnet, using a press.

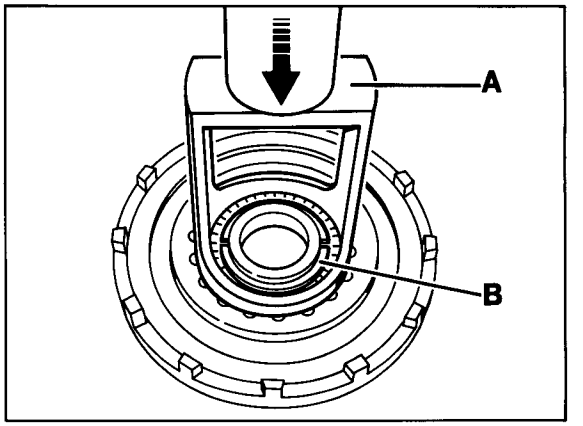

872-38

A - Special Tool **9332**
B - Split retainer ring

4. Remove piston C' by applying compressed air across the poil feed bore.

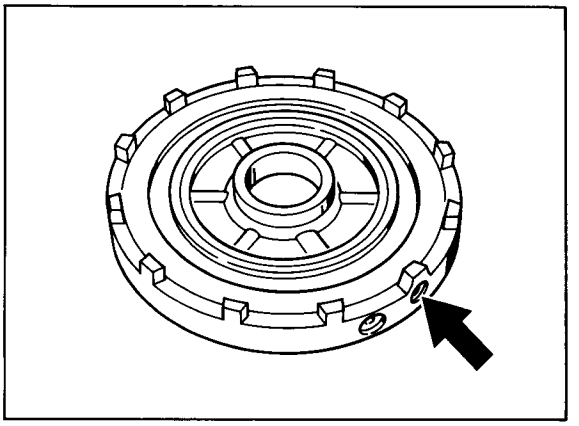

873-38

Assembly

1. Install snap ring with Special Tool **9333**, using a press.

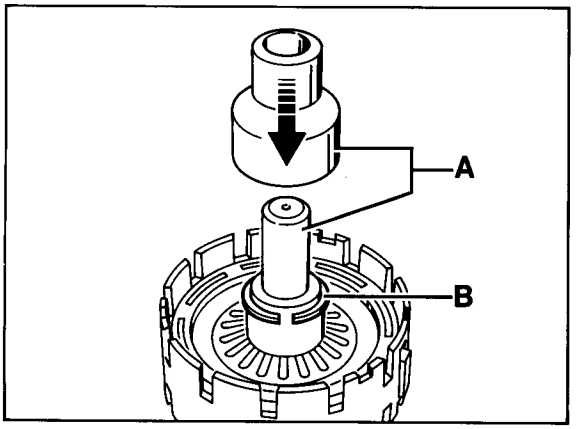

879-38

A - Special Tool **9333**
B - Snap ring

2. Install retainer ring with Special Tool **9332**, using a press.

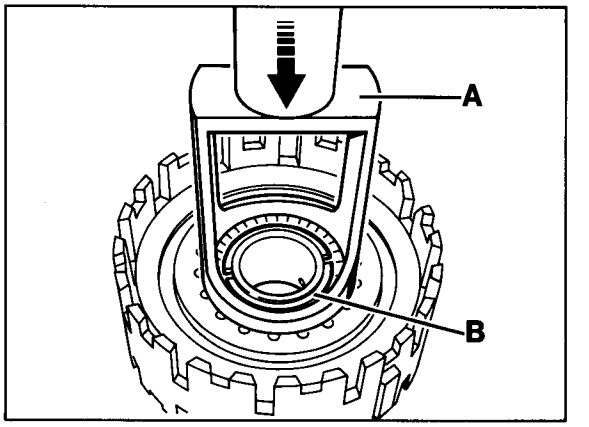

874-38

3. Coat discs with ATF fluid.

4. Place end disc (No. 10) into position so that the center tooth of the three adjacent teeth rests on the three notches (with cast lugs) of cylinder CD.

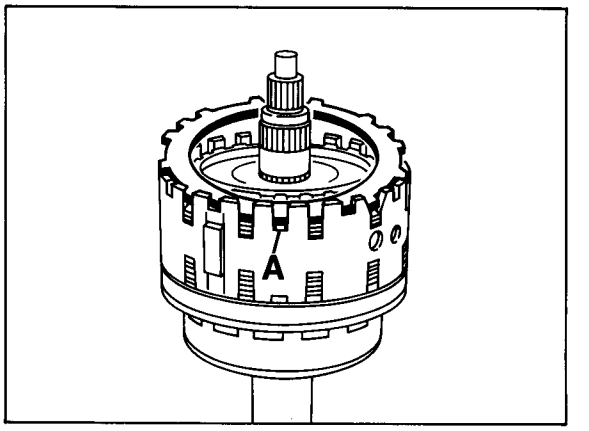

877-38

A - Lugs

5. The outer teeth of the outer discs C' must not protrude into the bevelled cutout of the cylinder.

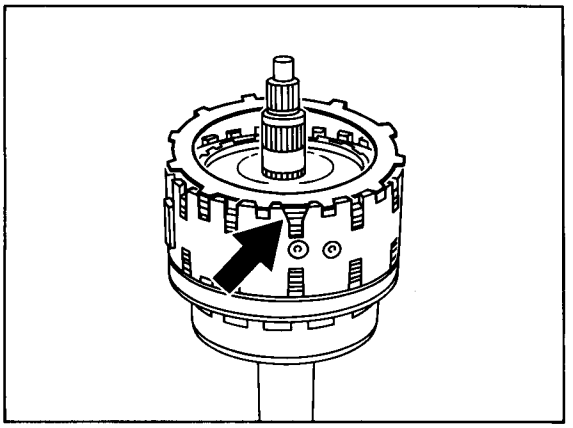

878-38

6. Place centering plate in position so that the bevelled cam fits into the corresponding bevelled cutout of cylinder CD.

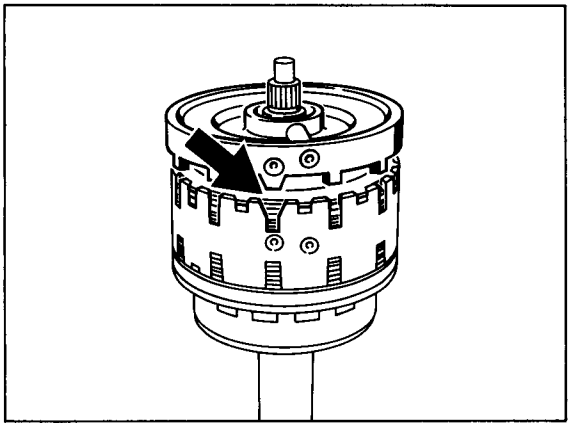

876-38

Determining air gap of brakes C', C and D

Brakes C' and C

Brake C'
Specification: 0.55...1.97 mm

Brake C
Specification: 0.63...2.40 mm

Determine air gap with a feeler gauge

Note

To avoid false readings, place centering plate under a suitable load (e.g. Special Tool **9508/1**).

Brake C'

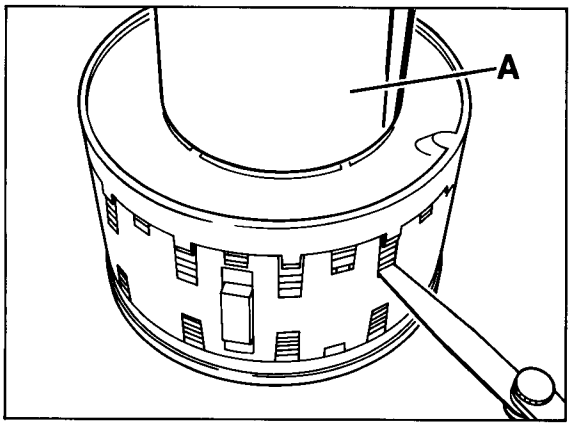

921-38

A - Special Tool **9508/1**

Brake C

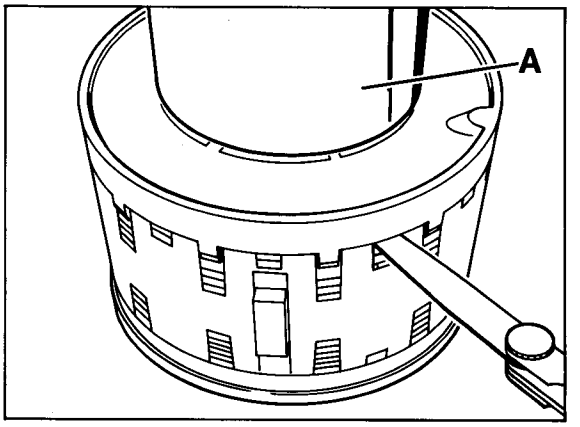

922-38

A - Special Tool **9508/1**

If the wear limit has been reached, all discs must be replaced.

Brake D

Specification: 1,34...2,39 mm

The air gap may be adjusted using the adjustment outer disc (18) available in a variety of thicknesses.

Determine air gap with a feeler gauge.

Printed in Germany – XV, 1992

Note

To avoid false readings, place support ring under a suitable load (e.g. Special Tool **9508/1**).

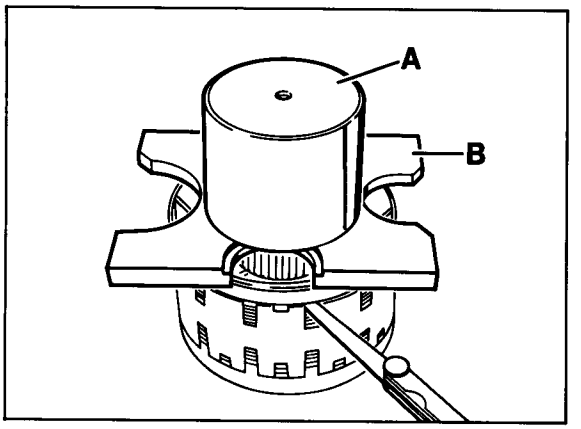

923-38

A - Special Tool **9508/1**
B - Special Tool **VW 402**

If the wear limit has been reached, all discs must be replaced and the air gap must be re-adjusted with the adjustment outer disc (18).

Printed in Germany – XV, 1992

Dismantling and assembling clutch B

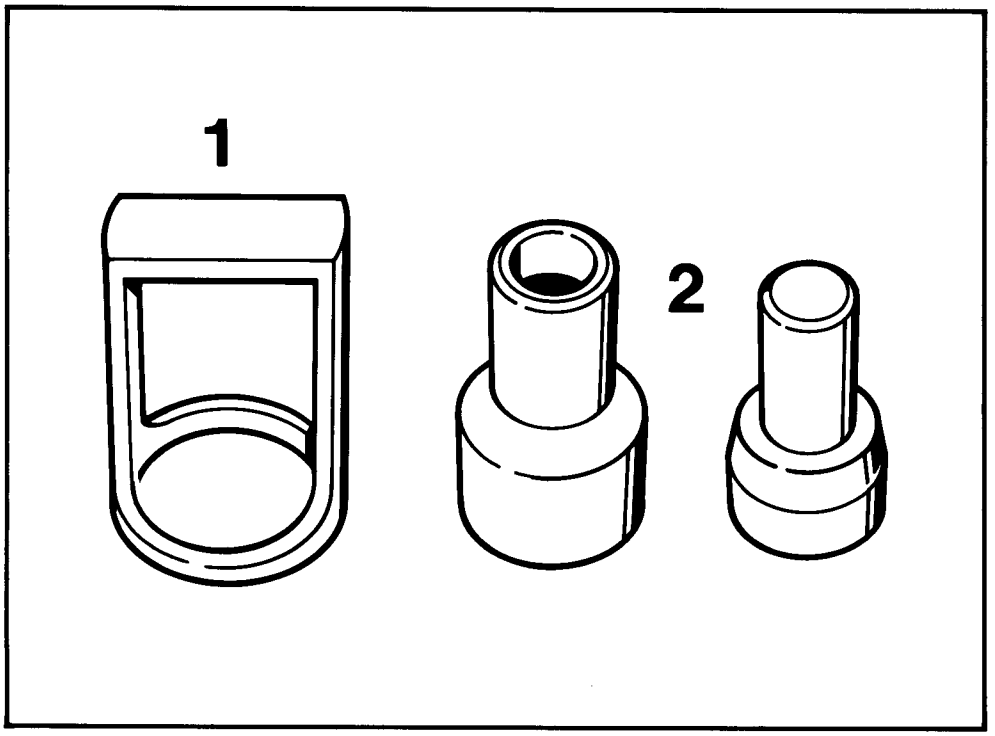

909-38

No.	Designation	Special tool	Order number	Explanation
1	Thrust piece	9332	000.721.933.20	
2	Assembly sleeve	9330/1	000.721.933.01	

Printed in Germany – XV, 1992

Dismantling and assembling clutch B

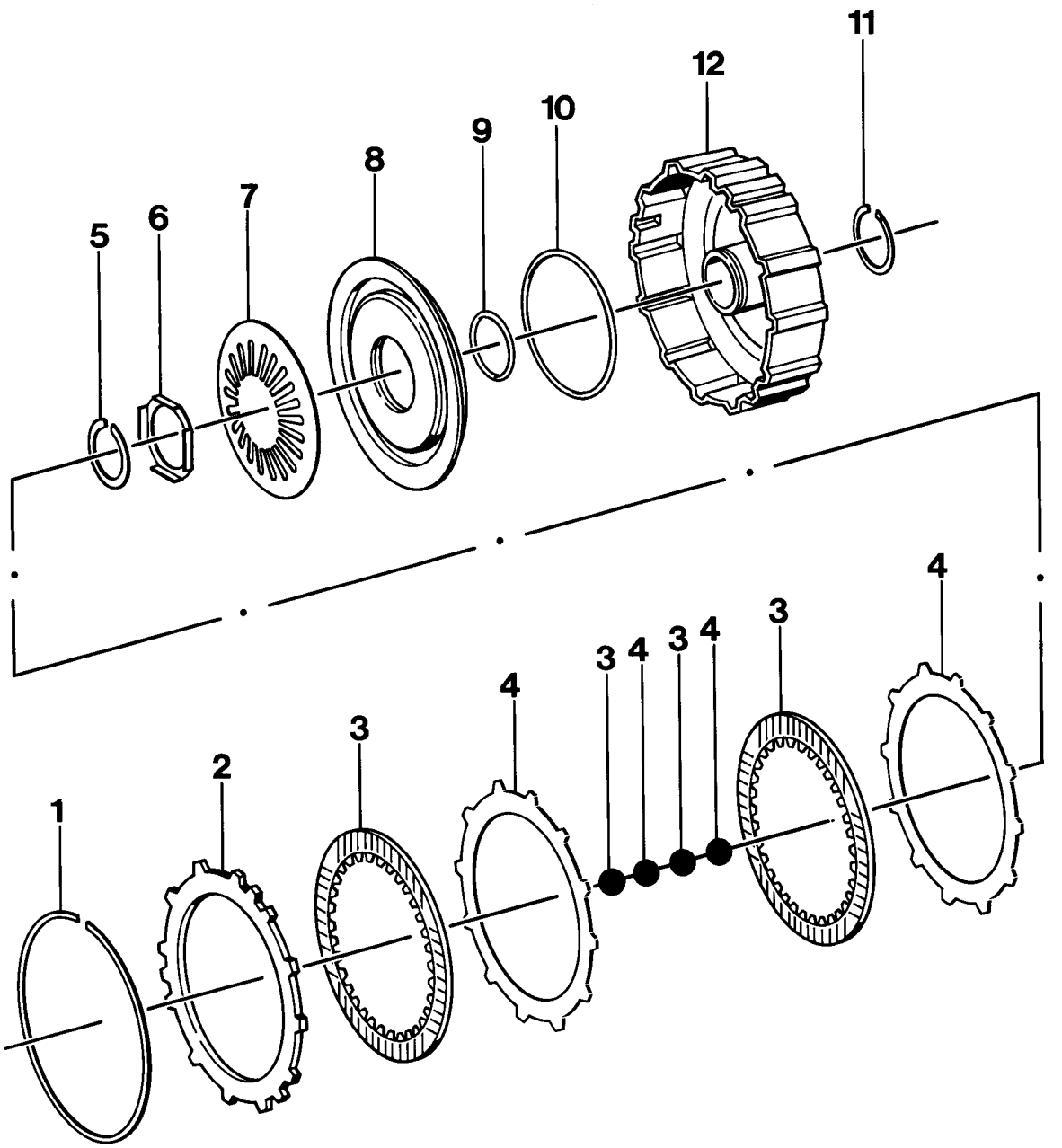

906-38

Printed in Germany – XV, 1992

No.	Designation	Qty.	Note: Removal	Installation
1	Snap ring	1		Redetermine thickness if required
2	End disc	1		
3	Inner disc	4		
4	Outer disc (2.1 mm thick)	4		
5	Snap ring	1	Remove with Special Tool **9332** using a press	Install with Special Tool **9330/1** using a press, checking for correct seating
6	Tab washer	1		
7	Cup spring	1		Place in correct position
8	Piston	1	To loosen, apply compressed air across the oil feed bore and take out by knocking lightly on a wooden support	Grease round seals (use vaseline) and press carefully into cylinder F, making sure the piston does not bind
9	Round seal	1		Replace
10	Round seal	1		Replace
11	Rectangular ring	1		Hook ends into each other
12	Cylinder	1		

Printed in Germany – XV, 1992

Dismantling and assembly notes

Dismantling

1. Remove snap ring with Special Tool **9332** using a press.

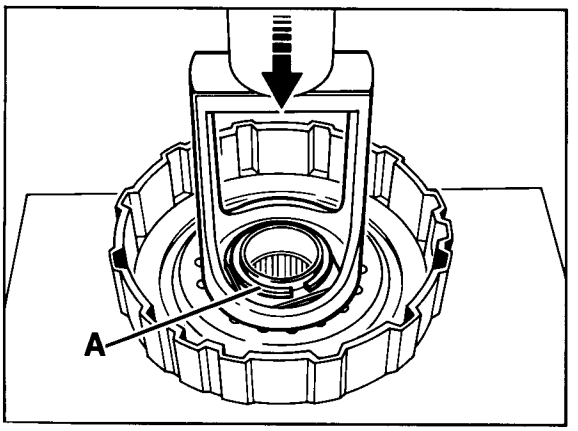

866-38

A = Snap ring

2. To loosen, apply compressed air across the oil feed bore and take out by knocking lightly on a wooden support.

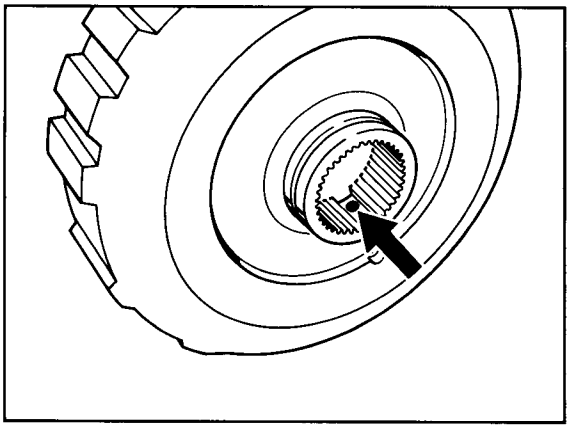

867-38

Assembly

1. Fit snap ring, placing internal section of Special Tool **9330/1** into position and pushing snap ring up to the taper. Then use outer section of Special Tool **9330/1** and a press to push the snap ring into the groove.

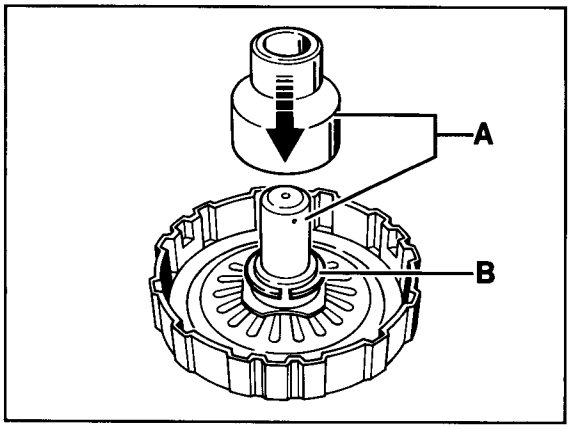

865-38

A = Special Tool **9330/1**
B = Snap ring

2. Coat discs with ATF fluid.

Printed in Germany – XV, 1992

Measuring the air gap

Standard: 1.23...1.57 mm

Note

The air gap can be adjusted with the snap ring (No. 1) that is available in three thicknesses (1.5 - 2.0 - 2.5 mm).

1. Use a screwdriver to press snap ring upwards along its entire circumference and measure air gap with a feeler gauge. If the wear limit has been resached, the entire disc pack must be replaced and the thickness of the snap ring must be redetermined.

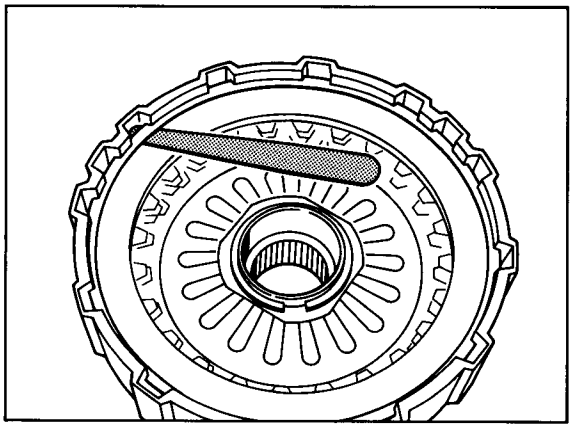

917-38

Dismantling and assembling clutch A

Printed in Germany – XV, 1992

Dismantling and assembling clutch A

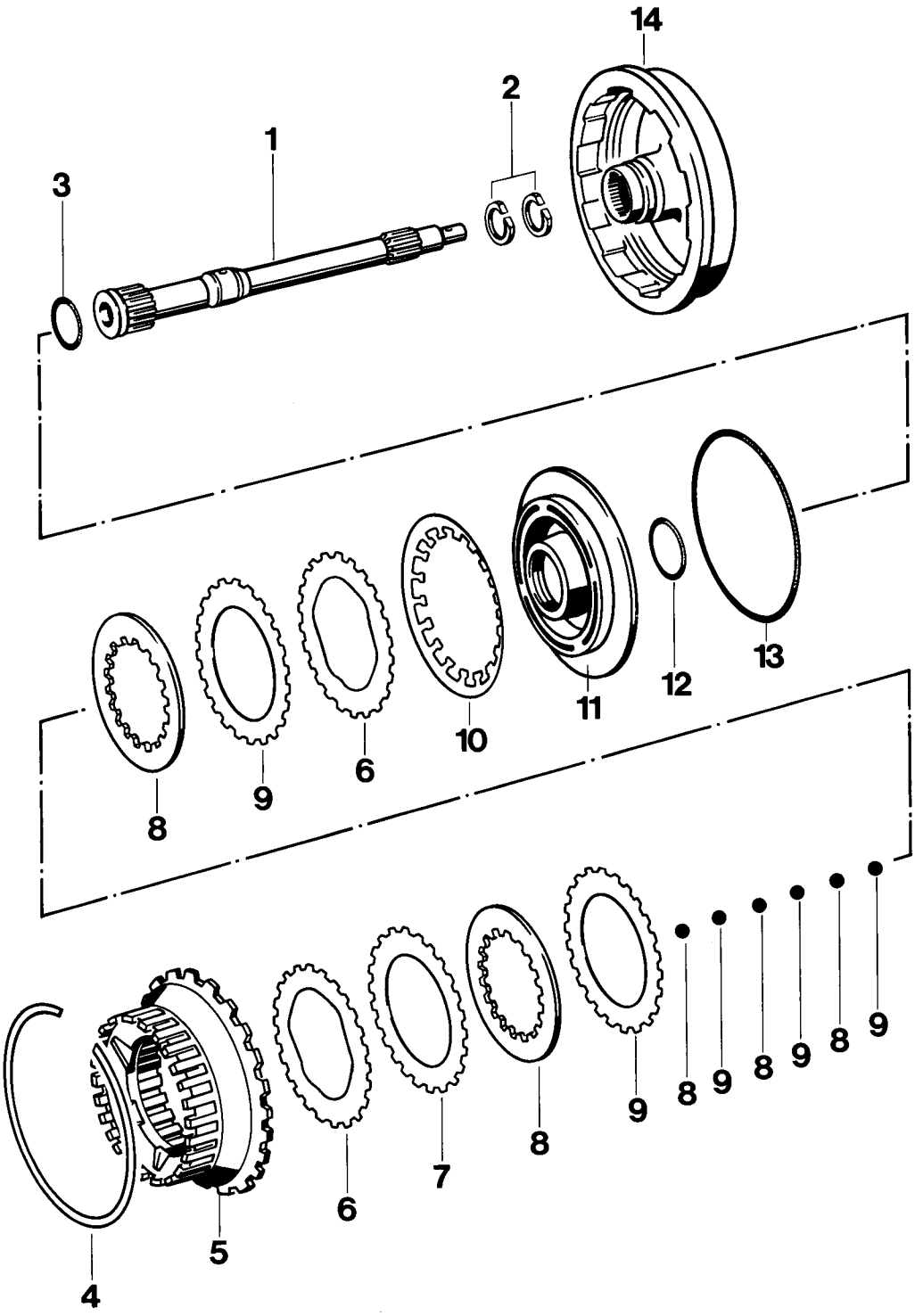

905-38

Printed in Germany – XV, 1992

No.	Designation	Qty.	Note: Removal	Installation
1	Drive shaft	1	Separate from cylinder by tapping lightly on a wooden support	
2	Rectangular ring	2		
3	Round seal	1		Replace, coat with vaseline
4	Snap ring	1	Remove with a suitable thrust piece (e.g. plate of 9329), using a press	Install with a suitable thrust piece (e.g. plate of 9329), using a press
5	Disc pack AB	1		
6	Spring disc	2		
7	Adjustment outer disc	1	Record thickness for reassembly	Refit old discs or use new disc of the same thickness
8	Inner disc	5		Wear limit: Thickness below 1.5 mm
9	Outer disc	5		
10	Cup spring	1		Install in correct position
11	Piston	1	To remove, apply compressed air across oil feed bore	Grease sealing rings (use vaseline) and press carefully into cylinder, making sure the piston does not bind.
12	Round seal	1		Replace
13	Round seal	1		Replace
14	Cylinder	1		

Printed in Germany – XV, 1992

Dismantling and assembly notes

Dismantling

1. Press down disc carrier with a suitable thrust piece (e.g. plate of 9329) using a press, and take out snap ring.

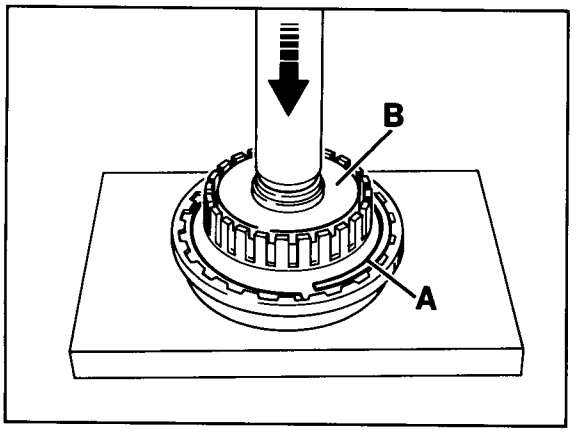

868-38

A - Snap ring
B - Plate of Special Tool 9323

2. To remove piston, apply compressed air across the oil feed bore.

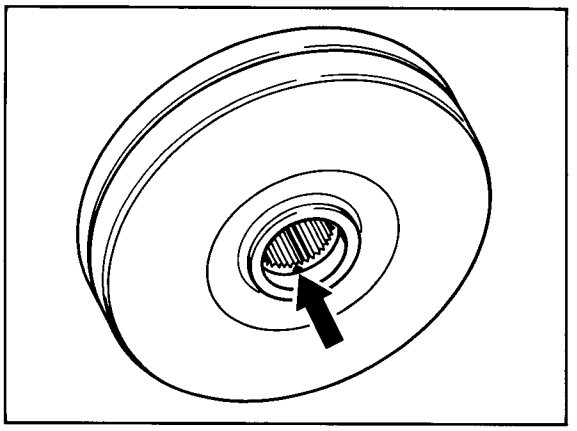

869-38

Assembly

1. If the wear limit of the inner discs has been reached, the entire disc pack must be replaced along with the old adjustment outer disc.

2. Coat discs with ATF fluid.

Determining the end clearance

Specification: 0.2...0.4 mm

Note

Check the end clearance whenever the transmission has been reassembled and readjust if required, using adjusting washer No. 12 (refer to page 37 - 105).

1. Assembly transmission (complete with spur gear drive and front transmission cover).

2. Screw centering pins **9321** into transmission case and apply some grease (vaseline) to stick paper gasket to sealing surface.

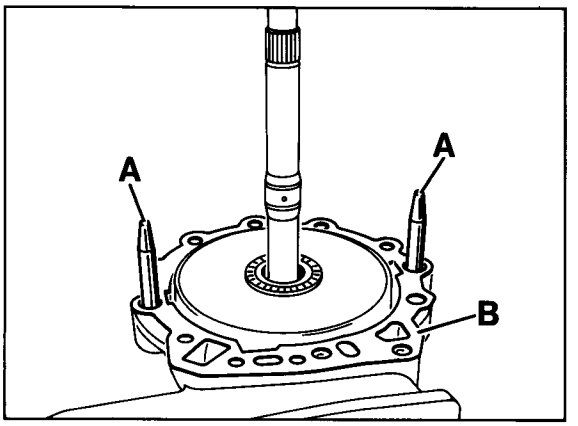

964-38

A - Centering pins **9321**
B - Gasket

3. Using some grease (use vaseline), stick the removed adjusting washer to the rear transmission case and put housing carefully into position.

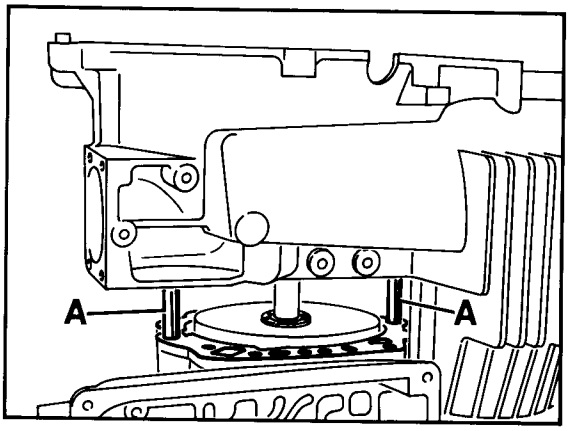

961-38

A - Centering pins **9321**

4. Tighten all mounting screws to 46 Nm (34 ftlb).

5. Mount measuring sleeve of Special Tool **9338** with three mounting screws on the stator shaft in such a manner that no play remains.

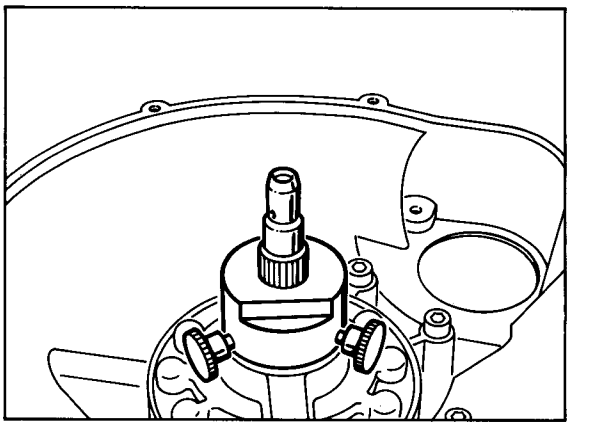

962-38

6. Slide measuring device of Special Tool **9338** over drive shaft teeth and tighten with clamping screw so that it cannot be tilted.

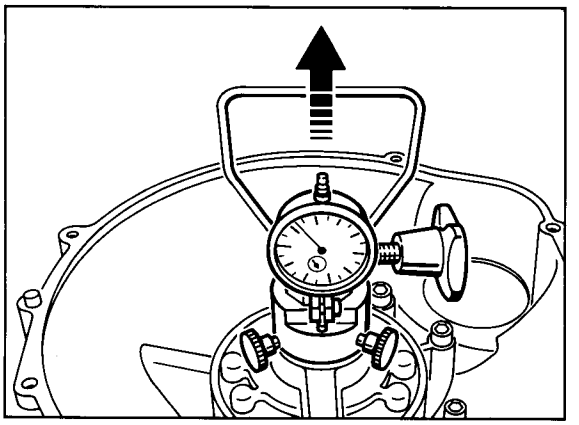

963-38

7. Set measuring sleeve to zero with a certain preload.

8. Determine end clearance by pulling the handle. Repeat measurement several times.

Note

If a deviation is detected, remove rear transmission housing again and fit a thinner or thicker adjusting washer as required.
Recheck end clearance afterwards.

Printed in Germany – XXI, 1994

Disassembling and assembling the long joint flange

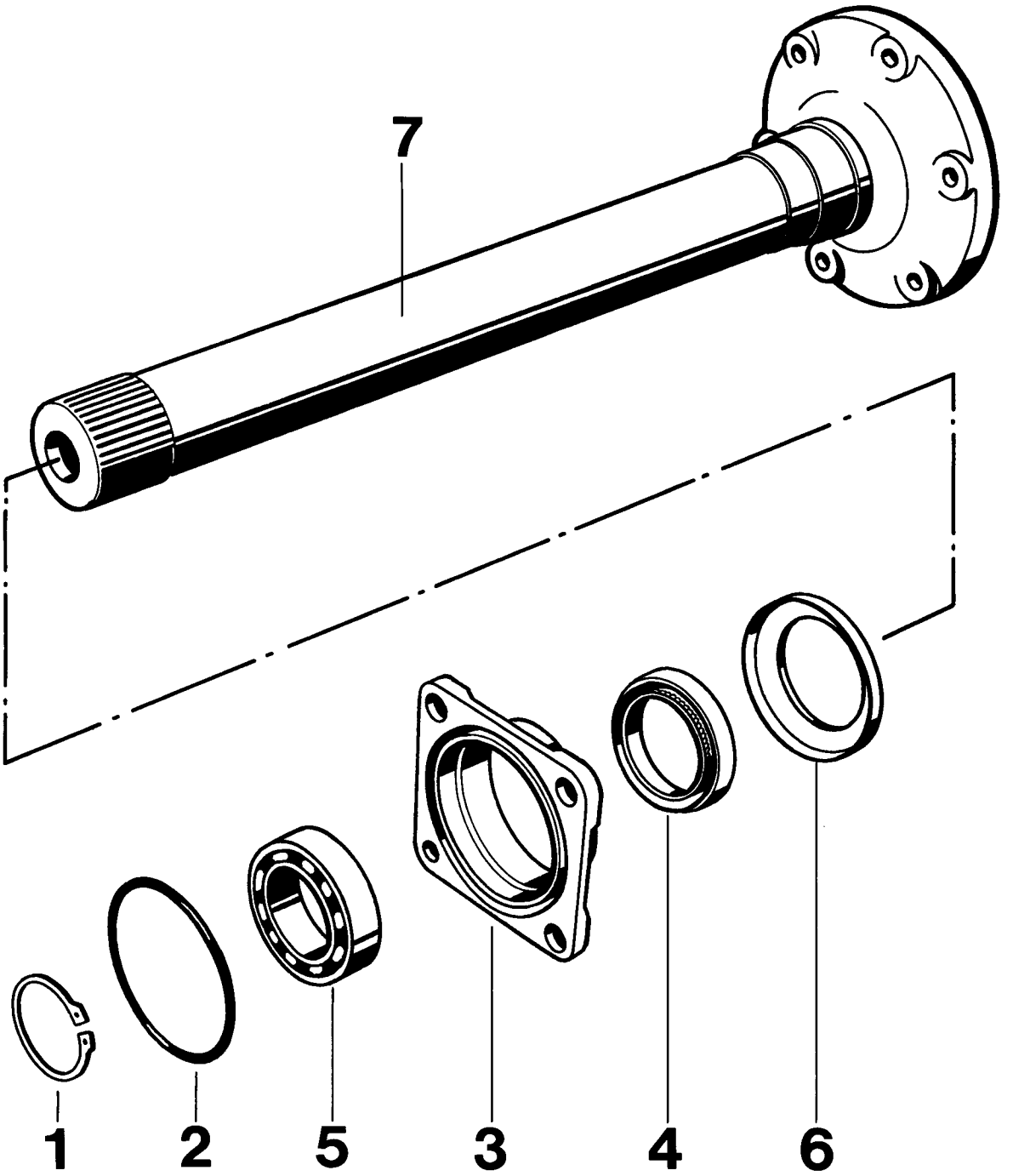

Printed in Germany – VI, 1990

No.	Designation	Qty.	Note: Removal	Installation
1	Circlip	1		
2	O-ring	1		Replace
3	Bearing cap	1		
4	Rotary shaft seal	1		Pack space between dust lip and sealing lip with grease (e.g. Shell 8420) and press in flush with suitable thrust piece
5	Ball bearing	1	Press off jointly with bearing cap	Press in until it bottoms with a suitable pressure piece
6	Protective ring	1		
7	Joint flange	1		

Printed in Germany – XV, 1992

Removing and installing the rotary shaft seal for the short joint flange

Removing

Note

The rotary shaft seal can also be replaced with the transmission in built-in condition.

1. Unscrew the hexagon screw for the joint flange and remove flange.

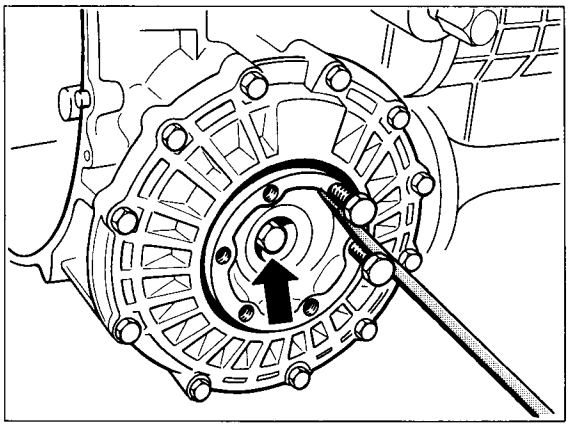

408-39

2. Lever out rotary shaft seal with **VW 681**.

Installing

1. Press in rotary shaft seal flush with suitable pressure piece.

2. Tighten hexagon screw for joint flange with **46 Nm (34 ftlb)**.

Printed in Germany – VI, 1990

Sealing off the driving shaft

1. Drain ATF

2. Remove engine with gearbox (do not unbolt engine from gearbox.

3. Remove intermediate plate (see page 37 - 107).

4. Remove bearing cap with **Torx insert T 27** and replace rotary shaft seal. Pack space between dust lip and sealing lip with grease (e.g. Shell 8420).
Press-in depth 2.0 ± 0.5 mm.

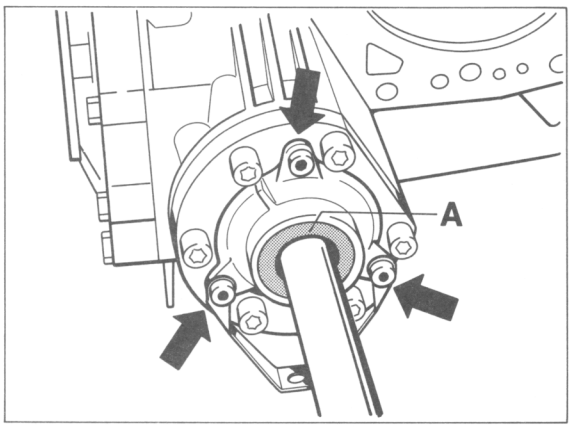

A = Rotary shaft seal 422-39

5. Fit bearing cap with new O-ring and tighten fixing screws with **10 Nm.**

6. Remove snap ring for bearing cap at intermediate plate and pull out cap.

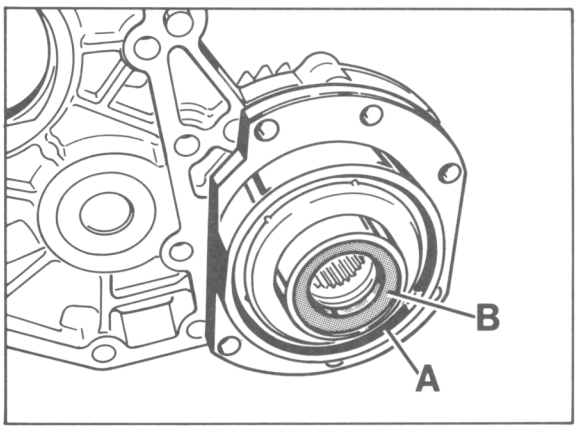

423-39

A = Snap ring

B = Rotary shaft seal

7. Replace rotary shaft seal.
Pack space between dust lip and sealing lip with grease (e.g. Shell 8420).
Press-in depth 2.0 ± 0.5 mm

8. Fit new O-ring and wet with ATF.

9. Insert bearing cap and fit snap ring.

10. Fill with ATF.

Adjusting the preload of the spur gear taper roller bearings

Adjusting spur gear II (intermediate gear)

1. Determine and record dimension "a" (e.g. 45.90 mm).

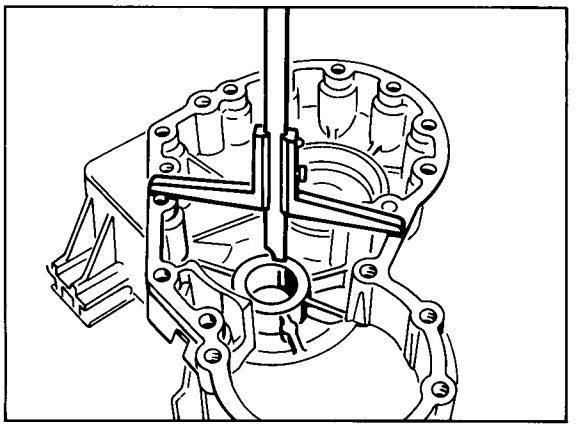

1030 - 39

2. Fit complete spur gear II and determine dimension "b" (e.g. 44.65 mm). Record measured value.

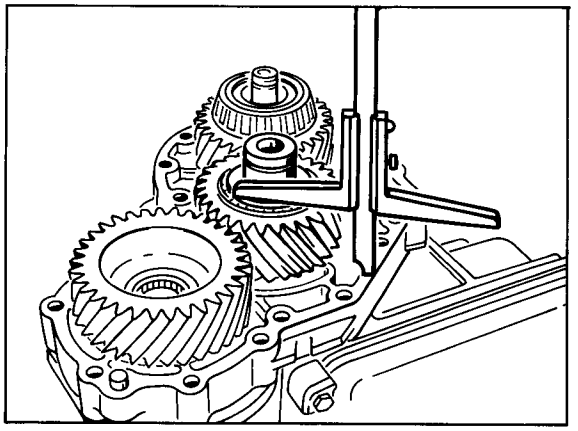

1031 - 39

3. Determine shim thickness by deducting dimension "b" from dimension "a" and adding a constant value of 0.22 mm (preload and thickness of compressed gasket).

Note

The constant value is 0.22 mm for all transmissions.

Example

Dimension "a" e.g.		45.90	mm
Dimension "b" e.g.	–	44.65	mm
		1.25	mm
Constant	+	0.22	mm
Shim thickness		1.47	mm

Note

Always round shim thickness up or down to the nearest 0.05 mm figure.

Printed in Germany – XV, 1992

Adjusting spur gear I (drive gear)

1. Remove intermediate plate.

2. Remove adjusting shim (refer to page 37 - 108, No. 16).

3. Remove spur gear II (intermediate gear) for measurement.

4. Bolt up cover with intermediate plate (but without gasket).
   Tighten all screws and bolts to 23 Nm (17 ftlb).

5. Internal puller (e.g. Schrem 20 - 30) into spur gear teeth.

6. Fit dial gauge holder VW 387 with dial gauge and zero out dial gauge with a preload of 2 mm.

7. Move spur gear I up and down on internal puller and read off play on dial gauge (e.g. 1.18 mm).

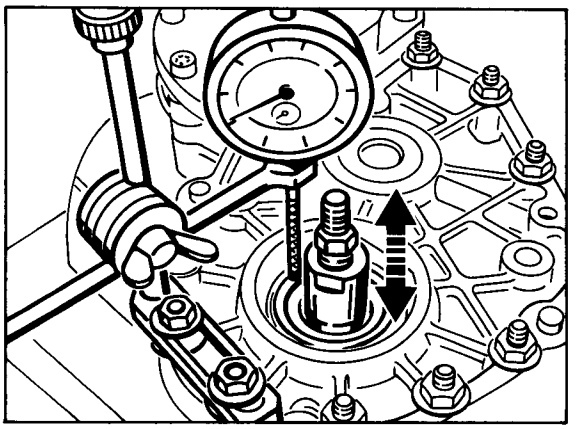

1029 - 39

A = Dial gauge extension
B = Internal puller

Note

Do no turn or tilt the spur gear when measuring the clearance. Repeat measuring process several times.

8. Determine shim thickness. Measured value plus 0.20 mm (preload and thickness of compressed gasket) equals shim thickness

Note

The constant value is 0.20 mm for all transmissions.

Example

Measured value		1.18 mm
Constant value	+	0.20 mm
Shim thickness		1.38 mm

9. Fit a shim of the determined thickness (1.38 mm in our example).

Note

Always round shim thickness up or down to the nearest 0.05 mm figure.

Printed in Germany – XV, 1992

Removing and installing differential and drive pinion

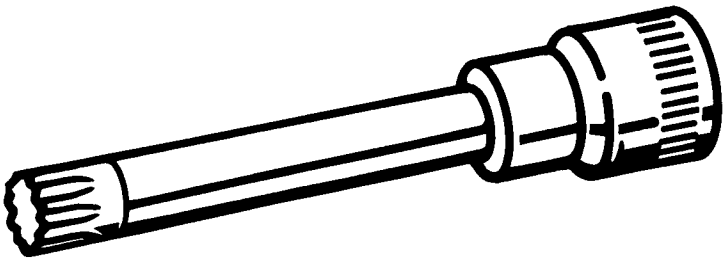

966-39

No.	Designation	Special tool	Order number	Explanation
	Socket	9330	000.721.933.00	

Printed in Germany – XV, 1992

Removing and installing differential and drive pinion

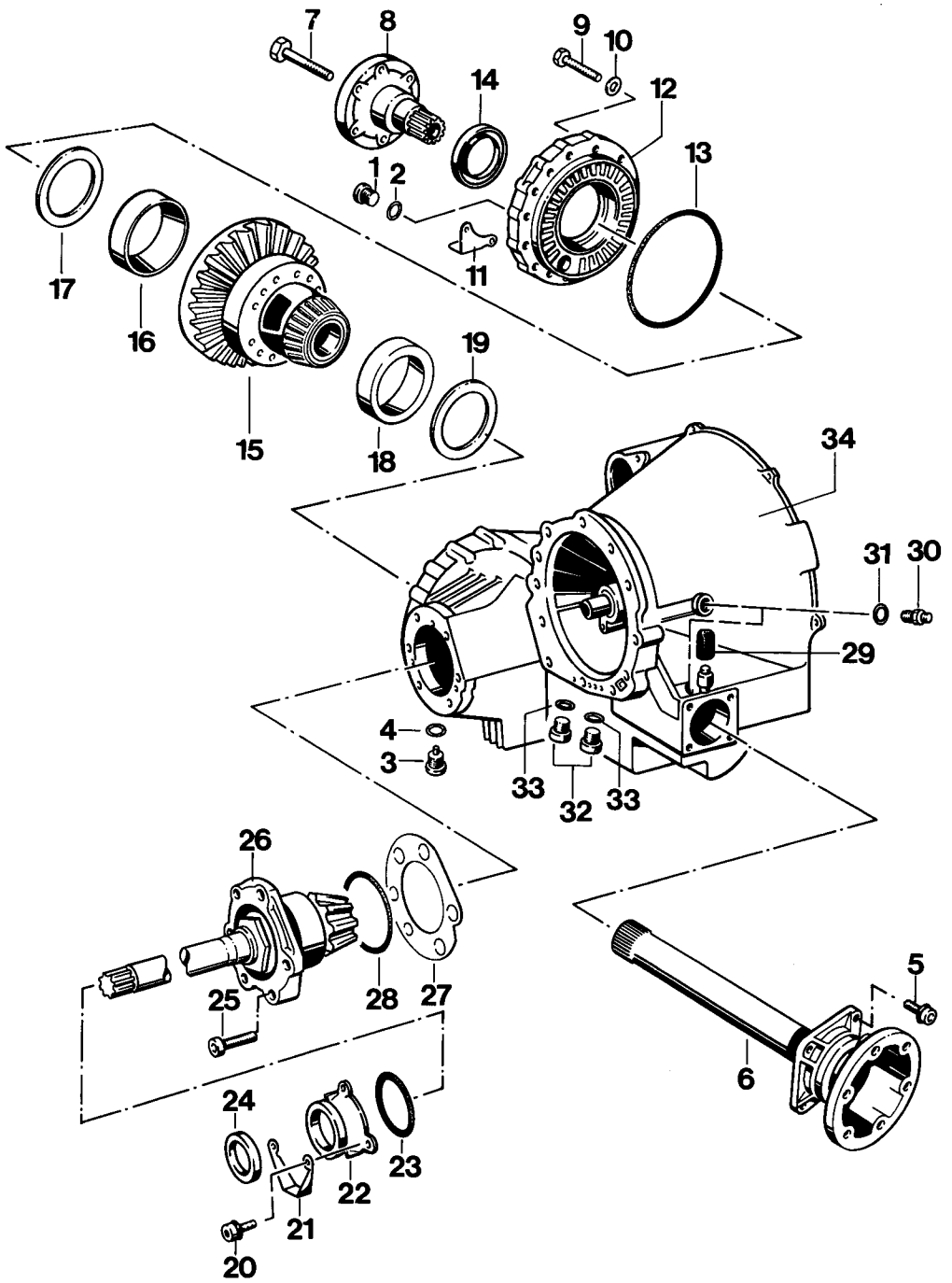

Printed in Germany – XV, 1992

No.	Designation	Qty.	Note: Removal	Installation
1	Plug	1		Tighten to 50 Nm (37 ftlb)
2	Seal	1		Replace
3	Plug with solenoid	1		Tighten to 50 Nm (37 ftlb)
4	Seal	1		Replace
5	Pan head screw	4	Remove with Special Tool 9330	Tighten to 23 Nm (17 ftlb)
6	Halfshaft flange	1		For dismantling, refer to page 39 - 102
7	Hexagon head bolt	1		Tighten to 46 Nm (34 ftlb)
8	Halfshaft flange	1		
9	Hexagon head bolt	11		Tighten to 23 Nm (17 ftlb)
10	Spring washer	11		
11	Bracket	1		
12	Transmission side cover	1		
13	Round seal	1		Replace, oil lightly
14	Shaft seal	1	Replace	Pack space between dust lip and sealing lip with grease (e.g. Shell 8420) and press in flush
15	Differential	1		
16	Taper roller bearing outer race	1		
17	Adjusting shim "S_1"	X	Record thickness for refitting	Redetermine thickness if required
18	Taper roller bearing outer race	1		
19	Adjusting shim "S_2"	X	Record thickness for refitting	Redetermine thickness if required
20	Pan head screw	3		Tighten to 10 Nm (7 ftlb)

Printed in Germany – XV, 1992

No.	Designation	Qty.	Note: Removal	Installation
21	Bracket	1		
22	Bearing cover	1		
23	Round seal	1		Replace
24	Shaft seal	1		Replace. Pack space between dust lip and sealing lip with grease (e.g. Shell 8420). Press in to depth of 2.0 ± 0.5 mm
25	Pan head screw	6		Tighten to 50 Nm (37 ftlb)
26	Drive pinionm with bearing assembly	1	To drive out, use a plastic hammer to apply light blows on the drive pinion head	Observe matching number, readjust if required
27	Adjusting shim "S_3"	X	Record thickness for reassembly	Redetermine thickness if required
28	Round seal	1		Replace, oil lightly
29	Breather	1		
30	Screw-in flange	2		Tighten to 35 Nm (26 ftlb)
31	Seal	2		Replace
32	Plug	2		Tighten to 25 Nm (18 ftlb)
33	Seal	2		Replace
34	Rear transmission housing	1		

Printed in Germany – XV, 1992

Removal note

Mount rear transmission case with converter housing on assembly support.

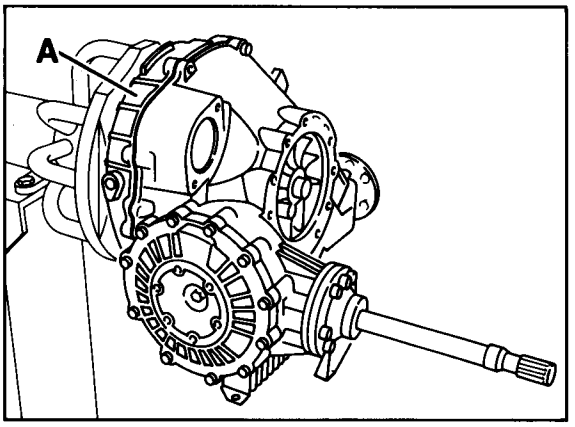

965-39

A - Converter housing (spare part)

Printed in Germany – XV, 1992

Dismantling and assembling differential

Printed in Germany – XV, 1992

Dismantling and assembling differential

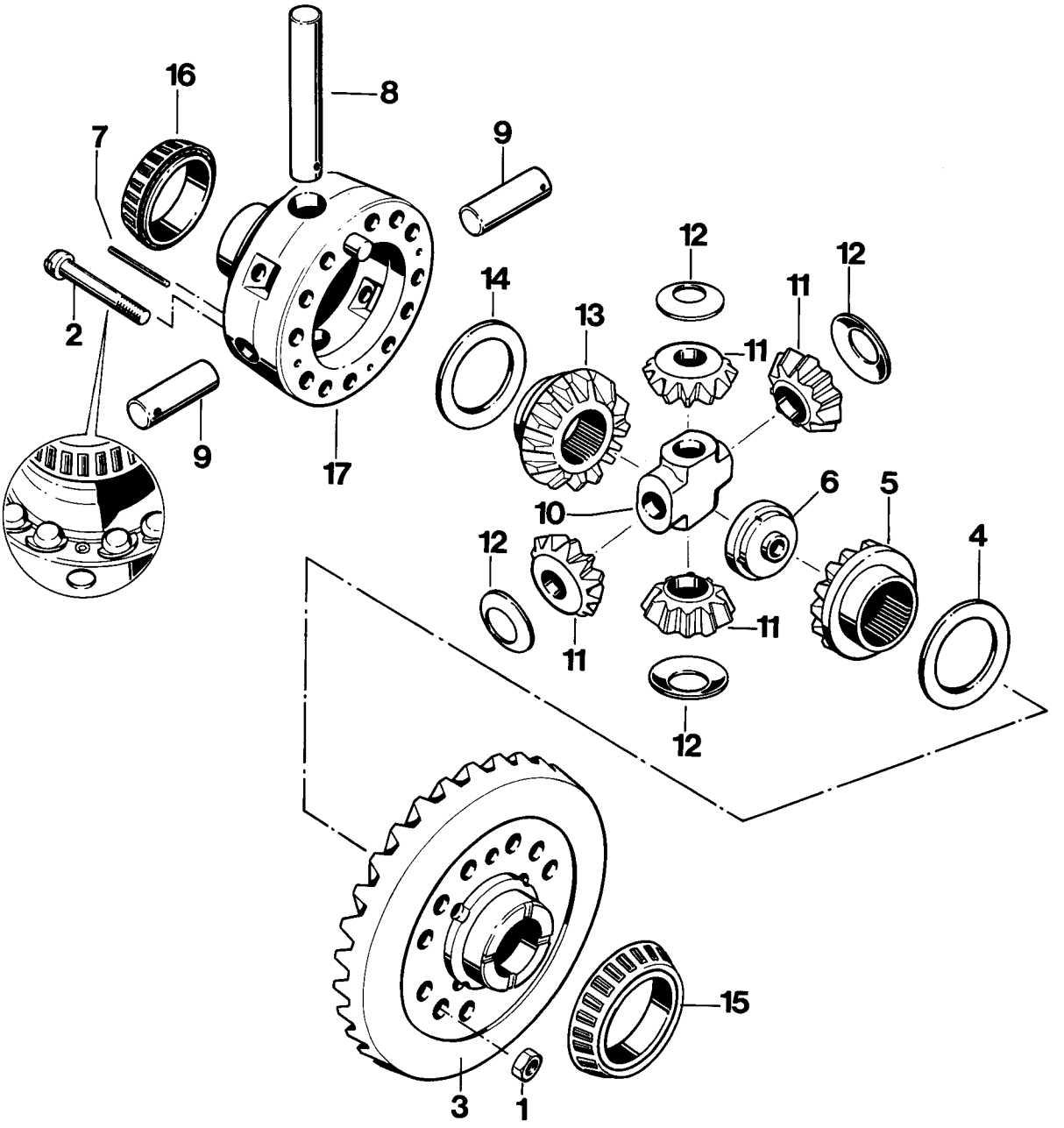

960-39

No.	Designation	Qty.	Note: Removal	Installation
1	Hexagon nut	12		Replace. Threads must be dry and free from grease. Secure with Loctite 262, tighten to **85 Nm** (63 ftlb)
2	Lock screw	12		Replace. Threads must be dry and free from grease. Install in correct position
3	Ring gear	1	Separate from housing by applying light blows with a plastic hammer	Observe matching number. Readjust if required
4	Thrust washer	1		
5	Shaft bevel gear	1		
6	Nut	1		
7	Roll pin	3		Press in place in correct position
8	Stud (long)	1		Lock with roll pin
9	Stud (short)	2		Lock with roll pin
10	Cross fitting	1		
11	Bevel gear	4		
12	Thrust washer	4		
13	Shaft bevel gear	1		
14	Thrust washer	1		
15	Taper roller bearing inner race	1	Pull of with suitable puller, or remove ring gear and take out from inside through bores	Heat to approx. 120° C and press on
16	Taper roller bearing inner race	1	Pull off with P 263	Heat to approx. 120° C and press on
17	Housing	1		Fit centering pin with Loctite 262

Printed in Germany - XXII, 1994

Dismantling and assembling drive pinion

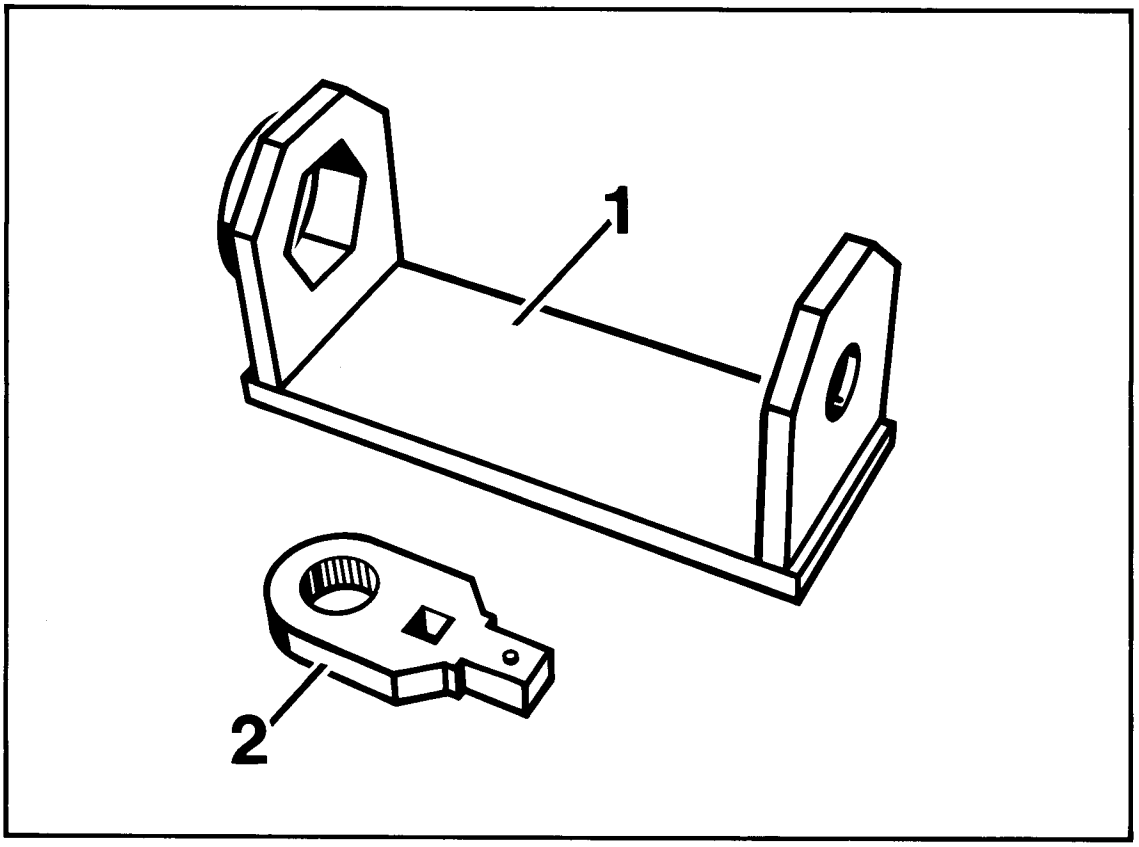

967-39

No.	Designation	Special tool	Order number	Explanation
1	Retainer bracket	9337	000.721.933.70	
2	Insert	9282	000.721.928.20	

Printed in Germany – XV, 1992

Dismantling and assembling drive pinion

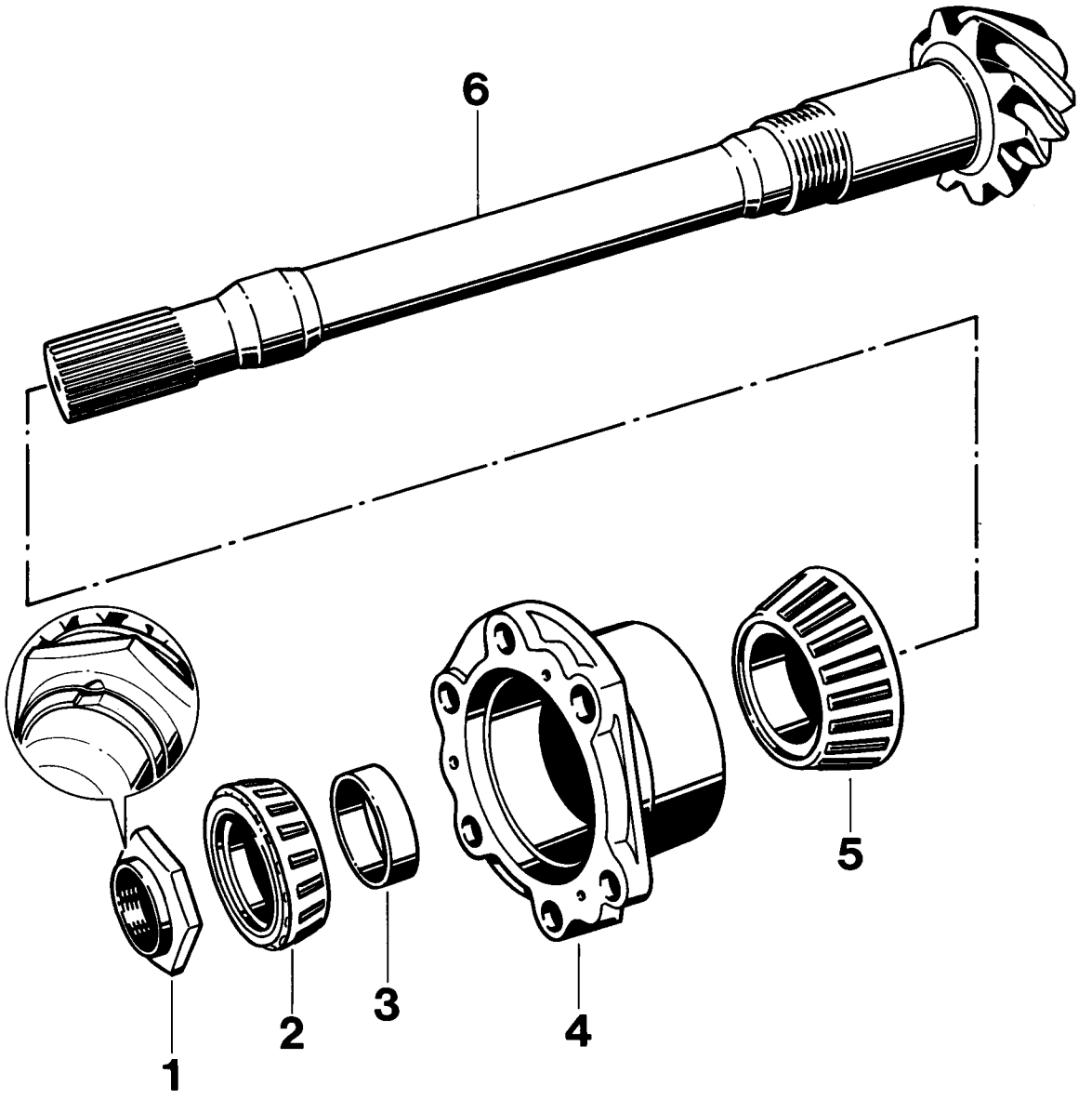

944-39

Printed in Germany – XV, 1992

No.	Designation	Qty.	Note: Removal	Installation
1	Lock nut	1	Undo with Special Tool **9337** and **9282**	Tighten to 250 Nm (184 ftlb) and secure by upsetting the flange in two places
2	Taper roller bearing inner race	1	Press off with bearing flange	Heat to approx. 120° C and press on
3	Adjusting ring	X		
4	Bearing flange	1		Only available pread-justed as a complete spare assembly (items 2 to 5)
5	Taper roller bearing inner race	1	Press off with separating device	Heat to approx. 120 °C and press on
6	Drive pinion	1		Readjust if required, observe matching number

Printed in Germany – XV, 1992

Dismantling note

Dismantling

Undo lock nut with Special Tools **9337** and **9282**.

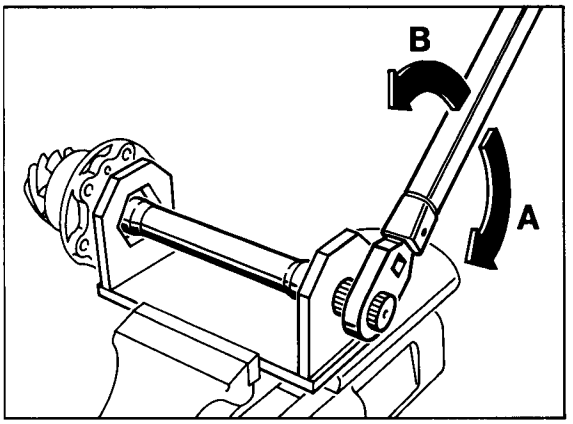

968-39

A - Undoing
B - Tightening

Printed in Germany – XV, 1992

Adjusting drive set

Tools

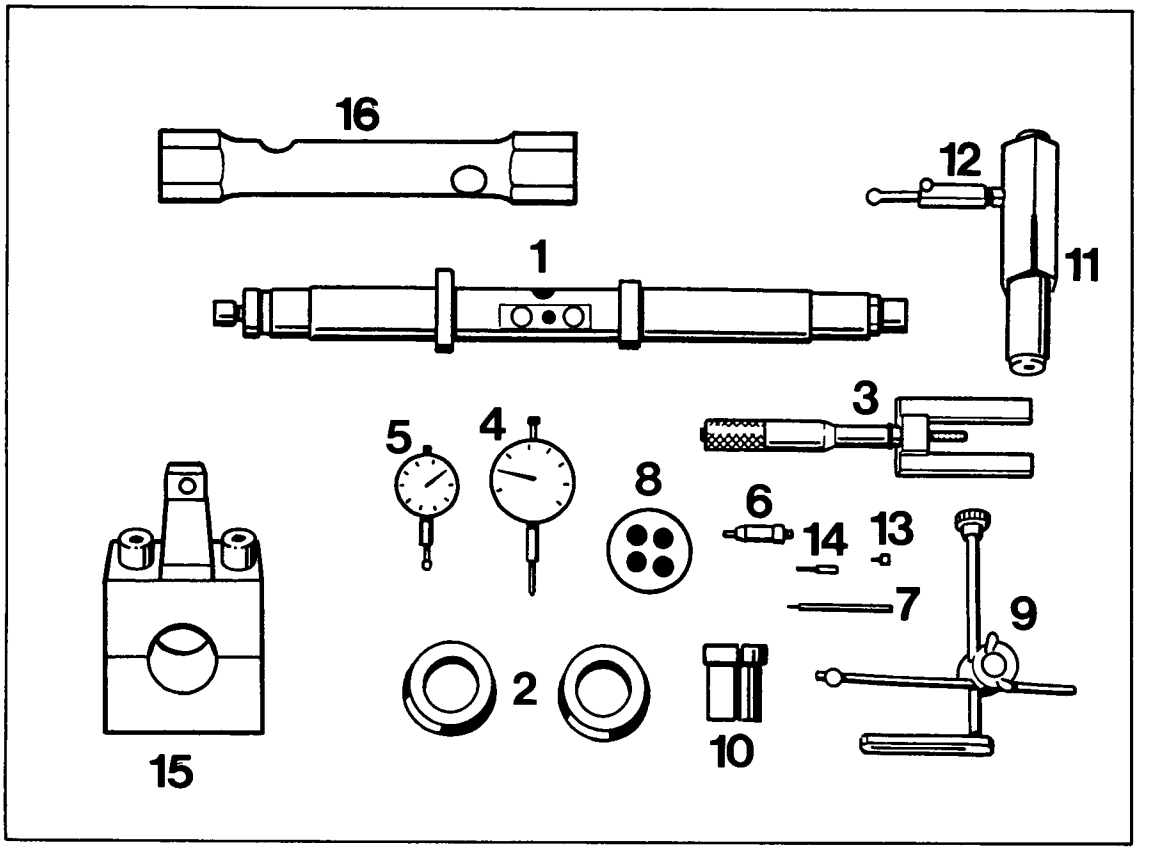

Printed in Germany – XV, 1992

Adjusting drive set

Tools

No.	Designation	Special tool	Order number	Explanation
1	Measuring mandrel	VW 385/1		
2	Centering discs	9327	000.721.934.10	
3	Master gauge	VW 385/30		
4	Dial gauge	–		commercially available
5	Dial gauge	–		commercially available, measuring range 3mm
6	Gauge plunger	VW 385/14		
7	Dial gauge extension	VW 385/56		30 mm long
8	Gauge block plate	9281	000.721.928.10	
9	Dial gauge bracket	VW 387		
10	Clamping sleeve	9145	000.721.914.50	
11	Adjusting device	VW 521		
12	Measuring lever	VW 388		
13	Dial gauge extension	VW 382/10		6.0 mm long
14	Dial gauge extension	VW 385/53		14 mm long
15	Clamping device	9339	000.721.933.90	
16	Socket wrench (24 mm A/F)	–		commercially available (e.g. Stahlwille No. 10 750)

Printed in Germany – XXI, 1994

Practical procedure when readjusting the drive set

If it becomes necessary to adjust drive pinion and ring gear, follow the below sequence to ensure an efficient working procedure:

1. Determine the total shim thickness "Stot" (S_1 plus S_2) for the specified preload on the taper roller bearings/differential.

2. Determine the thickness of shim "S_3".

3. Split the total shim thickness "Stot" into S_1 and S_2 so that the specified circumferential backlash is present between ring gear and drive pinion.

The aim of this adjustment is to restore the smoothest running position which has been achieved on test equipment in the production line.

To achieve correct results, greatest possible cleanliness for all assembly work and measuring procedures is essential.

When assembling the final drive assembly, it is only necessary to readjust drive pinion and ring gear or drive set if components have been replaced which have a direct influence on the adjustment. Refer to the following table to avoid unnecessary adjustment procedures!

Adjust: / Replaced component	Ring gear (S_1 + S_2)	Drive pinion (S_3)
Rear transmission case	x	x
Transmission side cover	x	
Bearing assembly for drive pinion	x	x
Drive set	x	x
Differential housing	x	
Taper roller bearing for differential	x	

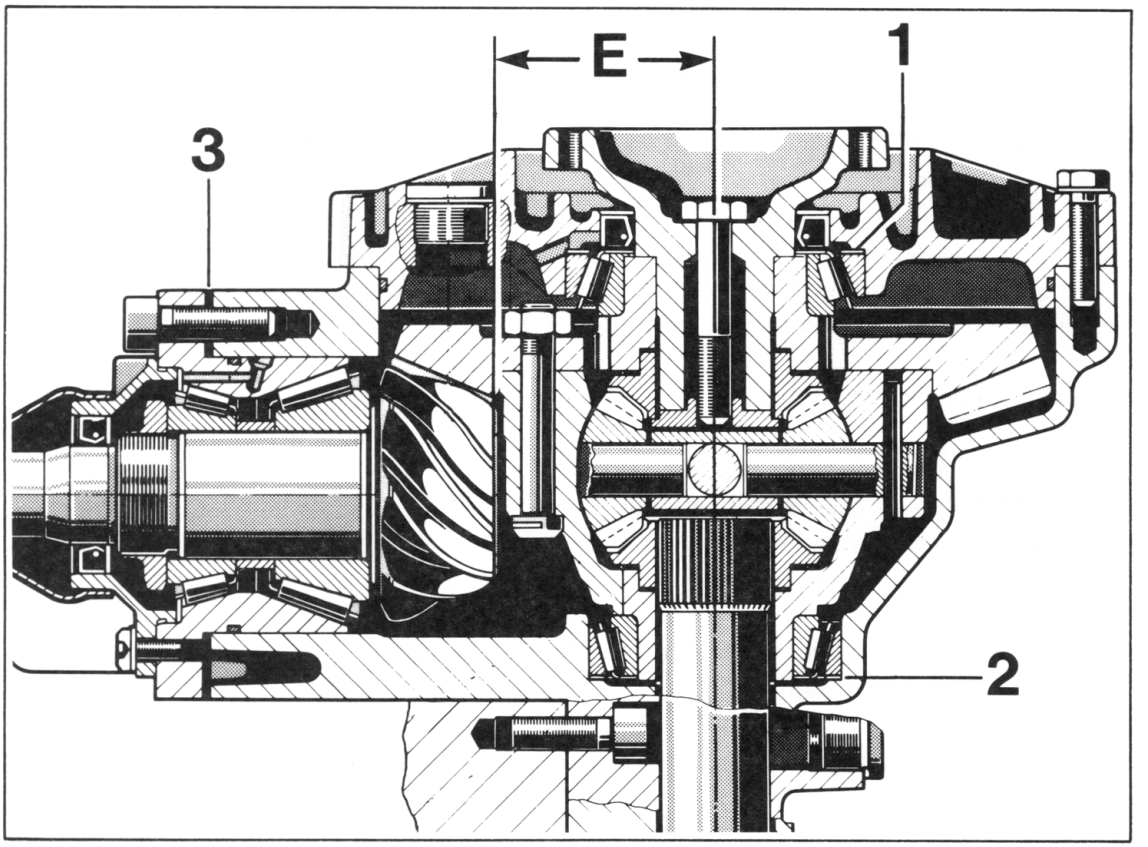

945-39

1 – Spacer S_1
2 – Spacer S_2
3 – Adjusting shim S_3
E – Adjustment dimension

Correct results can only be achieved if assembly work and measuring procedures are carried out carefully and with maximum cleanliness.

Adjusting drive set

General

The setting of drive pinion and ring gear is a determining factor for the service life and smooth running of the rear-axle drive. Drive pinions and ring gear that have been checked for good tooth contact pattern and low noise in both directions of rotation on special test equipment are therefore matched during production. The position at which smoothest running can be achieved is determined by shifting the drive pinion axially, with the ring gear being kept within the tolerance of the prescribed tooth backlash. The deviation "r" from the specified design dimension "Ro" is measured, added to the design dimension "Ro" and engraved on the ring gear as setting value "E".

During initial production, drive sets that feature only the values for production setting were used. When replacing components on those drive sets that affect the drive pinion position directly (transmission housing and bearing assembly for drive pinion), a measurement of **actual values** is required (refer to page 39 - 131).

Production version "A"

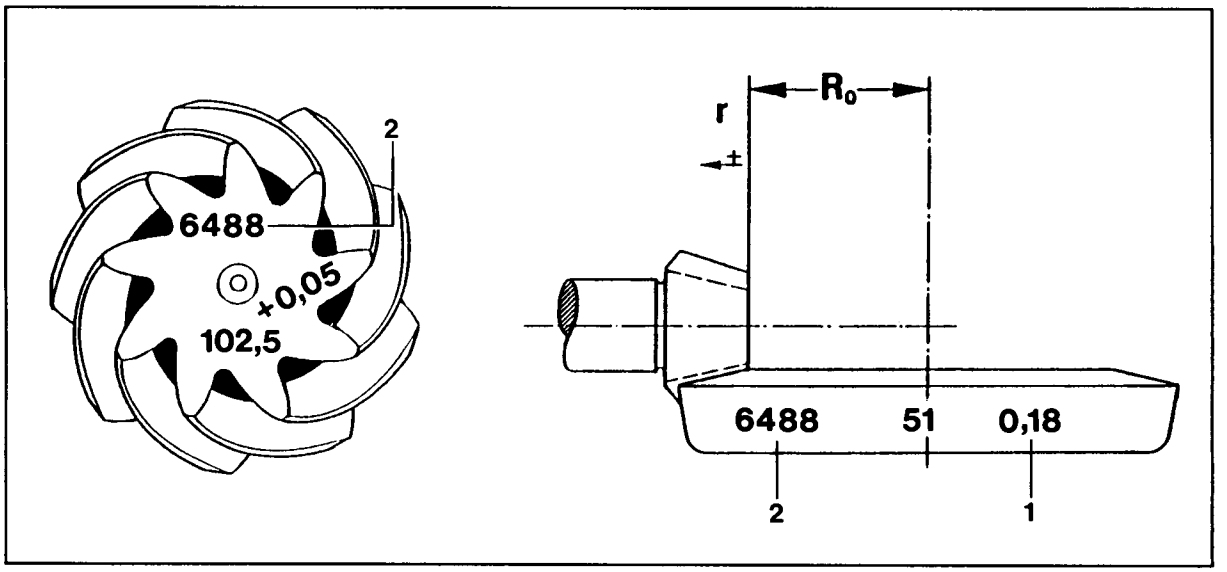

994-39

1 - Backlash (e.g. 0.18 mm)
2 - Matching number

All other characters are used for adjustment in production.

Printed in Germany – XV, 1992

Version "B" for service

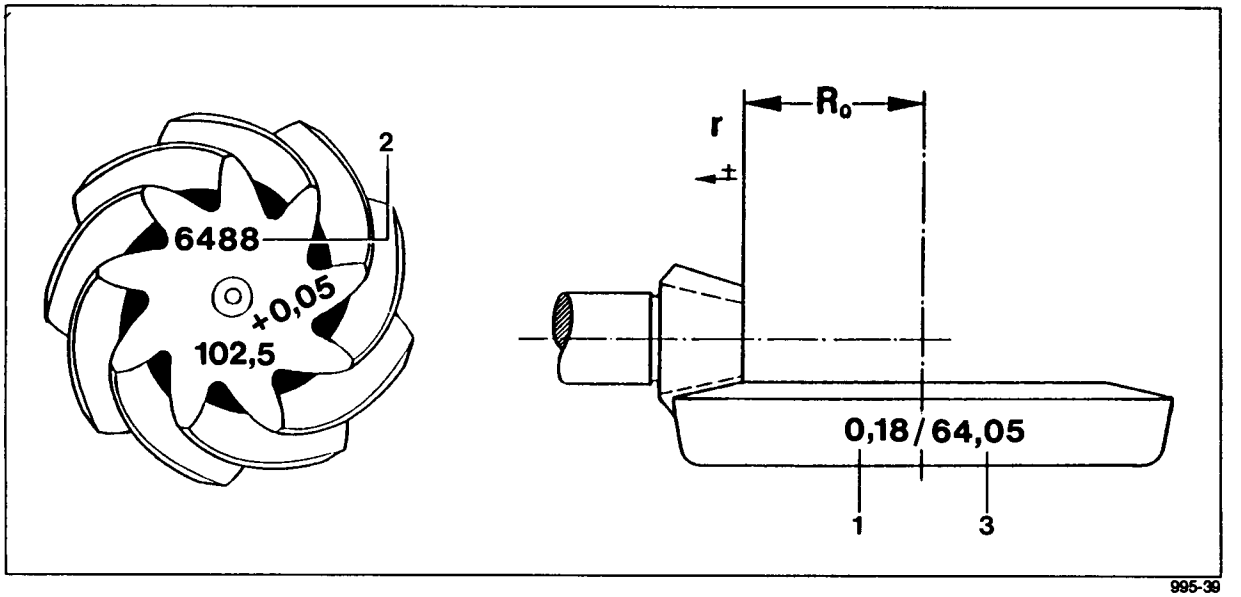

1 - Backlash "F" (e.g. 0.18 mm)

2 - Matching number
3 - Setting dimension "E" (e.g. 64.05 mm)

Version "C" for service

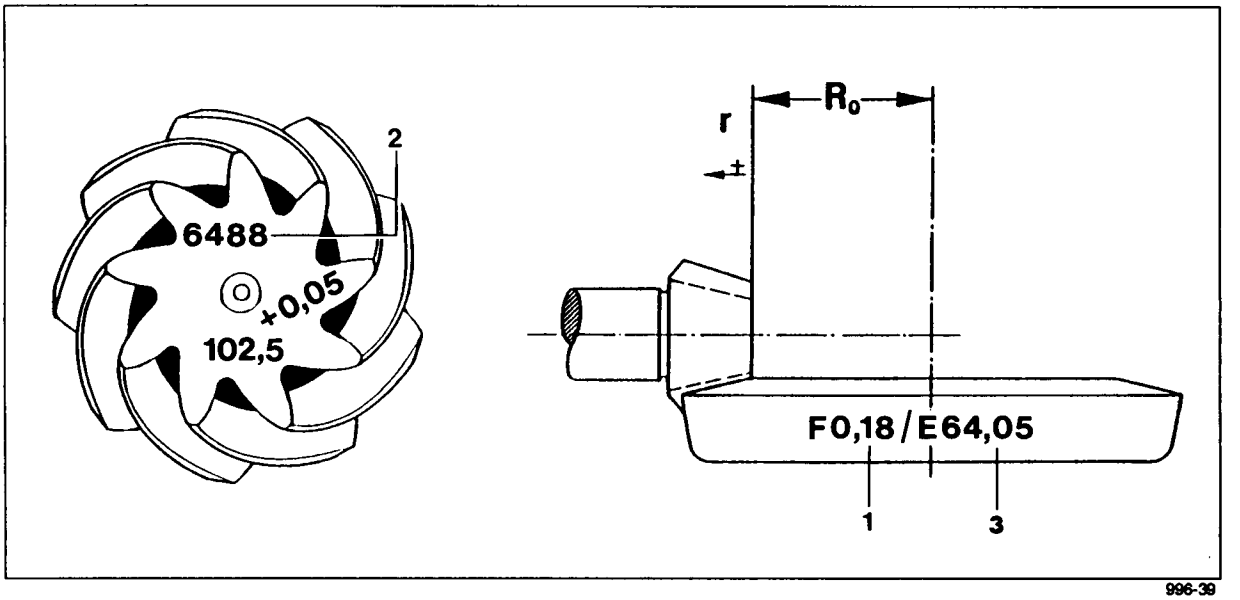

Ro – Design dimension (64.00 mm)
1 – Backlash "F" (e.g. 0.18 mm)
3 – Setting dimension "E" (Ro + r)

r – Deviation r
2 – Matching number

The service versions also feature the production dimensions of version "A". However, they are offset by 180°.

Adjusting drive pinion

Note

The setting dimension "E" is indicated on the ring gear.

1. Install drive pinion **without** shims "S_3" and tighten all pan head screws of bearing assembly to 50 Nm (37 ftlb).

2. Rotate adjustable stop ring along with spindle towards measuring plunger as far as it will go and set second setting ring to dimension"a".

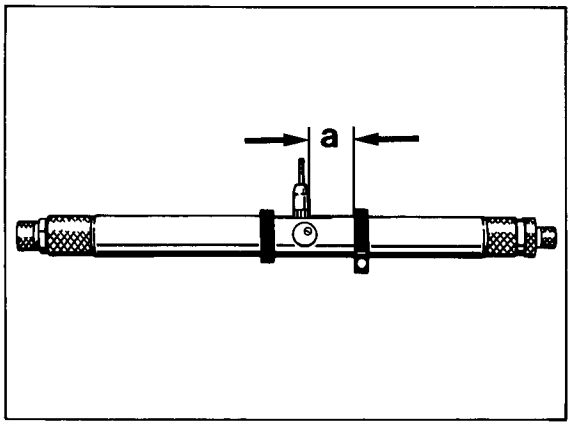

969-39

a = 30 mm

3. Assemble measuring mandrel and set with master gauge **VW 385/30** to setting dimension "E" (64.05 mm in the example).
Set dial gauge (3 mm measuring range) to zero with 1 mm preload.

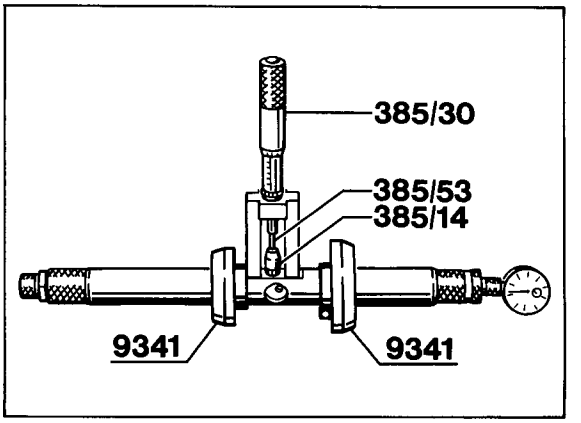

970-39

4. Put gauge block plate **9281** on drive pinion head and insert measuring mandrel with dial gauge towards transmission side cover into transmission case. Dial gauge extension points towards center of drive pinion.

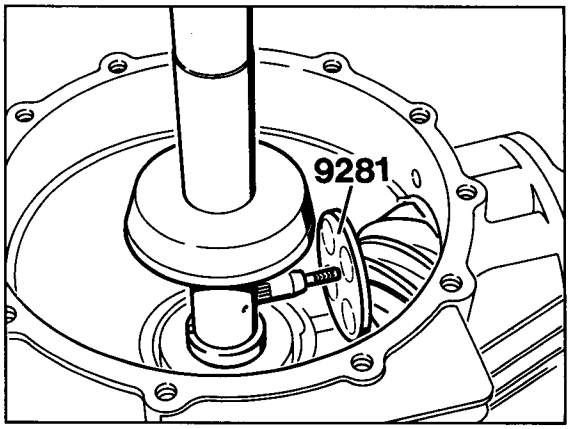

971-39

5. Fit transmission side cover without shaft seal and sealing ring and tighten crosswise with 4 hexagon head bolts.

Note

Do not use a hammer when fitting the transmission side cover (the gauge block plate held by magnets might fall off). Locate cover in correct installation position only by tightening the hexagon head bolts uniformly.

6. Using a socket wrench (24 mm A/F, e.g. Stahlwille No. 10 750), pull adjustable centering disc over spindle towards the outside until the measuring mandrel can just about be turned.

7. Turn measuring mandrel carefully until the dial gauge extension is vertical to the face of the drive pinion head. At this point, the pointer of the dial gauge is at its maximum deflection (reversing point) and the dial gauge must now be read.

Note

The measured value always deviates from the set dimension in clockwise direction (small pointer on the dial gauge is between 1 and 3), i.e. if the dial gauge is set with a preload of 1 mm, the value deviating from 1 is taken as the shim thickness "S_3" to be inserted.
Always round up or down to the nearest 0.05 mm (e.g. 1.63 to 1.60 mm).

8. After inserting the required shims, check the setting value "E" once again. A deviation of ± 0.03 mm is permissible.

Printed in Germany – XXI, 1994

Determining installation position of drive pinion

Measuring actual values

Note

Initial production vehicles used drive sets that did not have the "E" and "F" marks for service adjustment.
When replacing components that affect the drive pinion position directly on those transmissions, the actual values must be measured.

1. Remove differential.

2. Assemble measuring mandrel VW 385/1 and set to design dimension "Ro" = 64.00 mm.
   (Refer to page 39 - 129).

3. Install measuring mandrel and measure difference (deviation "r") to "Ro".

4. Design dimension "Ro" plus deviation "r" equals the actual or setting dimension "E".

5. After the parts have been replaced, adjust the drive pinion, taking the actual value determined into account.

Adjusting ring gear

Determining total shim thickness "Stot." ($S_1 + S_2$)

The ring gear must be readjusted if the transmission case, transmission side cover, taper roller bearing for differential, differential housing or drive set have been replaced.

Note

The drive pinion must be removed in order to determine the preload of the differential tapered roller bearings.

1. Remove adjusting shim "S_1" (in transmission side cover).

2. Adjusting shim "S_2" remains in the transmission case.

3. Make sure that the bearing outer races of the tapered roller bearings are well seated in the transmission case or in the transmission side cover.

4. Insert differential into transmission case and rotate several times.

5. Fit transmission side cover without seals and tighten all hexagon head bolts to **23 Nm (17 ftlb)**.

6. Place gauge block plate **9281** on the collar of the differential.

7. Fasten universal dial gauge holder **VW 387** with dial gauge and extension to the case and set to 0 with 2 mm preload.

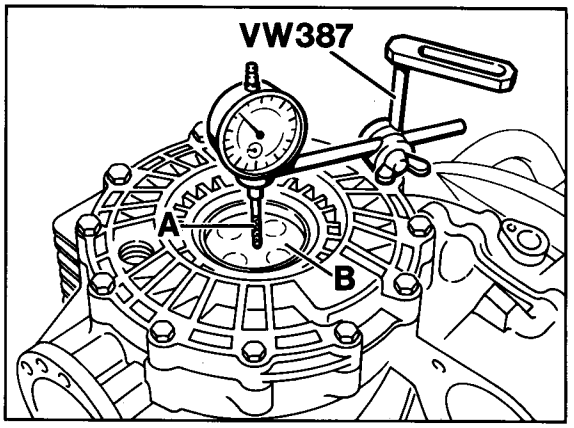

973-39

A - Dial gauge extension (approx. 30 mm long)
B - Gauge block plate 9281

8. Using a suitable tool, move differential up an down.
   Read off backlash on the dial gauge and note.

Note

Do not turn differential while measuring backlash as this will give an incorrect reading.

9. Remove adjusting shim "S_2" and determine thickness using a micrometer.

10. Calculate "Stot".
    "Stot." = Thickness of adjusting shim "S_2"
    + measured value
    + pressure fit of taper roller bearings

Example

Thickness of adj. shim "S_2"	1.70 mm
Measured value	0.91 mm
Press fit (constant value)	0.24 mm
"Stot"	2.85 mm

11. Spread calculated shim thickness "Stot" as follows.
    To start with the backlash adjustment, the thickness of adjusting shim "S_1" is reduced by 0.40 mm while the thickness of adjusting shim "S_2" is increased by 0.40 mm.

Example

Total shim thickness of adjusting shims

$S_1 + S_2 = 2.85$ mm

Thickness of adjusting shim "S_1"

$$\frac{2.85 \text{ mm}}{2} = 1.425 \text{ mm} - 0.40 \text{ mm} = 1.025 \text{ mm}$$

Thickness of adjusting shim "S_2"

$$\frac{2.85 \text{ mm}}{2} = 1.425 \text{ mm} + 0.40 \text{ mm} = 1.825 \text{ mm}$$

Note

The adjusting shims are avail. in thickneses of 1.0...2.0 mm in increments of 0.05 mm.

The shim tichknesses calculated must be rounded up or down for plausible dimensions that will not alter the total shim thickness S_1 and S_2.

Example

Calculated shim thickness

$S_1 + S_2 = 1.025 + 1.825 = 2.85$ mm

Rounded down shim thickness

$S_1 + S_2 = 1.00 + 1.85 = 2.85$ mm

Adjusting circumferential backlash

Note

The backlash to be set is embossed on the ring gear.

1. Mount gear set using the shims "S_3" determined while adjusting the drive pinion and tighten all mounting screws to 50 Nm (37 ftlb).

Note

Make sure the collar nut of the drive pinion is tightened to 250 Nm (184 ftlb).

2. Fit the adjusting shims (S_1 + S_2) determined into the transmission case and the transmission side cover, respectively.

3. Fit differential and transmission side cover and tighten all hexagon head bolts of the cover to 23 Nm (17 ftlb).

Note

Always make sure that there is a certain amount of backlash when tightening the hex bolts. Never allow the drive pinion to bind.

4. Assemble measuring lever **VW 388** and adjusting device **VW 521/4** and adjust lever length to 80 mm with the plunger. Refer to dimension "a" in the picture.

5. Insert adjusting device with clamping sleeve (Special Tool 9145) into the differential and clamp firmly.

6. Rotate differential in both directions several times to settle the tapered roller bearings.

7. Fit universal dial gauge holder with flat extension in such a way as to produce a right angle between dial gauge axis and lever.

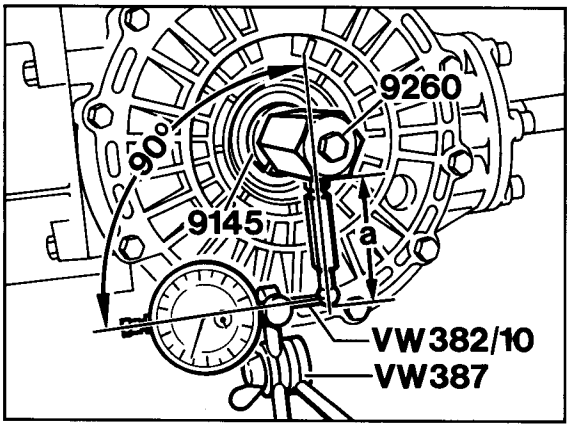

972-39

Dimension "a" = approx. 80 mm

8. Turn ring gear carefully at the clamping screw of the adjusting device up to the stop and set the dial gauge to zero. Turn back ring gear and read off circumferential backlash. Note the reading.

Note

When carrying out measurements, the drive pinion must be blocked with Special Tool **9339**.

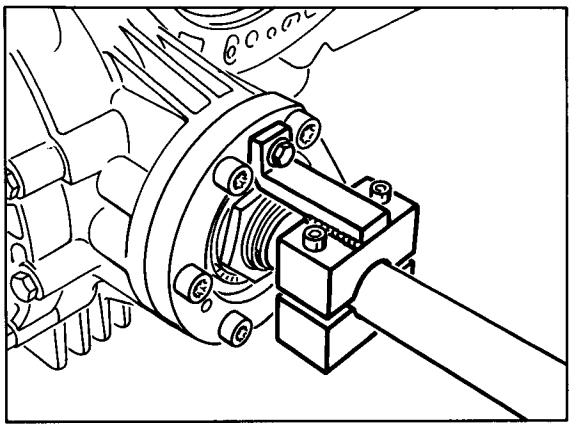

1129-39

9. After turning the ring gear a further 90° each, repeat measuring procedures three times. The measured values must not deviate from one another by more than 0.05 mm.

Note

The backlash to be adjusted is embossed on the ring gear. The actual value may be less than the specified value by - 0.05 mm. Under no circumstances must the backlash be greater than the specified value.

10. If the required backlash cannot be obtained, replace spacers (S1 + S2) again. The total shim thickness (S tot.) must not be altered, however.

Note

Changing the shim thickness of "S1" or "S2" by 0.05 mm shim results in a change of backlash by approx. 0.1 mm.

Printed in Germany – XV, 1992

Tiptronic Diagnosis / Troubleshooting

911 Carrera 2

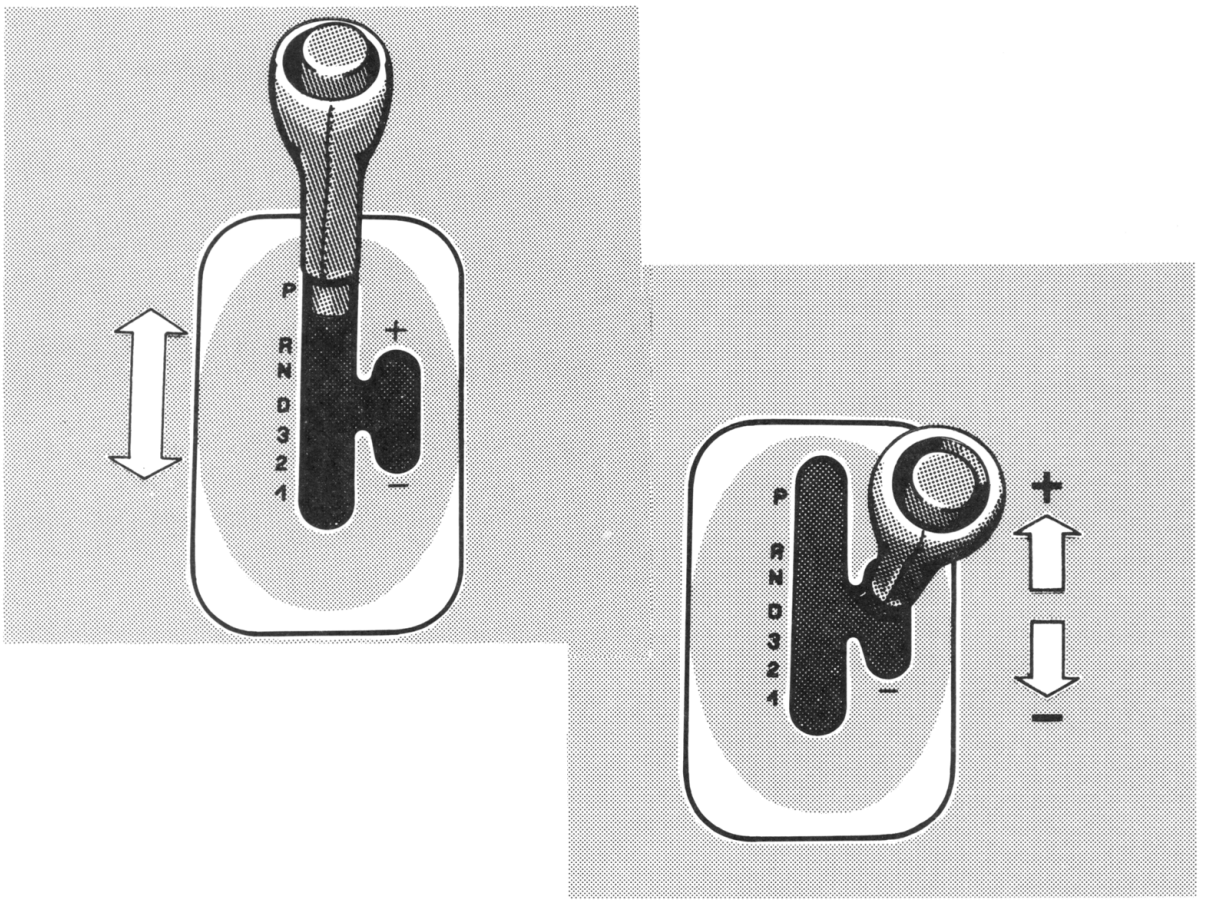

Dr. Ing. h.c. F. Porsche Aktiengesellschaft

Fault overview / Contents

Test point	Fault code	Item	Results of fault	Page
		General		102
		Connector layout		110
0		Diagnosis connector		111
1	11	Voltage control unit (Term. 15)	Emergency operation, no display	112
2	12	Supply voltage (Term. 30)	No diagnosis	113
3	13	Supply voltage, drive links	Emergency operation	113
4	14	Supply voltage, sensor, 5 V	Emergency operation	114
5	21	Rpm signal (engine)	Emergency operation	115
6	22	Load signal	Emergency operation	116
7	23	Throttle potentiometer	Emergency operation	117
8	24	Change of ignition timing	Emergency operation	118
9	31	Soleonid valve 1	Emergency operation	119
10	32	Solenoid valve 2	Emergency operation	119
11	33	Solenoid valve (torque conv. clutch)	Emergency operation	120
12	34	Pressure regulator	Emergency operation	120
13	35	Selector lever switch	Emergency operation	121
14	36	Speed sensor (transmission)	Emergency operation	123
15	37	Transmission temperature sensor	Replacement value 60° C	124
16	38	Selector lever switch (for starting)	Emergency operation	125
17	42	Control unit faulty	Emergency operation	125
18	43	Control unit faulty	Emergency operation	125
19	44	Control unit faulty	Emergency operation	126
20	45	Downshift fault	Emergency operation	126
21	46	Rev. limiter	Emergency operation	126
22	51	Manual program switch	No manual program	126
23	52	Tip-switch up/down shifting	No manual program	126
24	53	Kickdown switch	No kickdown	127
25	54	Transverse acceleration sensor	No upshift prevention	127
26	55	Speed signal 1 (ABS)	No upshift prevention no manual program	128
27	56	Combi-instrument input	No diagnosis	128
28	57	Oil cooler blower (not used at pres.)	Fault memory	129
29	59	Switch R-position (as of N prog.)	Emergency operation	129
30	60	Reverse light relay (as of N prog.)	no diagnosis	130

Printed in Germany, XIX – 1993

Functional Overview
This is how the information is processed in the Tiptronic control unit

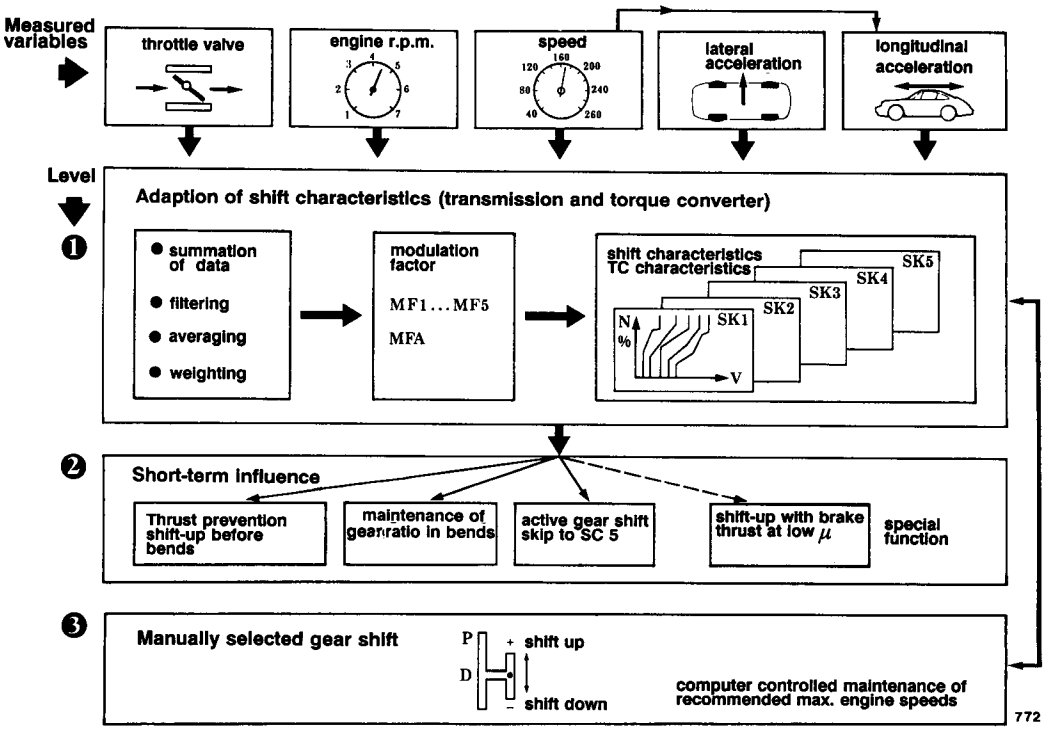

The Tiptronic control unit is located below the left-hand seat and is built into a housing that is slightly smaller than the DME control unit located in the same place.

The following parameters are constantly supplied to the Tiptronic control unit:

Parameter	Type of measurement
• Throttle position	Potentiometer resistance
• Throttle actuation speed	Time for change of resistance at potentiometer
• Engine speed	Frequency measurement (from DME)
• Driving speed	No. of pulses at pole wheel of transmission shaft
• Vehicle transverse acceleration	Signal from transverse acceleration sensor on center console
• Vehicle axial acceleration/deceleration	Change of no. of pulses within clock time

The above values are determined several times per second and are processed in the control unit.

By comparing those measurements with the stored programs, factors are generated that cause the transmission to enter or to shift into one of the five shift curves.

The automatic shift strategy of the Porsche Tiptronic

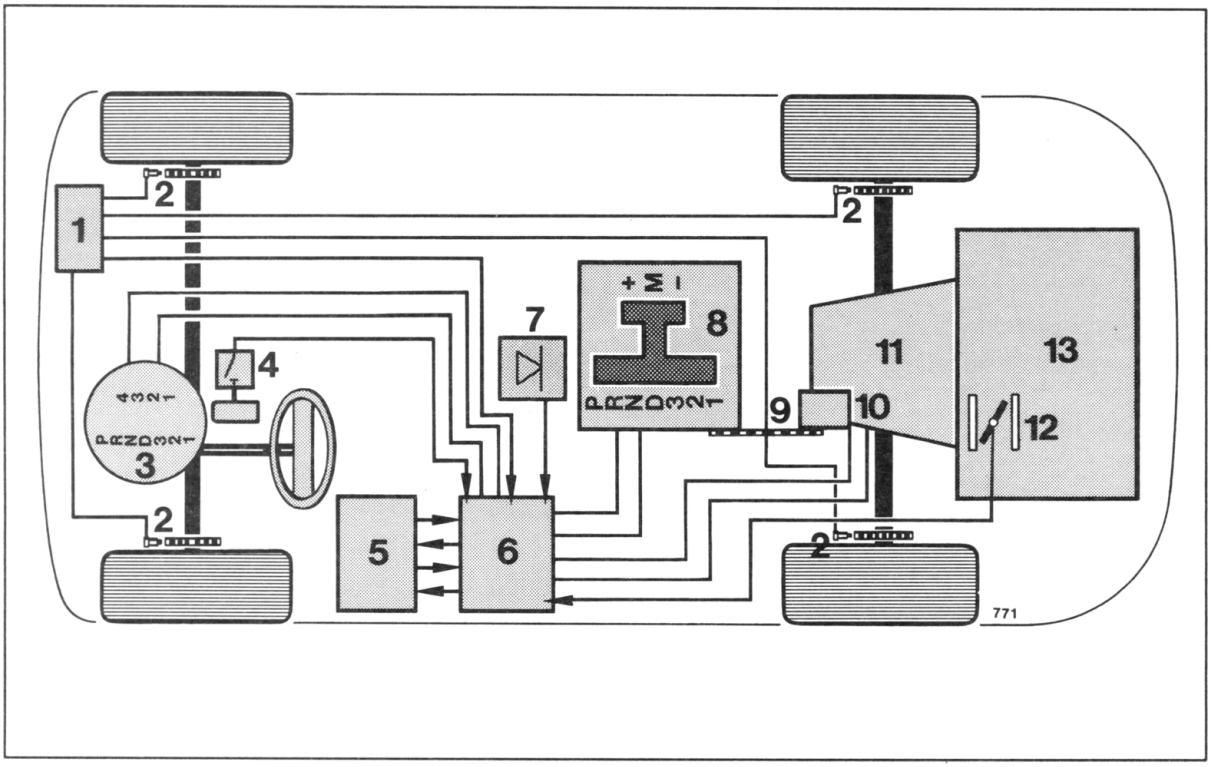

1 ABS control unit
2 ABS sensors at wheels
3 Speedometer
4 Kickdown switch
5 DME control unit
6 Electronic Tiptronic control unit
7 Transverse acceleration sensor
8 Selector lever system with two gates
9 Cable
10 Position switch
11 Automatic transmission
12 Throttle with potentiometer
13 911 Carrera 2 engine

The electronic Tiptronic control unit (6) is the information and command center of the entire system. A large quantity of **information inputs** that are compared with the stored **driving or gearshift programs** is used to generate **commands** that **cause the transmission** to **execute** or **not to execute** gearshifts.

Printed in Germany, XIX - 1993

Major Data at a Glance:

Automatic four-speed sports transmission with integral hypoid final drive, with manual and automatic shift features.

No. of gears: 4 forward gears, 1 reverse

		WW → '91	RoW 92 →	US 92 →
Porsche model designation:		A 50.01	A 50.02	A 50.03
Ratios	1st gear	i = 2.479	-.-	-.-
	2nd gear	i = 1.479	-.-	-.-
	3rd gear	i = 1.000	-.-	-.-
	4th gear	i = 0.728	-.-	-.-
Spur gear drive 30 : 33		i = 1.100	-.-	-.-
Final drive Hypoid offset 15 mm		i = 3.667	3.667	3.556

Stall speed 2,300 rpm – 400 rpm

Control unit: 8-bit microprocessor with external 32 KB EPROM memory

Transmission unit overall weight: 98 kg
Extra weight: 911 Carrera 2 vehicle with Tiptronic: 34 kg

Filling capacities:

Automatic section: Initial filling approx. 9.1 l, ATF Dexron II D
This quantity is reduced accordingly when ATF fluid is changed

Final drive: 0.9 l transmission oil GL5 (MIL L 2105B)
either multigrade SAE 75 W 90
or single grade SAE 90

Start of diagnosis

To assess a Tiptronic transmission for which complaints have been received, the information about the fault and the fault occurrence should be as complete as possible.
To avoid extra damage during test drives or faulty diagnosis results, the following items must be checked and corrected (if required) prior to the test drive:

1. Read out fault memory with System Tester 9288 and correct fault.
   Battery, connectors, ground points O.K.
2. External damage, leaks at transmission (ATF leaks) or final drive (hypoid oil loss), disconnected cables.
3. ATF level in transmission correct, fluid is **neither dirty nor does it leave a burning smell.** If ATF is dirty or if it leaves a burning smell, it is recommended to replace the Tiptronic transmission if complete removal of the dirt residues cannot be ensured. In addition, the coolant lines and the cooler must be flushed.
4. Engine operation, full opening of throttle when accelerator is in full-throttle position

Notes:
If a system fault occurs, the Tiptronic system shifts into a reduced driving program. The warning lamp comes on and the automatic system shifts to 4th gear, irrespective of the selector lever position.
If the vehicle is started again in the "P" or "N" selector lever position after it has been stopped, only 3rd gear is activated in the "D", 3, 2 or 1 selector lever positions.
Caution: The reverse gear interlock monitor is inoperative.
Do not shift into "R" while the vehicle is in motion.

The test drive

The test drive should be used to check if the customer complaint situations actually occur when the vehicle is driven. It is actually preferrable to have the customer drive the car and to check for any potential faults, malfunctions or even for incorrect operation by the driver.

Check all functions of the transmission during the test drive:
— All shifts, including in kickdown position in the automatic gate, as well as shifts in the manual gate
— Various driving speeds
— Driving in reverse (uphill if possible)
— Stall speed

A safe diagnosis is only possible if you are familiar with the design and operation of the Tiptronic transmission. Read the Functional Description brochure carefully: Porsche Tiptronic WKD 496 620.

Make your diagnosis using the "Troubleshooting the Tiptronic transmission" section and determine the type of repair required.

Printed in Germany, XIX - 1993

This diagnosis plan is based on the fault memory contents. If no fault is stored although a malfunction is present, the troubleshooting plan for the mechanical/hydraulic section should be used.

Troubleshooting requires that the person performing the tests

- is familiar with the location of components, operation and technical relationships of the systems being tested (refer to Model Information)
- is able to read and evaluate Porsche wiring diagrams
- knows the functions of circuits and relays
- is capable of using testers such as oscilloscope, voltmeter, ohmmeter and ammeter, as well as of evaluating the test results.

Important:

The fault text displayed (fault list in case of flashing code) does **not** necessarily indicate a defect in this component, but may also refer to a fault in the corresponding control unit and the wiring (paths) between the component and the control unit.

Before reading out the fault memory, do not try to locate faults by disconnecting plugs etc. while the engine is running as this may be stored as a fault in the fault memory.

Note for System Tester 9288

If the tester display shows

Fault not present, this may indicate:

- Fault did not exist at the time of testing (e.g. in the case of loose connections)
  Remedy: Visual inspection of path
- The conditions under which the fault is tested do not correspond to the conditions under which the fault occurred.
  Remedy: Conform with the conditions displayed on the tester

Signal unplausible:

The signal of the monitored component is not within the tolerance range of the value preset in the control unit.

Printed in Germany, XIX - 1993

Diagnosable Tiptronic control unit

A self-diagnosis feature with fault memory is built into the Tiptronic control unit to allow certain faults within the electronic control system of the Tiptronic to be detected and to be stored.

To prevent detected and stored faults from being erased when the ingition is switched off, a permanent positive voltage is present at the control unit. Detected faults remain stored in the fault memory for at least 50 starts of the engine.

Caution:

If the connector is pulled off the Tiptronic control unit or if the battery is disconnected, the fault memory is erased.

Tester connections

To run the diagnosis, the vehicles are fitted with a 19-pin connector in the passenger footwell.

This connector allows System Tester 9288 or the Flashing Code Tester 9268 (via adapter cable 9268/2) to be connected. Operation of the testers is described in the tester instruction manuals.

Note

The relevant test point is complemented by the corresponding fault flasher code of Tester 9268.
As of tester module level 4.0, the following items can be checked or read out with System Tester 9288:

Input signals with „Input signals“ menu	**Actual values with „Actual values“ menu**	**Actuators (Drive links) with „Drive links“ menu**
Kickdown	Rpm	Solenoid valve 1
Downshift	Speed 1	Solenoid valve 2
Upshift	Speed 2	Torque converter clutch
Manual program	Injection time	Gear indicator 1 - 4
Selector lever	Throttle	Reverse relay (G 01)
	Temperature	Ignition timing change
	Transverse acceleration	
	Selector lever switch	
	Gear	
	Voltage supply	
	Version coding	

Printed in Germany, XXII - 1994

General

Auxiliary tools

Use of the following auxiliary tools is recommended when checking the Electronic Transmission Control (EGS - **E**lektronische **G**etriebe **S**teuerung):

- Diagnosis Tester 9288 with connection cable
- Voltage and resistance meter for internal resistance > 10 MΩ
- Oscilloscope
- Jump lead with matching spade connectors

General information

- Do not run resistance measurements on live wiring
- If poor terminal connections are found,
  - check wiring for damage
  - check connector terminals for tight fit, tight wire connections, deformation and corrosion
  - Before replacing the transmission or the electronic control unit, always check the wiring harness and system components with the System Tester. Otherwise new new control unit or transmission may be destroyed again.

  Abbreviations:

  TE = Transmission electronics= – System components
  ECU = Electronic transmission control unit
  HCU = Hydraulic transmission control unit

Signals that can be checked with the oscilloscope

- Speed signal (from ABS)
- Speed signal (from transmission)
- Rpm signal (n-Mot) (from DME)
- ti signal (load of DME)

Definitions

System voltage

The system voltage reflects the current charging state of the battery. When the battery is discharged, the voltage is approx. 11 V; when the engine is running it is approx. 14.5 V

Needle pulse

Needle pulses are pulses of extremely short duration that appear as a vertical line on the oscilloscope (tr signal)

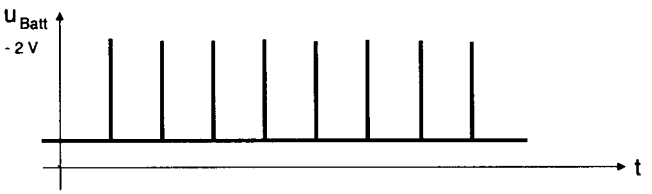

Printed in Germany, XIX – 1993

Unit functions
Installed units must operate correctly within a voltage range of 9.5 to 16.8 Volts.

Faults that cannot be detected by self-diagnosis

The ECU cannot detect and store all potential faults.

If a fault is found and if no fault has been stored, the tester may be used to run a system check to indicate any faults that may be present.

Some of these faults are stated below.

- No diagnosis possible, Test point 0
  No diagnosis is possible if the diagnostic leads are faulty.
- Terminal 15, Test point 1
  If terminal 15 is inoperative, the system enters the (mechanical-hydraulic) emergency mode. The fault lamp does not come on.
- Terminal 30, Test point 2
  If terminal 30 is inoperative, all faults that may have been stored are erased after the ignition is switched off.
- DME rpm signal is missing. Test point 2: Actual values, connector to DME.
- Tiptronic is in emergency mode, warning lamp comes on. No Tiptronic diagnosis possible.
  If all above items are o.k.: Replace ECU
- Transmission oil level o.k.?
- Start interlock feature
  It must only be possible to start the engine in the P and N selector lever positions. Check selector lever switch to ignition switch cable.
- Several faults
  If several faults occur, this may be due to a missing ground lead (e.g. the common ground lead of the sensors at ECU pin 44), ground of body engine/transmission.
- Gear selected
  If the gear selection feature is faulty, the position switch should be checked (Test point 13).

Printed in Germany, XIX – 1993

Connector layout for diagnosis

Printed in Germany, XIX – 1993

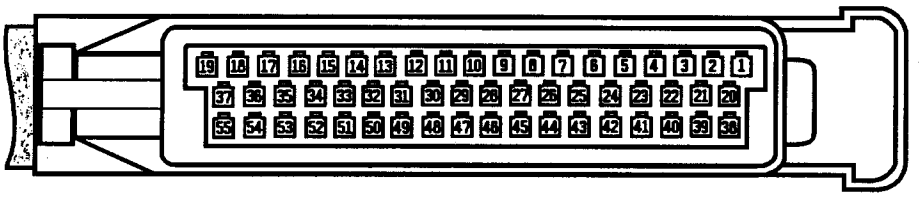

Figs. 1 and 2 Tiptronic or DME control unit

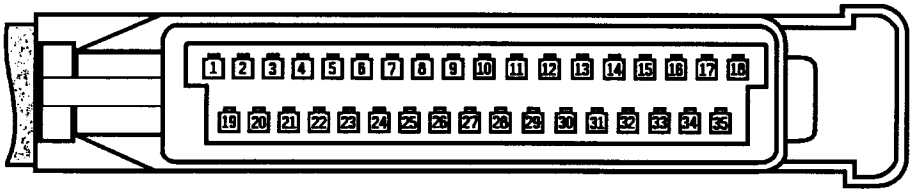

Fig. 3 ABS control unit

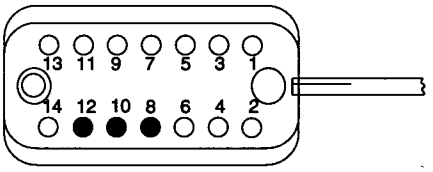

Fig. 4 T 16

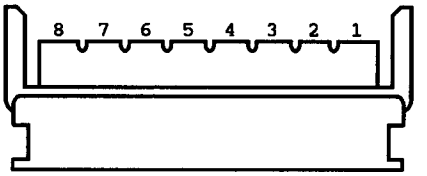

Fig. 8 Selector lever connector

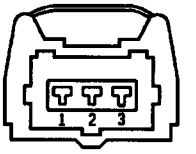

Fig. 11 Transversal acceleration sensor

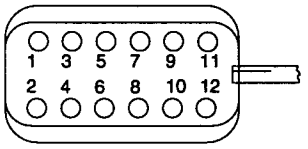

Fig. 5 T41

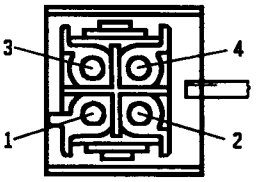

Fig. 12 Kickdown switch

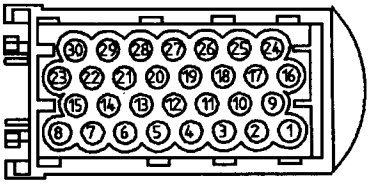

Fig. 6 T 40

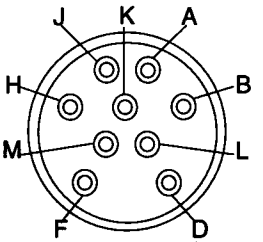

Fig. 9 Transmission connector

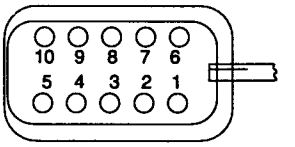

Fig. 13 T 13

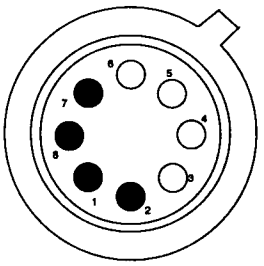

Fig. 7 Position switch

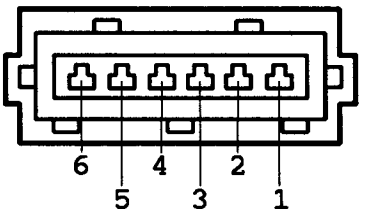

Fig. 10 Throttle potentiometer

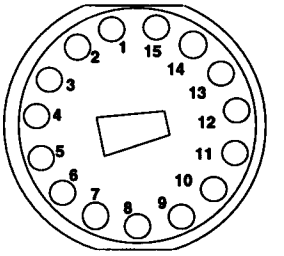

Fig. 14 Speedometer

Fault, Fault code	Possible Causes, Elimination, Remarks

Test point 0

K and L wire

The diagnostic connection between the ECU control unit and the tester is made across the K and L wires.

If it is not possible to run a diagnosis on all systems, the following checks should be made:

1) Continuity check (refer to wiring diagram)

- L wire: Pin 7 (diagnosis socket) to Pin 13 (ECU connector)
- K wire: Pin 8 (diagnosis socket) to Pin 51 (ECU connector)

2) Short to ground check (refer to wiring diagram)
- L wire: The voltage at pin 7 (diagnosis socket) should be > 8 V when the ignition is switched on.
- K wire: The voltage at pin 8 (diagnosis socket) should be > 8 V when the ignition is switched on.

Possible cause:

- Short to ground or open circuit on the wiring or connectors.
- A defective control unit connected to those wires. (May be any diagnosable control unit, must not necessarily be the ECU control unit.)

  To determine the faulty control unit, pull off the control unit connectors one after another until a voltage of > 8 V is present.

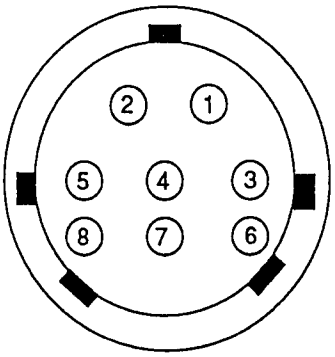

Bushing 3 = L wire

Bushing 4 = Ground

Bushing 5 = Terminal 15

Bushing 7 = K wire

See also page 03 - 43.

Printed in Germany - XXII, 1994

Fault, Fault code	Possible Causes, Elimination, Remarks
Test point 1 **Voltage control unit** (Fault code 11 Signal unplausible)	**Emergency operation, no display.** Possible faults: Open circuit, short to positive, short to ground, loose connection, voltage outside of valid range 1) Tiptronic warning lamp does not light when the ignition is switched on Check fuse (Central Electrical System) Measure voltage at fuse – No voltage, check wiring to DME relay or operation of DME relay, respectively Measure voltage at ECU connector pin 1 No voltage: Check wiring according to wiring diagram 2) Voltage outside of valid range Fault code 11 Signal unplausible – Low voltage? U < 11 V Check battery, generator, regulator! – O.k.? Check for contact resistance at junctions, deformations and corrosion of contacts – Excessive voltage? Check power supply of vehicle (generator, regulator) U > 14.5 V with engine running Fig. 1

Printed in Germany, XIX – 1993

Fault, Fault code	Possible Causes, Elimination, Remarks
Test point 2 **Permanent positive (system voltage)**	**No diagnosis possible.** Possible faults: Open circuit, short to ground, loose connection **Note:** – **No fault storage** (Faults are lost when ignition is switched off) – Open circuit/short to ground: Check fuse (Central Electrical System) – Fuse faulty: Pull off connector at ECU Check pin 39 for short to ground – Short to ground? Check wiring according to wiring diagram – No short to ground: ECU faulty Fuse o.k.: Check voltage according to wiring diagram Fig. 1
Test point 3 **Voltage of drive links** Fault code 13	**Tiptronic warning lamp comes on, transmission is in emergency mode.** Possible faults: Transmission relay in control unit cannot be pick up or drop out Pull off transmission connector. Measure voltage at pin M. (System voltage) 1) No voltage: Pull off ECU connector. Check wiring from ECU pin 19 to transmission connector pin M Wiring o.k.: ECU faulty 2) Voltage cannot be switched off: Fault lamp does not come on when fault occurs (e.g. connector pulled off at throttle potentiometer) Pull off ECU connector No voltage at pin M: ECU faulty Voltage at pin M: Short to positive within wiring (transmission → ECU) Figs. 1, 9

Printed in Germany, XIX – 1993

Fault, Fault code	Possible Causes, Elimination, Remarks
Test point 4 **Voltage of sensors** Fault code 14	**Tiptronic warning lamp comes on, transmission in emergency mode.** Possible faults: Open circuit, short to ground, short to positive Pull connector off ECU. Ignition „off" **Transverse acceleration sensor** Open up junction T 41. Check wiring from ECU pin 45 to transverse acceleration sensor pin 3 for continuity. Check transverse acceleration sensor pin 3 to pin 7 ECU (ground) and pin 1 ECU (15) for short to ground / short to positive. **Throttle potentiometer** Open up junction T 40. Check wiring from ECU pin 45 to throttle potentiometer pin 1 for continuity and measure short to ground / short to positive at pin 7 ECU (ground) and pin 1 ECU (terminal 15). Check return line of sensor supply voltage from T 41 pin 3 to ECU pin 27 (M prog.) or pin 8 (as of N prog.). Wiring connections o.k.? ESG faulty Sensor supply voltage 5 V ± 0.5 V Figs. 1, 5, 6, 10, 11

Printed in Germany, XIX – 1993

Fault, Fault code	Possible Causes, Elimination, Remarks
Test point 5 **Rpm signal from DME** Fault code 21	**Tiptronic warning lamp comes on, transmission is in emergency mode.** Possible faults: Open circuit/short to ground, short to positive, loose connection 1) Signal check Check signal with Tester 9288. (Engine operation) Check signal with oscilloscope at ECU connector pin 3. If signal is o.k.: ECU faulty Signal shape of tr signal (refer to page 108) 2) Open circuit, short to ground, short to positive Check wiring according to wiring diagram. ECU connector pin 3 to DME connector pin 3 (ground at ECU connector pin 7, positive at ECU connector pin 1) Wiring connections o.k.: DME control unit faulty **Note:** If pin 3 of the DME control unit is shorted to ground, the DME relay cannot drop out and the fuel pump will run on even when the engine is switched off. This is also the case if a short to ground is found in the wirings to the ECU.

Printed in Germany, XIX – 1993

Fault, Fault code	Possible Causes, Elimination, Remarks
Test point 6 **Load signal from DME** Fault code 22	**Tiptronic warning lamp comes on, transmission is in emergency mode.** Possible faults: Open circuit, short to ground, short to positive, loose connection 1) Signal check – Check signal with Tester 9288 (injection time) with the engine running – Check signal at ECU connector pin 21 using an oscilloscope. If signal is o.k.: ECU faulty Signal shape of ti signal (refer to page 108) 2) Open circuit, short to ground, short to positive Check wiring. ECU connector pin 21 to DME connector pin 3 (ground at ECU connector pin 7, positive at ECU connector pin 1) Connections o.k.: Check connection from T 16 to rev counter Connections o.k.: DME control unit faulty Figs. 1, 4

Printed in Germany, XIX – 1993

Fault, Fault code	Possible Causes, Elimination, Remarks
Test point 7 **Throttle potentiometer** Fault code 23	**Tiptronic warning lamp comes on, transmission is in emergency mode.** Detectable faults: Open circuit/short to ground, short to positive 1) Check throttle potentiometer with Tester 9288 (Actual values 100 % – 5 %) 2) Pull connector off ECU. Measure resistance between pin 44 and pin 8 (M prog.) or pin 27 (as of N prog.). – Messurement between approx. 0.5 and approx. 4 kΩ with throttle position between idle and full load. – Measurement o.k.: Check ground at ECU connector pin 7 – Check wiring of potentiometer pin 5 to ECU pin 44 O.k.: ECU faulty 3) Repeat resistance measurement at potentiometer (between pin 2 and pin 3). – Incorrect measurements: Potentiometer faulty 4) Check wiring (Throttle potentiometer pin 4 to ECU pin 8 (M prog.) or pin 27 (as of N prog.) – Insert ECU connector. – Check ground at throttle potentiometer connector pin 2. – No ground: Check wiring (Throttle potentiometer pin 5 to ECU pin 44) Figs. 1, 10

Printed in Germany, XIX – 1993

Fault, Fault code	Possible Causes, Elimination, Remarks

Test point 8

Change of ignition timing
Fault code 24

Tiptronic warning lamp comes on, transmission is in emergency mode.
Possible faults: Open circuit, short to ground, short to positive

1) Check operation with Tester 9288 (drive link test)

- Idle speed drops during test.
- Check coding plug at DME

2) Check voltage drop

- Remove cover from plugged-in connector T41.
- Switch on ignition
- Measure voltage at pin 8. Nominal value approx. 5 volts
- Trigger signal with Tester. Voltage must drop.
- Operation o.k.: Check wiring to DME control unit (T 41 pin 8 to DME control unit pin 51).
- Wiring o.k.: DME control unit faulty
- Operation not o.k.: Check wiring to ECU (T 41 pin 8 to ECU pin 32).
- Wiring o.k.: ECU faulty

Note: Check engine-to-body ground strap

Figs. 1, 2, 5

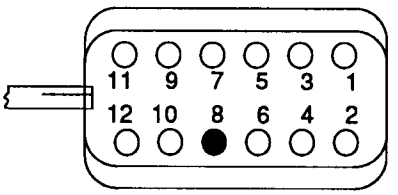

Printed in Germany, XIX – 1993

Fault, Fault code	Possible Causes, Elimination, Remarks
Test point 9 **Solenoid valve 1** **Fault code 31**	**Tiptronic warning lamp comes on, transmission is in emergency mode.** Possible faults: Open circuit, short to ground, short to positive 1) Check operation with Tester 9288 (drive link test) – Acoustical test Triggering cycle of valves is audible as a clicking noise near the transmission. 2) Pull connector off ECU. a) Measure resistance between pin 5 and pin 19. Nominal value 34 Ohms, tolerance 10 % b) Check that pins 5 and 19 are free from shorts to ground. – Check o.k.: ECU faulty 3) Also pull off connector at transmission. – Check wiring (ECU connector pin 5 to transmission connector pin H and ECU connector pin 19 to transmission connector pin M). – Wiring o.k.: Transmission faulty, refer to mechanical section Figs. 1, 9 Note: If a „sporadic solenoid fault" occurs, check connections for pushed-back PINS.
Test point 10 **Solenoid valve 2** **Fault code 32**	**Tiptronic warning lamp comes on, transmission is in emergency mode.** Possible faults: Open circuit, short to ground, short to positive 1) Check operation with Tester 9288 (drive link test) – Acoustical check Triggering cycle of valves is audible as a clicking noise near the transmission. 2) Pull connector off ECU a) Measure resistance between pin 24 and pin 19. Nominal value 34 Ohms, tolerance 10 % b) Check that pins 24 and 19 are free from shorts to ground. – Check o.k.: ECU faulty 3) Also disconnect connector from transmission. – Check wiring (ECU connector pin 24 to transmission connector pin K and ECU connector pin 19 to transmission connector pin M). – Wiring o.k.: Transission fault, refer to mechanical section Figs. 1, 9

Printed in Germany, XIX – 1993

Fault, Fault code	Possible Causes, Elimination, Remarks
Test point 11 **Solenoid valve torque conv. clutch** Fault code 33	**Tiptronic warning lamp comes on, transmission is in emergency mode.** Possible faults: Open circuit, short to ground, short to positive 1) Check operation with Tester 9288 (drive link test) – Acoustical check Triggering cycle of valves is audible as a clicking noise near the transmission. 2) Pull connector off ECU. a) Measure resistance between pin 42 and pin 19. Nominal value 34 Ohms, tolerance 10 %. b) Check that pins 42 and 19 are free from shorts to ground. – Check o.k.: ECU faulty 3) Also pull off connector at transmission. – Check wiring (ECU connector pin 42 to transmission connector pin L and ECU connector pin 19 to transmission connector pin M). – Wiring o.k.: Transmission fault, refer to mechanical section Figs. 1, 9
Test point 12 **Pressure regulator** Fault code 34	**Tiptronic warning lamp comes on, transmission is in emergency mode.** Possible faults: Open circuit, short to ground, short to positive 1) Pull connector off ECU a) Measure resistance between pin 6 and pin 19. Nominal value 6 Ohms ± 2 Ohms b) Check pins 6 und 19 for freedom from shorts to ground. – Check o.k.: ECU faulty 2) Also pull off connector at transmission. – Check wiring (ECU connector pin 6 to transmission connector pin B and ECU connector pin 19 to transmission connector pin M). – Wiring o.k.: Transmission fault, refer to mechanical section Figs. 1, 9

Fault, Fault code	Possible Causes, Elimination, Remarks

Test point 13

Selector lever switch/transmission
Fault code 35

Tiptronic warning lamp comes on, transmission is in emergency mode.
Possible faults: Open circuit, short to ground, short to positive

1) Check operation with Tester 9288

Adjustment of Tester 9288:
Menu: „Input signals" = Selector lever/manual program

Shift through selector lever positions P, R, N, D, 3, 2, 1 one after another.

Compare: Selector lever position
Position indicator in speedometer
Position indicator on Tester 9288

Caution:

Due to its design, the display on Tester 9288 appears with a certain delay - shift through positions sufficiently slowly.

No match: Check wiring according to wiring diagram, check position switch with/without wiring

2) Disconnect ECU control unit connector, with the ignition turned off

– Open up junction T 40

Figs. 1, 6

– Check ECU connector pin 26 for ground, using an ohmmeter
– If no ground is present, refer to wiring diagram distributing point 1 and GP V

Printed in Germany, XIX – 1993

Fault, Fault code | **Possible Causes, Elimination, Remarks**

3) Measure position switch according to table 1

Ohmmeter display
– = no continuity
0 = continuity

Table 1

	Pin 14	Pin 33	Pin 50	(N prog.) Pin 41 → to ground
P	–	–	0	0
R	0	–	0	0
N	0	–	–	–/0
D	0	0	–	–
3	0	0	0	–
2	–	0	0	–
1	–	0	–	–

- Measurements o.k. Control unit faulty
- Measurements present but wrong sequence?
- Check connection cable from selector lever switch to position switch
- Connection cable adjusted correctly?
- Repair instruction: "Adjust position switch"
- Open circuit, short to ground, short to positive?

4) Check position switch without connections
- Disconnect connector from position switch
- Check switch for continuity (Table 2)

Fig. 7

Ohmmeter display
– = no continuity
0 = continuity

Table 2

Pin	4-1	4-2	4-3	5-6	7-8
P	–	–	0	0	0
R	0	–	0	–	0
N	0	–	–	0	–/0
D	0	0	–	–	–
3	0	0	0	–	–
2	–	0	0	–	–
1	–	0	–	–	–

- Fault? Replace position switch
- No fault: Check wirings from position switch to T 40, T 41

Fault, Fault code	Possible Causes, Elimination, Remarks
Test point 14 **Speed sensor** (transmission) The sensor transmits the transmission speed. ECU compares it to the wheel speed. Fault code 36	**Tiptronic warning lamp comes on, transmission is in emergency mode.** Possible faults: Open circuit, short to ground, short to positive, loose connection **Note:** Check with Tester 9288 (actual values). Store fault as of engine speed = 2800 rpm 1) Pull connector off ECU a) Measure resistance between pin 2 and pin 38. Nominal value approx. 350 Ohms b) Check that pin 2 und pin 38 are free from shorts to ground. – Check o.k.: ECU faulty 2) Also pull off connector from transmission. Check for continuity at ECU connector pin 2 to pin A Pin 38 to pin F Short to ground pin 2 und pin 38 to pin 7 (ground) Pin 2 und pin 38 to pin 20 (screening) Short to positive pin 2 und pin 38 to pin 1 (positive) **Note:** If it is to be assumed that intermittent faults linked to the output speed occur, the screening connection at pin 20 should be checked after opening the connector housing. Wiring o.k.: Check sensor and wiring in transmission Possible transmission faults: Oil strainer clogged, air intake if oil starvation occurs etc., power transmission interrupted. Figs. 1, 9

Printed in Germany, XIX – 1993

Fault, Fault code	Possible Causes, Elimination, Remarks
Test point 15 **Transmission temperature sensor** Fault code 37	**If a fault occurs, a replacement value = 60° C is assumed.** Possible faults: Open circuit, short to ground, short to positive, corrupted signal **Note:** Existing faults are stored only when the engine is running. 1) Check temperature with Tester 9288 (actual values) 2) Pull connector off ECU Check resistance between pin 46 and pin 44 Nominal value approx. 1.00 kΩ/20° C 1.15 kΩ/40° C 1.30 kΩ/60° C Check wiring. Check o.k.: ECU faulty Figs. 1, 9 **Note:** If the display „Temperature sensor short to positive" and/or „Transv. acceleration sensor short to positive" appears, this may be due to a faulty control unit. 1. Remove short circuit 2. Replace control unit.

Printed in Germany, XIX – 1993

Fault, Fault code	Possible Causes, Elimination, Remarks
Test point 16 **Selector lever switch/transmission** Fault code 38	**Tiptronic warning lamp comes on, transmission is in emergency mode.** Specification: Engine may be started in P or N positions only Actual status: Engine may also be started in other selector lever positions except P and N Possible faults: Open circuit, short to ground, short to positive Start possible, except P and N 1) Check adjustment of bowden cable to position switch. – If required, run electrical test as described under Test point 14, item 4 – No start possible? 2) Pull off start relay R 61 in Central Electrical System – Ground must be present at relay base terminal 85 when the selector lever is set to P or N. – Ground present: Check start relay or ignition lock and related wiring – No ground: Check position switch and wiring to start relay 3) Check position switch as described under Test point 14, item 4 – Position switch o.k. Check continuity: a) Position switch pin 6 to Central Electrical System (start relay). b) Junction 40 pin 10 to DME connector pin 42 – Wiring o.k. Transmission-based starting requirements are met. Figs. 2, 5, 6, 7
Test point 17 **Control unit faulty** Fault code 42	**Tiptronic warning lamp comes on, transmission is in emergency mode.** Replace control unit
Test point 18 **Control unit faulty** Fault code 43	**Tiptronic warning lamp comes on, transmission is in emergency mode.** Replace control unit

Printed in Germany, XIX – 1993

Fault, Fault code	Possible Causes, Elimination, Remarks
Test point 19 **Control unit faulty** Fault code 44	**Tiptronic warning lamp comes on, transmission is in emergency mode.** Replace control unit
Test point 20 - 21 **Downshift fault/ rev. limiter** Fault code 45, 46	**Tiptronic warning lamp comes on, transmission is in emergency mode.** Possible faults: Corrupted rpm signal, from output or engine or output/engine rpm relationship Faulty transmission (clutch slips) 1) Check drive rpm sensor, Test point 14 2) Check transmission
Test point 22 **Manual program switch** Fault code 51	**No manual program possible.** Detectable faults: Short to ground 1) Check operation with Tester 9288 (Input signals) 2) Pull connector off ECU. Check ground at pin 26. Check connection from ECU/pin 48 to selector lever switch/pin 3 Connection o.k. Exchange selector lever switch unit Switch and connection o.k.: ECU faulty Figs. 1, 6, 8
Test point 23 **Tip-switch up/down shifting** Fault code 52	**No manual program possible.** Detectable faults: Short to ground 1) Check operation with Tester 9288 (Input signals) 2) Pull connector off ECU Check ground at pin 26 Check connection from ECU/pin 10 to selector lever switch/pin 2 (upshift) or connection from ECU/pin 29 to selector lever switch/pin 1 (downshift). Connection o.k. Replace selector lever switch unit Switch and connection o.k., ECU faulty Figs. 1, 8

Printed in Germany, XIX – 1993

Fault, Fault code	Possible Causes, Elimination, Remarks
Test point 24 **Kick-down switch** Fault code 53	**No kickdown shift.** Detectable faults: Short to ground 1a) Acoustical check of switch b) Check operation with Tester 9288 (Input signals - Test) 2) Remove and check kick-down switch (Note: Adjust switch after replacement) 3) Pull connector off ECU. Check connection of ECU pin 30 to kick-down switch pin 2. Check o.k.: ECU faulty Figs. 1, 12
Test point 25 **Transverse acceleration sensor** Fault code 54	**Upshifting in curves is not prevented.** Detectable faults: Open circuit/short to ground, short to positive 1) Check sensor with Tester 9288 (actual values) (Nominal value around 0 g with vehicle on level surface. Sensor can be checked by raising the vehicle on one side). 2) Remove connector from sensor. Check sensor supply (5 V) to pin 3 and ground at pin 1. 3) Check wiring according to wiring diagram Check continuity from pin 45/ECU to pin 3/sensor Pin 40/ECU to pin 2/sensor Pin 44/ECU to pin 1/sensor Short to ground at pin 2 und pin 3/sensor to pin 7/ECU (ground) Short to positive: Pins 1, 2 and 3/sensor to pin 1/ECU (positive) Check ground connection of pin 44/ECU Wiring o.k.: Replace sensor Fault persists: ECU faulty Figs. 1, 11

Printed in Germany, XIX – 1993

Fault, Fault code	Possible Causes, Elimination, Remarks

Test point 26

Speed signal 1 of ABS

Fault code 55

Upshifting is not prevented, no manual program

Detectable faults: Open circuit/short to ground/short to positive

1) Signal comes from ABS. ABS o. k.?

2) Check signal with Tester 9288, raising the vehicle and rotating right-hand front wheel manually.

3) Check wiring according to wiring diagram.

Check for continuity: Pin 12/ECU to ABS-SG/pin 23

Short to ground: Pin 12 to pin 7/ECU (ground)

Short to positive: Pin 12 to pin 1/ECU (positive)

4) Check signal with oscilloscope (ECU connector pin 12) (Ignition on)

Speed signal

Signal present: ECU faulty

No signal: ABS faulty

Figs. 1, 3

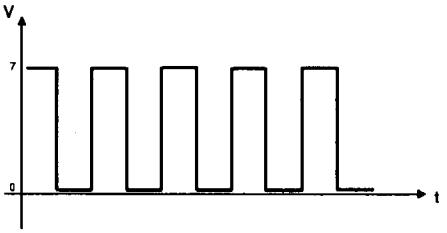

Test point 27

Combi-Instrument Input

(Display as of M-program)

Fault code 56

No diagnosis possible.

Detectable faults: Open circuit/short to ground, short to positive

1) Turn manual program on and off
Check display on instrument

2) Pull off ECU connector. Connect pin 13 to ground.
Display o.k.: ECU faulty

3) Check wiring of ECU pin 13 to speedo pin 9.

Wiring o.k. Speedometer faulty

Figs. 1, 14

Printed in Germany, XIX – 1993

Fault, Fault code	Possible Causes, Elimination, Remarks

Test point 28

Oil cooler blower relay
Fault code 57

Detectable faults: Short to positive

1) Turn cooler blower on and off using Tester 9288. (Drive links) Acoustical check

2) Check fuse No. 2 (Central Electrical System)

3) Disconnect oil cooler relay R 04.

Shunt terminals 87 and 30 on relay base.

Blower runs: Relay faulty

Blower does not run: Check blower

4) Check connection of ECU/pin 49 to relay base/terminal 85. (Observe connection to A/C control unit).

Wiring o.k.: ECU faulty

Fig. 1

Test point 29

Switch R-position
Fault code 59

Tiptronic warning lamp comes on, transmission is in emergency mode.
Possible faults: Open circuit, short to ground, signal implausible

1) Ground must be present at pin 41 when the selector lever is set to the P and R positions. (N is possible due to overlaps)

- No ground: Check wiring from ECU connector pin 41 to position switch connector pin 8.
- Wiring o.k. Check position switch as described under Test point 14, item 4.

Figs. 1, 7

Printed in Germany, XIX – 1993

Fault, Fault code	Possible Causes, Elimination, Remarks
Test point 30 **Reverse light relay** Fault code 60	**No diagnosis possible.** Detectable faults: Open circuit/short to ground, short to positive 1) Trigger reverse light relay with Tester 9288 (Drive links). The relay and the reverse lights must come on and go off in two-second intervals. (Acoustical check. Relay is located on the left-hand side behind the instruments). 2) Disconnect fog light relay R 31 (Central Electrical System). (Note: Both R 31 and RFL relay are supplied via Si 14 and R 01.) – Check voltage at terminal 30 of relay base. – No voltage: Check fuse 14 and relay R 01 (Central Electrical System). 3) Pull connector off ECU. Short-circuit pin 25 to ground (pin 7). Does reverse light relay pick up? ECU faulty 4) Pull off reverse light relay. Check voltage at terminal 30 of relay base. Check connection of ECU/pin 25 to relay base/terminal 85. Wiring o.k.: Relay faulty Fig. 1

Printed in Germany, XIX – 1993

Troubleshooting the Tiptronic transmission (mechanical/hydraulic section)

Introduction

The below troubleshooting chart for the mechanical/hydraulic section of the Tiptronic is designed as a guideline for repair operations.

The faults have been arranged in the way they are usually indicated by the customers. Deviations of the descriptions are possible and should be completed accordingly by the service personnel.

If complaints about leaks are received it is recommended to determine the location of the leak as closely as possible before any sealing operations are started. Crack testing agents such as

Spot - Check or Met-L-Check

are suitable for this purpose. These products are marketed as spray cans and allow positive identification of the leak after a short test drive.

Troubleshooting procedure: Proceed in the sequence of the selector lever positions, starting with

1. Position P Page D 38 - 103
2. Position R Page D 38 - 103
3. Position N Page D 38 - 105
4. Position D Page D 38 - 105
5. Position 3, 3rd gear Page D 38 - 108
6. Position 2 Page D 38 - 108
7. Position 1 Page D 38 - 108
8. Torque conv. clutch Page D 38 - 108
9. General Page D 38 - 109
10. Leaks Page D 38 - 110
11. Noises Page D 38 - 111

Printed in Germany, XXII - 1994

Clutches, brakes and freewheels applied in the individual gears

Selector lever position	Gear	Clutches			Brakes				Freewheels		
		A	B	E	C'	C	D	F	1st gear	2nd gear	3rd gear
D	1.	X		X					X		X
D	2.	X		X	X	X				X	X
D	3.	X	X	X		X					X
D	4.	X	X			X		X			
3	1.	X		X					X		X
3	2.	X		X	X	X				X	X
3	3.	X	X	X		X					X
2	1.	X		X					X		X
2	2.	X		X	X	X				X	X
*1	1.	X		X			X		(X)		X
R	R		X	X			X				

* engine brake effective in overrun mode

This overview allows the components affected to be located if mechanical damage has occurred.

Troubleshooting mechanical/hydraulic section

(Causes indicated in italics are located in the HCU)

Fault	Possible cause	Remedy
1. Position P		
1.1 Parking position does not engage	• Shift cable between shift lever and transmission adjusted incorrectly	• Correct adjustment
	• Excessive friction in parking lock mechanism	• Replace parking lock components (linkage rod, pawl) or make them operative again
1.2 Parking position does not remain engaged (jumps out of gear)	• Shift cable between shift lever and transmission adjusted incorrectly	• Correct adjustment
1.3 Engine cannot be started	• Position switch adjusted incorrectly	• Correct adjustment
	• Position switch faulty	• Replace position switch • Refer to diagnosis item 16
2. R Position		
2.1 No reverse gear	• Shift cable between shift lever and transmission adjusted incorrectly	• Correct adjustment
	• *Reverse lock remains operative*	• *Replace HCU*
	• Oil strainer clogged	• Refer to item 11.2
	• Clutch B destroyed. No third gear is therefore available	• Replace transmission*
	• Brake D destroyed. No engine brake effect is therefore available in position 1, 1st gear	• Replace transmission*
	• Clutch E destroyed. Hence no engine brake effect in 2nd and 3rd gear as well as in position 1, 1st gear	• Replace transmission*

* Repair possible if ATF fluid does not contain excessive dirt; otherwise replace transmission.

Printed in Germany, XIX – 1993

Fault	Possible cause	Remedy
2.2 Poor power transmission	• *Pressure in clutch B or E or brake D is too low*	• *Replace HCU*
2.3 Slipping or judder when moving off	• Clutch B or E or brake D damaged	• Repair or replace transmission*
2.4 Hard, bumpy engagement of P-R or N-R or clearly noticeable double shock during P-R or N-R shifts	• Idle speed too high • *Damper B faulty. In this case, 2-3 shift operations will also be impaired* • *Modulating pressure excessively high* • Rectangular rings on cylinder F/hub E side leaky	• Adjust engine • *Replace HCU* • *Check TE* • Refer to diagnosis item 13 • *Replace HCU* • Replace transmission
2.5 Reverse light does not light (electrical system o.k.)	• Position switch adjusted incorrectly • Position switch faulty	• Correct adjustment • Replace position switch • Refer to diagnosis item 14
2.6 No reverse and no forward gear	• *Main pressure valve stuck* • *Main pressure valve spring broken*	• *Replace HCU*
2.7 Vibrations in reverse gear	• Torque converter out of balance	• Replace torque converter

* Repair possible if ATF fluid does not contain excessive dirt; otherwise replace transmission.

Printed in Germany, XIX – 1993

Fault	Possible cause	Remedy
3. N Position		
3.1 Engine cannot be started	• Position switch adjusted incorrectly	• Correct adjustment
	• Position switch faulty	• Replace position switch • Refer to diagnosis item 17
3.2 Vehicle moves off or creeps	• Shift cable between shift lever and transmission adjusted incorrectly	• Correct adjustment
	• Clutch A faulty (welded up)	• Replace transmission*
	• Second rectangular ring on turbine shaft faulty	• Seal
4. D Position		
4.1 No power flow	• Shift cable between shift lever and transmission adjusted incorrectly	• Correct adjustment
	• Oil strainer clogged	• Refer to item 11.2
	• *Main pressure valve stuck*	• *Replace HCU*
	• *Main pressure valve spring broken*	• *Replace HCU*
	• Clutch A faulty	• Replace transmission*
	• 1st gear freewheel slipping	• Replace transmission*
4.2 Poor power transmission	• *Pressure in clutch A too low*	• *Replace HCU*

* Repair possible if ATF fluid does not contain excessive dirt; otherwise replace transmission.

Printed in Germany, XIX – 1993

Fault	Possible cause	Remedy
4.4 Slipping or judder when moving off	• Clutch A damaged	• Repair or replace transmission*
4.5 Hard, jerky engagement of N-D	• Idle speed excessively high • *Damper A defective* • Clutch A damaged	• Adjust engine • *Replace HCU* • Repair or replace transmission*
4.6 Knocking noise in N position	• Torque converter out of balance	• Fit torque converter offset by 180° with regard to driver plate
4.7 No shift 1-2/2-1	• *Shift valve 1-2 stuck* • *Pressure reducer valve 1 stuck* • Brakes C' and C damaged	• *Replace HCU* • Repair or replace transmission*
4.8 No shift 2-3/3-2	• *Shift valve 2-3 stuck* • Clutch B damaged	• *Replace HCU* • Repair or replace transmission*
4.9 No shift 3-4/4-3	• *Shift valve 3-4 stuck* • Brake F damaged	• *Replace HCU* • Repair or replace transmission*
4.10 Vehicle moves off in 2nd gear	• *Shift valve 1-2 stuck*	• *Replace HCU*
Vehicle moves off in 3rd gear	• *Shift valve 1-2 and 2-3 stuck*	• *Replace HCU*
Vehicle shifts from 1st into 3rd	• *Shift valve 2-3 stuck*	• *Replace HCU*

* Repair possible if ATF fluid does not contain excessive dirt; otherwise replace transmission.

Fault	Possible cause	Remedy
4.11 Shift rpm		
Zero-load shift not o.k.	• Throttle potentiometer adjustment	• Refer to diagnosis item 7
Shift point not o.k.	• Throttle potentiometer adjustment	• Refer to diagnosis item 7
No kickdown shift	• Kickdown switch faulty	• Check switch, replace if required
4.12 Shift progressions		
Zero-load shifts excessively hard	• *Modulating pressure excessively high*	• *Replace HCU*
	• *Damper faulty*	• *Replace HCU*
	• Friction discs damaged	• Replace transmission*
4.13 Shifts too lengthy 1-2/2-3/3-4	• *Damper faulty*	• *Replace HCU*
	• *Modulating valve binding*	
	• *Pressure reducer valves 1 and 2 binding*	
Full-load and kickdown shifts too lengthy	• *Modulating pressure too low*	• *Replace HCU*
	• *Damper damaged*	• *Replace HCU*
	• Friction discs damaged	• Replace transmission*
4.14 Upshifts 1-2/2-3/3-4 too hard	• *Modulating valve binding*	• *Replace HCU*
Full-load and kickdown shifts too hard	• *Modulating pressure not o.k.*	• *Replace HCU*
	• *Damper damaged*	• *Replace HCU*
4.15 Downshift 4-3 too hard	• *Draining baffle F clogged*	• *Replace HCU*

* Repair possible if ATF fluid does not contain excessive dirt; otherwise replace transmission.

Printed in Germany, XIX – 1993

Fault	Possible cause	Remedy
5. Position 3, 3rd gear		
5.1 No engine braking effect 4-3	• *Damper E faulty*	• *Replace HCU*
	• Clutch E damaged	• Replace transmission*
6. Position 2		
6.1 Manual downshift 3-2 not o.k.	• *Shift valve 2-3 stuck* • *Damper C' faulty*	• *Replace HCU*
6.2 No engine braking effect	• Brake C' or clutch E damaged	• Replace transmission*
7. Position 1		
7.1 Manual downshift 2-1 not o.k.	• *Shift valve 1-2 stuck* • *Damper D faulty* • *Modulating valve binding*	• *Replace HCU*
7.2 No engine braking effect	• Brake D or clutch E damaged	• Replace transmission*
8. Torque converter clutch		
8.1 Shift progressions too harsh	• *Torque converter clutch damper faulty*	• *Replace HCU*
	• Torque converter not o.k.	• Replace torque converter
8.2 No converter clutch shift	• *Shift slide for torque converter stuck*	• *Replace HCU*
	• Torque converter faulty	• Replace torque converter

* Repair possible if ATF fluid does not contain excessive dirt; otherwise replace transmission.

Fault	Possible cause	Remedy
8.3 Torque converter clutch always closed (engine stalls in driving position)		• *Replace HCU*
8.4 Power flow during or after starting	• Torque converter clutch faulty	• Replace torque converter
9. General		
9.1 Noises are audible after longer driving periods and power flow is interrupted subsequently	• Oil strainer of HCU clogged	• If no burnt clutch lining is present in the oil pan, only the oil strainer requires replacing. Replace transmission in all other cases.
9.2 No forward or rear power flow, heavy noises	• Driver plate between torque converter and engine torn off • Pump driver torn	• Replace driver plate or torque converter, respectively • Replace transmission*
9.3 Engine is stalled when braking heavily to standstill	• *Torque converter valve faulty* • Torque converter quick-opening feature (only standardized as of M-program)	• *Replace HCU* • Install M program ECU
9.4 Power flow is interrupted during heavy braking and subsequent acceleration	• Transmission with old type of oil strainer (prior to transmission No. 1850)	• Fit oil strainer with pickup tube (standard as of transmission No. 1850)

* Repair possible if ATF fluid does not contain excessive dirt; otherwise replace transmission.

Printed in Germany, XIX – 1993

Fault	Possible cause	Remedy
10. Leaks		
10.1 Oil drips from torque converter bell housing	• Seal in pump housing damaged	• Replace oil seal
	• Pump housing leaky	• Replace pump assy.
	• Torque converter leaks at weld joint	• Replace torque converter
10.2 Leaks between transmission housing and oil sump	• Oil sump mounting bolts not tightened to specified torque	• Retighten bolts
	• Oil sump gasket damaged	• Replace gasket
10.3 Leaks between intermed. plate and transmission housing (particularly in pump pressure hole area)	• Torque converter bell housing mounting bolts have worked loose	• Retighten bolts
10.4 Oil loss at transmission connector	• O-ring damaged	• Replace O-ring
10.5 Oil loss on output end	• Shaft seal on output side damaged	• Replace oil seal
10.6 Oil loss across or at breather	• Oil level too high	• Correct oil level
	• Incorrect oil (excessive foaming)	• Change oil, remove transmission if required and drain complete with torque converter
	• Breather cover missing	• Refit cap or replace breather as required
	• O-ring at breather damaged	• Replace O-ring
	• Lock washer preload insufficient	Replace lock washer
10.7 Oil loss at cooler line	• Bolt connection has worked loose	• Retighten bolts
	• Cooler pipe damaged	• Replace cooler pipe
	• Cooler leaky	• Replace cooler

Printed in Germany, XIX – 1993

Fault	Possible cause	Remedy
10.8 Oil loss at intermediate plate	• Plug at intermediate plate is leaking	• Retighten plug • Replace seals
10.9 Leaks between transmission housings	• Mounting bolts have worked loose	• Retighten bolts
	• Gasket damaged	• Replace gasket
10.10 Oil loss at rear axle breather	• Oil level excessively high • Oil buildup in housing area of long joint flange	• Correct oil level
11. Noises		
11.1 High-pitched noise in all shift positions, particularly while oil is cold. Oil pump intake noise	• Oil level too low • *HCU leaky* • Pump bushing has seized	• Correct oil level • *Replace HCU* • Replace pump
11.2 High-pitched, chirping noise varying with rpm in all shift positions, particularly when engine is hot, may appear after longer driving periods, sometimes in conjunction with interruption of power flow	• Oil strainer clogged	• Replace oil strainer if no friction lining residues are found in the oil sump. Replace the complete transmission assy. in all other cases.
11.3 Heavy noise when torque converter clutch is closed	• Torsion damper faulty	• Replace torque converter
11.4 Noises in reverse	• Pump bushing has seized	• Replace pump

Printed in Germany, XIX – 1993

Workshop Manual

911

Carrera 4

Dr. Ing. h.c. F. Porsche Aktiengesellschaft

The workshop manual is only for the internal use of the Porsche Dealer Organization.

© 1988 Dr. Ing. h.c. F. Porsche
Aktiengesellschaft
Technical Service Department
D-7140 Ludwigsburg

All rights reserved – Printed in Germany

WKD 482520

List of Repair Groups Carrera 4

General	Technical Data	Page 0.1
Repair Groups		Group
Volume I	Maintenance, Self-diagnosis	03
	Engine, Crankcase, Suspension	10
Engine,	Engine, Crankshaft, Pistons	13
Maintenance	Engine, Cylinder Head and Valve Drive	15
	Engine, Lubrication	17
	Engine, Cooling	19
	Fuel Supply	20
	Fuel System, Electronic Injection	24
	Exhaust System/Emission Controls	26
	Starter, Power Supply, Cruise Control	27
	Ignition System	28
	Diagnosis	
Volume II	Clutch, Controls	30
	Clutch	32
Transmission	Manual Transmission, Controls, Case	34
(manual)	Manual Transmission, Gears, Shafts	35
	Differential, Transaxle System, All-Wheel Drive	39
	Diagnosis	
	Clutch, Controls	30
Volume III	Torque Converter	32
	Automatic Transmission, Controls, Case	37
Transmission	Automatic Transmission, Gears, Shafts	38
(automatic)	Differential, Transaxle System	39
	Diagnosis	
Volume IV	Front Wheel Suspension	40
	Rear Wheel Suspension, Axle Shaft	42
Chassis	Wheels, Tires, Alignment	44
	Antiblock System	45
	Brakes, Mechanical	46
	Brakes, Hydraulics, Regulator, Booster	47
	Steering	48
	Diagnosis	
Volume VI	Body-Front Section	50
	Body-Center Section	51
Body	Body-Rear Section	53
	Lids	55
	Doors	57
	Electric Sunroof	60
	Hardtop	61
	Bumpers	63
	Glasses, Window Control	64
	Exterior Equipment	66
	Interior Equipment	68
	Seats	72
	Seat Covers	74
Volume VI	Heater	80
	Ventilation	85
Heating, Ventilation,	Air Conditioner	87
Air Condition	Diagnosis	
Electrics	Instruments, Fuel Gauge, Alarm System	90
	Radio, Telephone, On-board-computer	91
	Windshield Wipers and Washer	92
	Exterior Lights, Lamps, Switches	94
	Interior Lights	96
	Diagnosis	
Volume VII	Wiring	97
Electrics		
Wiring Diagrams		

Printed in Germany, 1988

Survey of Information Published in Technical Manual beginning in 1985

6 Cyl. 4

	TI/QI		No.	911 C2/C4	911		911 Turbo	Remarks, Model, Also refer to...	Date
1985									
– Summer Tires 205/55 VR 16 and 225/50 VR 16	T		1/85		●		●	Goodyear/Dunlop	28.02.85
– Brake Booster 8"	Q		1/85		●		●	Turbo Look	15.02.85
– Breake Pressure Regulator	Q		2/85		●			Turbo Look/55bar	15.02.85
– Flat Spotting of Tires	Q		3/85		●		●	4 bar	10.04.85
– Turbo Brake Calipers Front and Rear	Q		4/85		●		●	Turbo/...-Look	10.04.85
– Aluminium Wheel Nuts	Q		5/85		●		●	Special Tool P 300	07.06.85
– Shock Absorber front/rear	Q		6/85		●		●	1985 (F) Model	07.06.85
– Winter Tires and Tire Chains	T		2/85		●		●	Replaced	30.10.85
– Brake Force Regulator	Q		7/85		●			33bar/55bar	29.11.85
– Shock Absorber front/rear	Q		8/85		●		●	1986 (G) Model	29.11.85
1986									
– Brake Lines Visual Inspection On Car	Q		1/86		●		●	Pipe/hose clearance	09.05.86
– Testing Criteria and Measures in Case of Damages on Steering System	T		1/86		●		●	All types	30.07.86
– Winter Tires and Tire Chains	T		2/86		●		●	Replaced	29.10.86
– Whell Installation Installing Procedures	Q		2/86		●		●	Paint dot/wheel bolts	25.11.86
– Wheel Imbalance Balancing on Car	Q		3/86		●		●	Front wheels in "straight ahead" position	25.11.86
– Front / Rear Shock Absorbers	Q		4/86		●		●	1987 (H) Model	25.11.86
1987									
– Wheel Sizes / 7 J and 8 J x 16	Q		1/87		●		●	Wheel clearance	20.02.87
– Replacement Parts Brake Pad Kit	Q		2/87		●		●	Table	31.08.87
– Rear Axle Rear Axle Strut	Q		3/87		●		●	Spacer 2mm	16.10.87
– Wheel Rim Sizes / 7J und 8J x 16	Q	⊕	1/87		●		●	Wheel clearance	16.10.87
– Summer Tires and Wheel Rim Survey	T		1/87		●		●		30.11.87
– Winter Tires and Tire Chains	T		2/87		●		●		30.11.87
– Front / Rear Shock Absorbers Survey - 1988 Models	Q		4/87		●		●	1988 (J) Model	30.12.87

♦ = Conversion instructions or workshop campaign
▽ = Brochure
⊕ = Supplement or change for TI/QI

SERVICE

Date 30.04.90 VKQPI

Copyright by Dr. Ing. h. c. F. Porsche Aktiengesellschaft

Survey of Information Published in Technical Manual beginning in 1985

6 Cyl. 4

	TI/QI		No.	911 C2/C4	911		911 Turbo	Remarks, Model, Also refer to...	Date
1988									
– Brakes Brake Pads Without Asbestos	Q		1/88		●			Sweden, Norway, Denmark	29.04.88
– Emergency Collapsible Wheel Vredestein	Q		2/88		●		●	Repairing Not Permitted	22.07.88
– Propeller Shaft Crease / Optitemp	Q		3/88		●		●	New grease: Optitemp PU 35	05.09.88
– Recommended Winter Tires and Tire Chains	T		1/88		●		●		20.10.88
– Brake Pads Without Asbestos and Information for Adjusting Parking Brake	T		2/88		●		●	Survey - brake pads without asbestos	28.10.88
– New Tire Road Speed Designations and Summer Tire/Wheel Rim Survey	T		3/88		●		●		24.11.88
1989									
– Tire and Wheel Rim Survey	T		1/89	●				ZR tires for Carrera 4	08.02.89
– Front Axle - Wheel Carriers - Wheel Bearings	T		2/89	●				Cracking noises.	08.06.89
– Radial Oil Seals on Front Wheel Hubs	T		3/89	●			●	New sealring with studs	02.03.89
– Steering Gear Installation on Front Axle Cross Member	T	♦	4/89	●				Grating noises. WK 03 66000	08.06.89
– Replacing Spring Strut Mounting Parts on Front Axle	T	♦	5/89	●				Optimoly HT / 135 Nm WK 06 66000	08.06.89
– Correcting Special Tool P 300	T		6/89	●					15.06.89
– "VR" Summer Tires	T		7/89	●	●		●	Combined design of VR and ZR tyres.	16.07.89
– Survey of Summer Tires and Rims	T		8/89	●				Replaced	31.08.89
– Survey of Winter Tires, Rims and Tire Chains	T		9/89	●			●		29.09.89
– Survey of Winter Tires, Rims and Tire Chains	T		9/89	●			●		24.11.89
– Bolted Wheel Bearings on Front Axle	T		10/89	●				Cracking noises.	14.11.89
1990									
– Overview of tires and wheels/Type 959	T		1/90				●	Model 959 from M'89 (K)	26.02.90
– Breake system, rear axle Braking noise	T	♦	2/90	●				C 2: damping sheet, dampers.	23.03.90
– Survey of Summer Tires and Rims	T		3/90	●				Replced Nr. 8/89 of 31.08.1989	19.04.90

♦ = Conversion instructions or workshop campaign
∇ = Brochure
⊕ = Supplement or change for TI/QI

SERVICE

Date 30.04.90 VKQPI

Copyright by Dr. Ing. h. c. F. Porsche Aktiengesellschaft

Survey of Information Published in Technical Manual beginning in 1985

6 Cyl. 4

	TI/QI		No.	911 C2-C4	911		911 turbo	Remarks, Model, Also refer to...	Date
– Front and rear brakes Damper shims and vibration dampers -survey	T		4/90	●				From M'89 (K)	24.07.90
– Survey of Summer Tires and Wheels	T		5/90	●				Replaces T № 3/90	16.08.90
– Summary of winter tires, wheels and snow chains	T		6/90	●	●		●	Replaces T № 9/89	28.08.90

◆ = Conversion instructions or workshop campaign
▽ = Brochure
⊕ = Supplement or change for TI/QI

SERVICE

Date
30.04.90 | 31.12.90
VKQPI

Copyright by Dr. Ing. h. c. F. Porsche Aktiengesellschaft

The workshop manual of the Carrera 4 also includes that for the Carrera 2.
The Carrera 4 acts as the basis for description of the repairs in the manual.
“Carrera 4" also appears on every page in the header line.

Deviating descriptions for repairs on the Carrera 2 follow those of the Carrera 4. These repair descriptions for both models are separated by a yellow sheet.
“Carrera 2" appears on all pages in the header line after the separating sheet. The page number starts with 100 as an additional distinction.

Page

Wheel suspension, front, axle shaft

Tightening torques for front axle . . . . . 40 - 01
Installation instructions for wheel carrier . . . . . 40 - 1
Dismantling and assembling wheel suspension . . . . . 40 - 3
Removing and installing halfshaft . . . . . 40 - 11
Dismantling and assembling spring strut . . . . . 40 - 13

Wheel suspension, rear, axle shaft

Tightening torques for rear axle . . . . . 42 - 01
Notes on recessed spring strut mount from 1991 model on . . . . . 42 - 1
Dismantling and assembling wheel suspension . . . . . 42 - 3
Replacing wheel bearings . . . . . 42 - 9
Removing and installing spring strut . . . . . 42 - 13
Dismantling and assembling spring strut . . . . . 42 - 15
Removing and installing drive shaft . . . . . 42 - 19

Wheels, tires, alignment

Wheels and tires . . . . . 44 - 01
Adjustment values for alignment . . . . . 44 - 02
Sample measuring card . . . . . 44 - 04
Fitting 16" and 17" cup design wheels to the vehicle . . . . . 44 - 05
Alignment . . . . . 44 - 1
Tire fitting . . . . . 44 - 9

Antiblock system

Acceleration sensors for longitudinal and transverse locks . . . . . 45 - 1
Testing ABS in 911 Carrera 4 with ABS 2-LED Tester . . . . . 45 - 7
PDAS diagnosis / Troubleshooting D39/45-1

Printed in Germany - XXII, 1995

Brakes, mechanical

Tightening torques for brake mechanisms . . . . . 46 - 01
Technical data . . . . . 46 - 03
Checking the thickness of the brake pads . . . . . 46 - 1
Removing and installing the brake pads of the four-piston fixed-caliper brake . . . . . 46 - 2
Adjusting the brake pressure rod / checking the brake light switch setting . . . . . 46 - 4
Checking and adjusting the hand brake . . . . . 46 - 5
Checking brake disc lateral runout . . . . . 46 - 7
Checking brake disc thickness . . . . . 46 - 9
Dismantling and assembling front brake . . . . . 46 - 11
Dismantling and assembling rear brake . . . . . 46 - 13

Brake - hydraulics, regulator, booster

Tightening torques for brake hydraulics . . . . . 47 - 01
Information on four-piston fixed caliper . . . . . 47 - 03
Brake fluid change / Bleeding the brake and lock control . . . . . 47 - 1
Pressure tests on the booster circuit . . . . . 47 - 9
Removing and installing pressure warning switch . . . . . 47 - 13

Steering

Tightening torques for steering . . . . . 48 - 01
Replacing the steering in case of accident damage . . . . . 48 - 03
Inspection and installation work on the rack and pinion power steering . . . . . 48 - 1
Assembling the track rods on the steering gear . . . . . 48 - 3
Removing and installing steering gear . . . . . 48 - 5
Removing and installing steering/ignition lock . . . . . 48 - 9
Checking hydraulic operation of steering system (pressure measurement) . . . . . 48 - 11

Printed in Germany - XXII, 1995

Tightening torques for front-axle

Location	Thread	Tightening torque Nm (ft.lb.)
Cross member		
Cross member to chassis outer inner	 M 12 M 10	 100 (73) 46 (34)
Rubber-metal bearing to cross member	M 8	23 (17)
Central pipe / FA final drive		
Rubber-metal bearing to FA final drive	M 12	85 (62.5)
Rubber sealing disk (in area of clamping sleeve) to central shaft	M 6	10 (7.5)
Central tube to transmission (FA and RA drive)	M 12	85 (62.5)
Clamping sleeve to central shaft (FA and RA drive)	M 10	75 (55)
Drive shaft		
to FA drive	M 8	42 (31)
to wheel hub	M 22	460 (340)
Side member		
to chassis (front)	M 12	85 (62.5)
to cross member (rear)	M 10	46 (34)
Control arm/joint carrier		
Control arm front to side member	M 12	110* (81)*
Control arm rear to side member	M 12	85 (62.5)

* The screw with washer must be replaced each time the screw connection is undone.

Printed in Germany – VI, 1990

Location	Thread	Tightening torque Nm (ft.lb.)
Joint carrier to control arm (Castor excenter and fastening)	M 10	65 (48)
Joint carrier to wheel carrier (Ball joint)	M 12	65 (48)
Cooling-air guide for brakes to control arm	M 6	10 (7.5)
Spring strut/wheel carrier		
Spring strut to wheel carrier (camber adjustment)	M 12 x 1.25*	135 (101)*
Spring strut to chassis	M 8	23 (17)
Spring strut support mount to piston rod	M 14	80 (59)
Plug** of spring strut suppport mount (911 Carrera RS)	M 50	180** (133)
Brake caliper to wheel carrier	M 12	85 (62.5)
Speed sensor to wheel carrier	M 6	10 (7.5)
Retainer plate for wheel bearing on wheel carrier	M 8	37 (27)
Wheel hub on wheel carrier (Carrera 2 / turbo as of 91)	M 22	460 (339)
Stabilizer		
to side member	M 8	23 (17)
to stabilizer mount	M 10	46 (34)
Stabilizer mount to wheel carrier (balljoint)	M 10	35 (26)

* Only use original screws and hexagon nuts according to SP catalog (pitch, quality). Replace M 12 x 1.5 screws (gold-colored, tightening torque 120 Nm (88.5 ft.lb.)) if necessary. Lubricate threads (approx. 10 mm of beginning of threads) and head (bearing surface) of bolts with Optimoly HT.

** Do not undo plug while the vehicle is on its wheels. Replace plug after removal (micro-sealed plug).

Printed in Germany – XVI, 1992

Location	Thread	Tightening torque Nm (ft.lb).
Steering		
(unspecified values in repair group 48)		
Tie rod (ball joint) to steering arm	M 12	65 (48)
Universal joint to steering gear and steering shaft	M 8	23* (17)
Steering gear to cross member		Tightening torques and note in steering repair group
Wheel mount		
Wheel to hub	M 14	130 (96)

* Replace setscrews and locknuts each time they are removed.

Printed in Germany – III, 1989

Installation instructions for wheel carrier

General

Modified wheel carriers have been used in the current model year 1990. The mounting of the wheel bearing in the wheel carrier has been changed.

Previous design: with internal circlip
Modified design: with screwed-on holding plate (arrow)

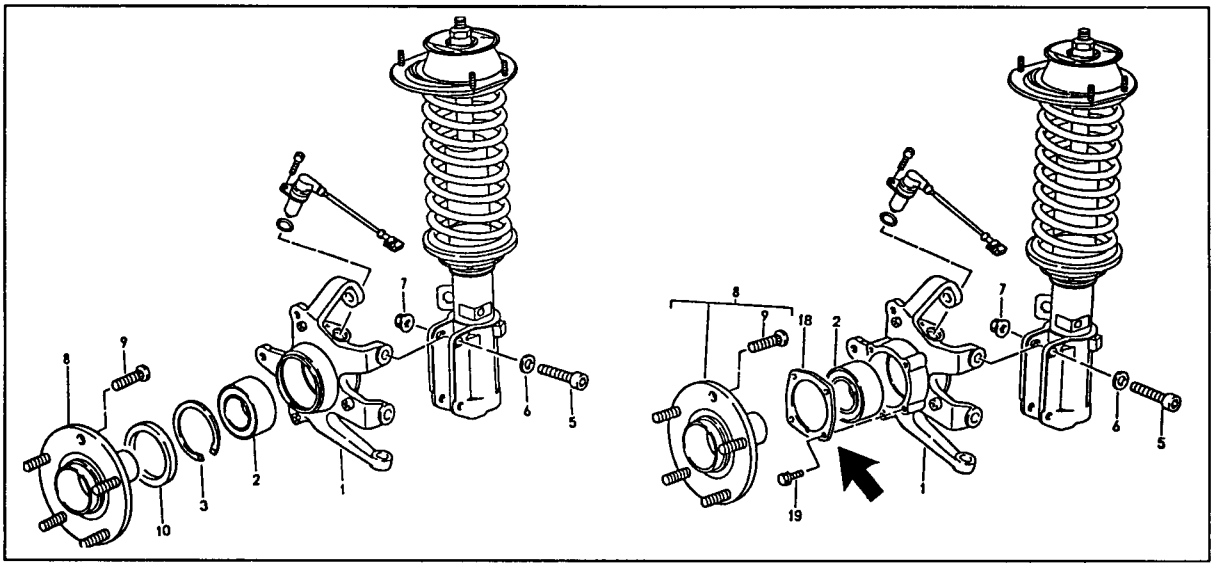

Previous design **Modified design**

Installation instructions

The modified wheel carrier (left and right) with screwed-on wheel bearing also applies retrospectively to all 911 Carrera 2 and Carrera 4 (Model '89/'90).
A mixed configuration for left and right is permitted.
Refer to TI group 4 for the exact part set.

The **sealing ring (10)** previously mounted on the wheel hub has now been omitted and must be **removed** during conversion to the modified wheel carrier design.

The wheel bearing is damaged when the wheel hub is pulled off and must be replaced.

The fixing screws (19) for the holding plate (18) must be greased with **Optimoly HT** at the start of the thread before screwing in. Tighten the screws with a torque of 37 Nm.

Printed in Germany – V, 1989

Installation instructions for securing the wheel carrier at the spring strut:

Fillister-head screws (5), nuts (7) and washers (6) must be **renewed** after dismantling.
The washer and nut contact surfaces on the spring strut must be free of grease for assembly.
Grease screws (5) with **Optimoly HT** at the start of the thread (approx. 10 mm) and on the screw head (contact surface) before installation. **Tightening torque: 135 Nm.**

After renewal of one or both wheel carriers, the wheel alignment values (camber/toe) must be checked and readjusted if necessary.

Printed in Germany – V, 1989

Dismantling and assembling wheel suspension

Tools

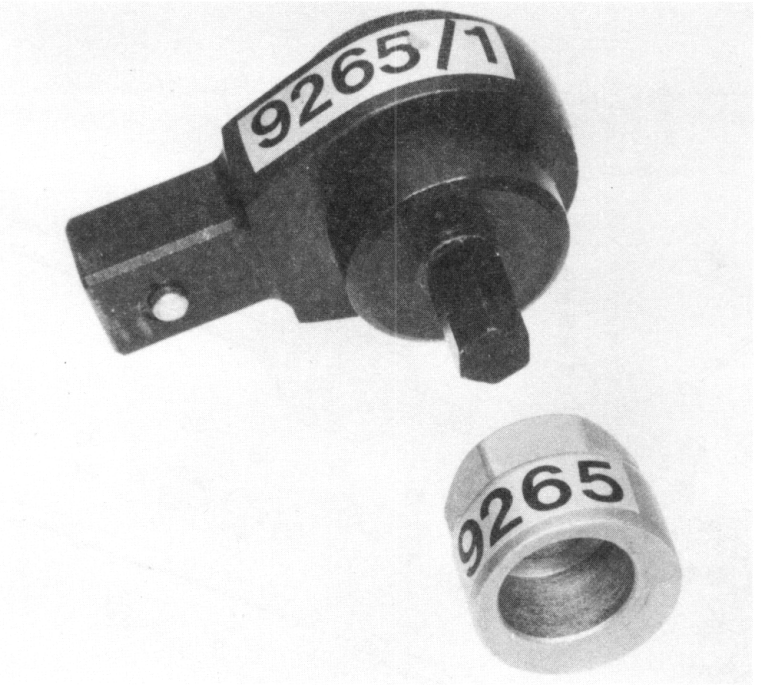

88/486

No.	Description	Special Tool	Order Number	Remarks
–	Excentric socket	9265	000.721.926.50	
–	Switchover socket-type ratchet	9265/1	000.721.926.51	
–	Tie rod extractor			commercially available e.g. Nexus 168-1
–	Ball joint extractor			commercially available fork aperture approx. 20 mm) e.g. Nexus 169-1. Used to press the ball joint off the wheel carrier

Dismantling and assembling wheel suspension

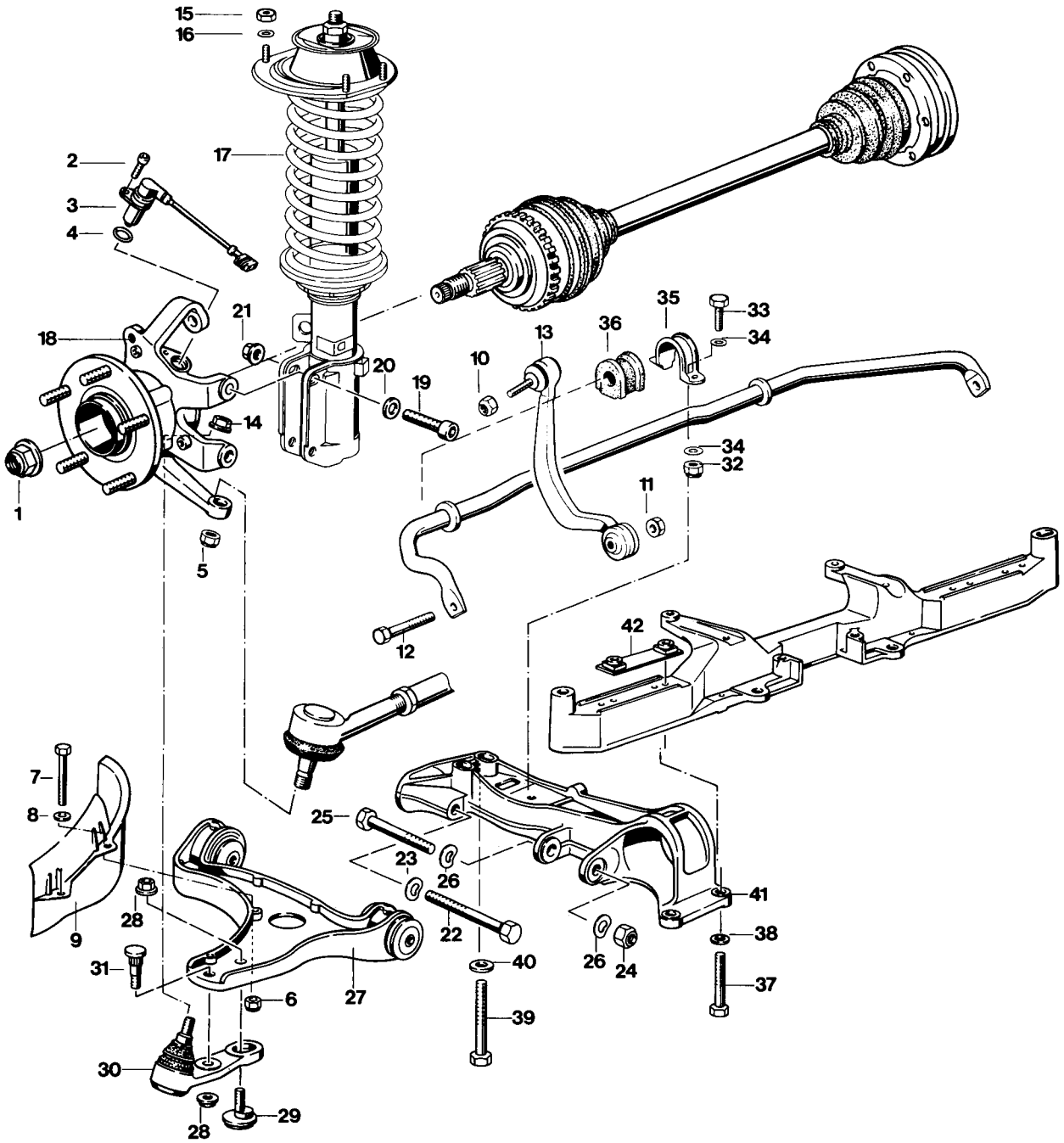

Printed in Germany – XIII, 1991

No.	Designation	Qty.	Note: Removal	Installation
1	Lock nut	1	Before lifting the vehicle, undo the nut, actuating the brakes at the same time.	Replace. Coat thread and nut seating face with Optimoly HT. Tighten to 460 Nm (339 ftlb).
2	Pan head screw	1		Coat thread with Optimoly HT. Tighten to 10 Nm (7 ftlb).
3	Rpm sensor	1		Coat stem with Molykote Longterm.
4	Round seal	1		Replace
5	Lock nut	1		Replace. Ball joint and steering arm tapers free of grease. After inserting into the steering arm, coat thread with Optimoly HT. Tighten to 65 Nm (48 ftlb).
6	Lock nut	2		Replace. Tighten to 10 Nm (7 ftlb).
7	Bolt	2		
8	Washer	4		
9	Air duct	1		
10	Lock nut	1		Replace. Coat thread with Optimoly HT. Tighten to 46 Nm (34 ftlb).
11	Lock nut	1		Replace. Tighten to 46 Nm (34 ftlb).
12	Bolt	1		Coat thread with Optimoly HT.
13	Stabilizer bar mount	1		In case of replacement, observe references according to spare parts catalog.

Printed in Germany – XIII, 1991

No.	Designation	Qty.	Note: Removal	Installation
14	Lock nut	1	Pull off ball joint of joint carrier using a suitable puller, e.g. Nexus 169 - 1. Prior to pulling, coat puller and rubber boot of ball joint with tire assembly compound.	Replace. Ball joint and wheel carrier tapers free of grease. Coat thread of ball joint with Optimoly HT. Tighten to 65 Nm (48 ftlb).
15	Hexagon head nut	4		Coat thread of spring strut support mount with Optimoly HT. Tighten to 23 Nm (17 ftlb).
16	Washer	4		
17	Spring strut	1	When removing the strut, it is not necessary to remove the wheel carrier and the subsequent parts (items 19 to 21).	
18	Wheel carrier	1		Coat internal splines of drive shaft with Optimoly HT. If the wheel carrier has been separated from the strut, check and/or adjust wheel alignment.
19	Pan head screw	2		Replace. Use only genuine screw. Observe fitting and lubricating instructions (pp. 40 - 02 and 40 - 2).
20	Washer	2		Replace. Seating face on strut is grease-free.
21	Lock nut	2		Seating face on strut is grease-free.

Printed in Germany – XIII, 1991

No.	Designation	Qty.	Note: Removal	Note: Installation
22	Hexagon head bolt M 12 x 1,5 10.9	1		Replace bolt and washer item 23 whenever the bolt has been undone. Coat thread with Optimoly HT. Tighten to 110 Nm (81 ftlb).
23	Washer	1		Replace
24	Lock nut M 12 x 1,5	1		Replace. Tighten to 85 Nm (63 ftlb).
25	Hexagon head bolt M 12 x 1,5	1		Coat thread and stem with Optimoly HT.
26	Spring washer Washer	1 1		Replace spring washer. Place spring washer under lock nut.
27	Control arm	1		If the joint carrier (item 30) has been separated from the control arm, check and/or adjust the wheel alignment. No welding or straightening is permitted on those parts
28	Lock nut	2	Undo only when control arm or joint carrier is to be replaced	Replace after removal. Tighten to 65 Nm (48 ftlb).
29	Caster excenter adjuster	1		Coat eccentric running surf. with Optimoly TA
30	Joint carrier (ball joint)	1		Ball joint and wheel carrier tapers free of grease
31	Knurled screw	1		Coat thread with Optimoly HT.
32	Lock nut	1		Replace. Tighten to 23 Nm (17 ftlb).

Printed in Germany – XIII, 1991

No.	Designation	Qty.	Note: Removal	Note: Installation
33	Hexagon head bolt	1		Coat thread with Optimoly HT.
34	Washer	2		
35	Bracket	1		
36	Stabilizer bar mount	1		In case of replacement, observe references according to spare parts catalog. When fitting, coat with tire assembly compound or Omnis 32 (Texaco).
37	Hexagon head bolt M 10	2		Coat thread with Optimoly HT. Tighten to 46 Nm (34 ftlb).
38	Washer	2		
39	Hexagon head bolt M 12 x 1,5	2		Coat thread with Optimoly HT. Tighten to 85 Nm (63 ftlb).
40	Washer	2		
41	Side member	1		
42	Threaded plate	1		

Printed in Germany – XIII, 1991

Dismantling and assembly notes

Dismantling

1. Before lifting the vehicle, unbolt drive shaft mounting on wheel end, actuating the brake to keep the shaft from rotating.

2. Take off front wheel.

3. Open multi-plug socket at spring strut and take out connector.
   Unclip electrical wire from strut.

4. Separate brake line of spring strut from brake hose and remove brake caliper.
   Before performing this operation, press down pedal with pedal retainer unit to avoid brake fluid from flowing in from the reservoir.

5. Press tie rod ball joint out of steering arm using a suitable puller, e.g. Nexus 168-1.
   Start by undoing the inner lock nut at the tie rod adjuster, however. Turn tie rod and ball joint to the rear (arrow). Extend ball joint.

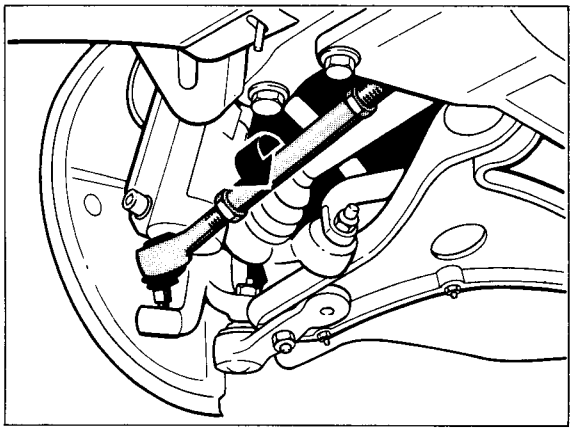

859-40

6. Remove brake cooling air duct from control arm.

7. Separate stabilizer bar mount at stabilizer bar and wheel carrier.

8. Undo wheel carrier (ball joint) and pull off with suitable puller e.g. Nexus 169-1.

Note

To avoid damaging the rubber boot of the ball joint, coat rubber boot and puller in this area with some tire assembly lubricant.
Insert puller from the front end.

9. Remove spring strut and wheel carrier.
   Undo spring strut/wheel carrier bolt joint (for camber adjustment) only when replacing those components.

Note

When removing the control arm, unbolt joint carrier/control arm union (caster adjuster) only when replacing control arm and/or joint carrier.

10. When removing the control arm, unbolt joint carrier/control arm union (caster adjuster) only when replacing control arm and/or joint carrier.

Printed in Germany – XIII, 1991

Assembly

1. Assemblle in reverse order. Check parts visually prior to assembly. Compare with new parts if required.
   No welding and straightening operations are permitted on suspension components.
   Use prescribed assembly compounds.
   Observe correct tightening torques.

2. Replace front control arm fastening screw (M 12/10 g), along with its washer whenever it has been undone or removed.
   When fitting the control arm, start by screwing in the control arm mounting bolts only lightly.
   Caution: Do not tighten the bolts until the vehicle rests on its wheels.

3. To avoid confusion when replacing parts (**993 and 964 parts** and, in certain cases, right-hand and left-hand parts), observe **parts usage** according to spares catalog. **In addition**, check parts prior to assembly referring to the identification mark / casting number of the **inscribed** part number (identification feature).

   964 parts (911 Carrera 2/4) = casting number starting with 964. 993 parts (911 Carrera as of MY '94) = casting number starting with 993.

   Spare part for left-hand side:
   3rd group of part number = **odd** number.
   Spare part for right-hand side:
   3rd group of part number = **even** number.
   Example:
   Right-hand part
   (control arm) = 964.341.018.06
   Left-hand part
   (control arm) = 964.341.017.06

Note

— The following front-axle parts or adjacent parts differ from each other only in minor details:

— Side member

— Control arm with **mounting bolts/mounting nut**

— Joint carrier

— **993** = olive-colored. Bore diameter of wheel carrier mount = 12 mm

— **964 = gold-colored**. Bore diameter (mount) = 10 mm

— Stabilizer bar / stabilizer bar mount

— Vibration damper

— Tensioning disc (ABS gear)
964 = 45 teeth
993 = 48 teeth

— Steering gear

— Brake booster with bracket

4. Fit spring strut support mount to spring strut tower in correct position.

   1 = Carrera 4 / Carrera 2
   2 = Turbo / Turbo-Look

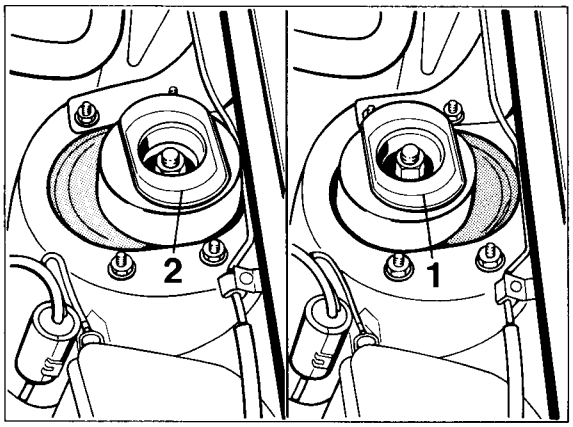

860-40

5. Bleed front brake circuit (conventional method).

6. When assembling or replacing components that affect the vehicle height, check wheel alignment and vehicle ride height.
   When replacing parts or undoing nut/bolt unions that affect wheel alignment only, it is sufficient to check and/or adust wheel alignment only, ist is sufficient to check and/o adjust wheel alignment.

Printed in Germany – XXI, 1994

Removing and installing halfshaft

Removing

1. Before raising the vehicle, undo halfshaft mounts on the wheel side. Apply the brakes at the same time.

2. Remove front wheel and underside panel.

3. Remove brake cooling duct from A-arm (1). Undo stabilizer mount at stabilizer bar (2). Undo joint carrier (ball joint at wheel carrier and press off using a suitable puller, e.g. Nexus 169-1 (3).

Note

To avoid damaging the rubber bellows of the ball joint, coat the rubber bellows and the corresponding area of the puller with tire assembly compound. Then fit the puller from the front.

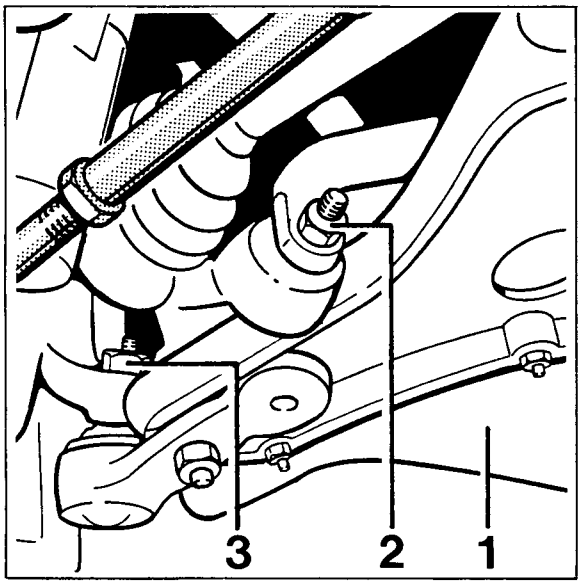

1093-40

4. Remove pan head screws of halfshaft from transmission flange.

Note

The CV joint may separate by itself if the bellows retainer (arrow) has been removed or is damaged.
The joint must therefore be protected against seperating by fitting two 8 mm bolts with nuts when it is removed and installed or transported.

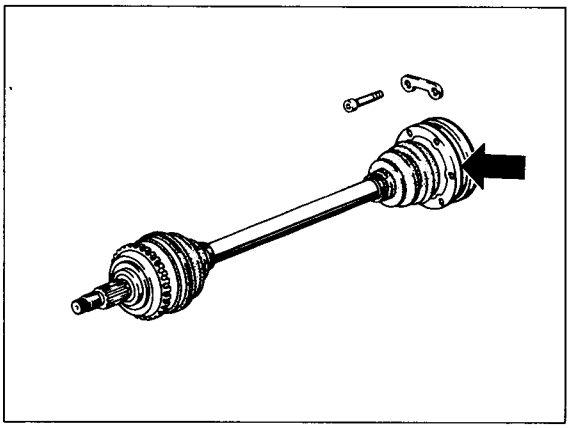

1094-40

5. Extend halfshaft.

Printed in Germany – XV, 1992

Installation

1. Coat splines, threads and stem of the halfshaft with Optimoly HT.

2. Place support plates on pan head screws and apply a thin coat of Optimoly HT to the threads.
   Put pan head screws with support plates into halfshaft flange, making sure the flange cover is not greased (accidentally).

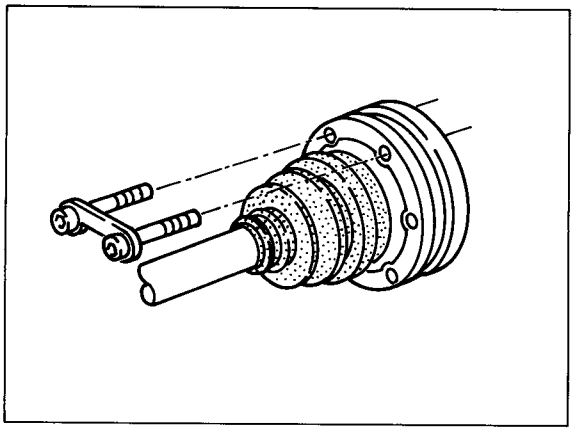

775-42

3. Put halfshaft into position and fit pan head screws.
   Coat mounting surface of new M 22 x 1.5 lock nut with Optimoly HT and fit lock nut.

4. Fit joint carrier (ball joint) to wheel carrier.
   Taper of ball joint and wheel carrier must be free from grease.
   Apply a coat of Optimoly HT to ball joint threads. Replace lock nut.

5. Fit brake cooling air duct and stabilizer mount. Replace lock nuts.

6. **Tighten all nuts and bolts to the specified torque.**
   Fit wheel and underside panel.

Dismantling and assembling spring strut

Dismantling

– Using a spring tensioner (e.g. tool supplied by Klann), preload coil spring until the piston rod is slack.

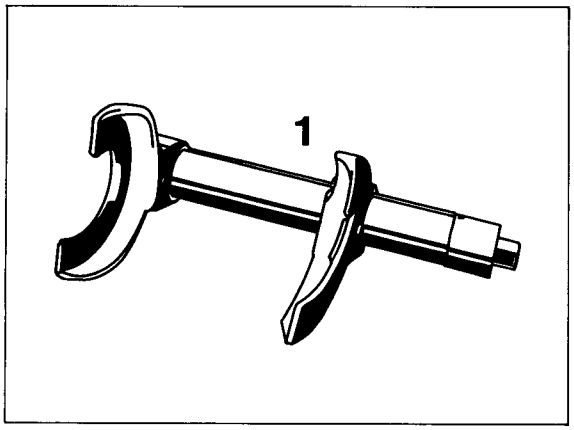

770-42

– To unbolt the bolt joint (piston rod to strut mount), use a 7 mm Allen key to keep the piston rod from turning.
Caution: Never use an impact screwdriver to undo and tighten the lock nut.

– Take all parts off the piston rod.

Note

Parts Nos. **16 to 20 and No. 2A** of the below drawing are only applicable to the Carrera RS.

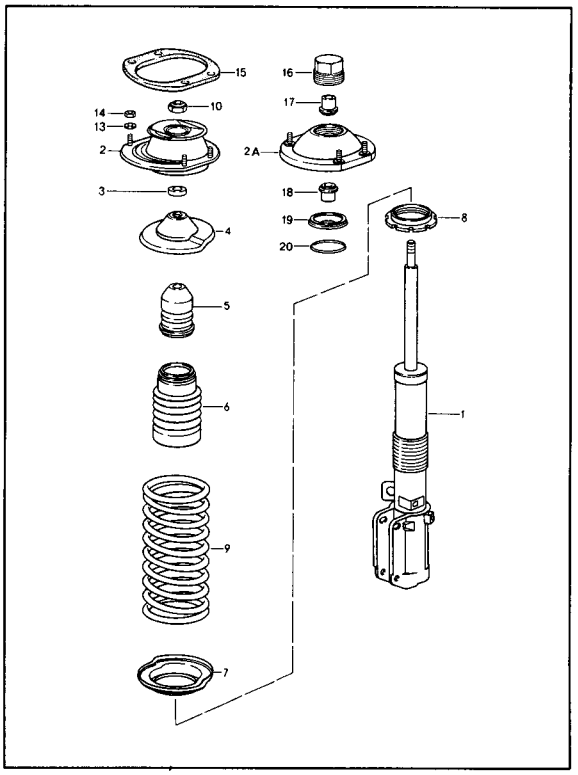

2046-40

Assembly

– Replace lock nut that secures the piston rod at the spring strut mount.
Coat threads and stem with Optimoly **HT**.

– If required (e.g. when replacing the vibration damper), set adjusting nut No. 8 into the **same position** as on the old vibration damper (transfer setting to the new damper).
Coat threads of the adjusting nut with Optimoly **TA**.

Printed in Germany XXII, 1994

– When fitting progressive-acting coil springs, make sure the **close coils** face the strut mount.

– It is recommended to replace the coil springs only in pairs.
Observe references according to spare parts catalog.

– When tightening the lock nut of the strut mount, use a semi-open socket, e.g. of the type supplied by Hazet.
In this way, the nut can be tightened exactly to the specified tightening torque of **80 Nm** (59 ftlb.). At the same time an angled 7 mm Allen key may be used to prevent the piston rod from turning.
Caution: Never use an impact screwdriver to tighten the lock nut.

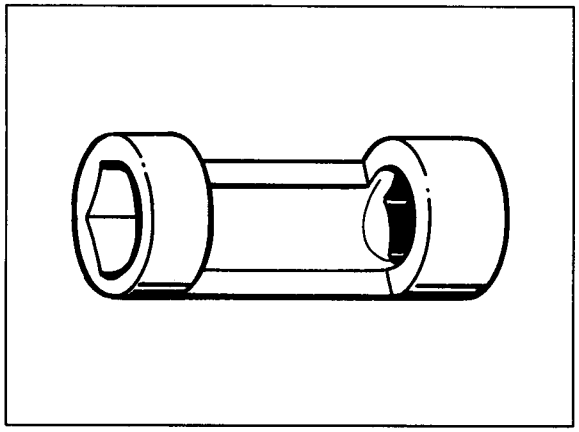

Printed in Germany XXII, 1994

Tightening torque for rear axle

Location	Thread	Tightening torque Nm (ft.lb.)
Rear axle link / spring brace		
RA link to chassis	M 14	200 (147)
Spring brace to chassis	M 14	200 (147)
Spring brace to RA link fastening	M 14	200 (147)
Camber eccentric	M 14	200 (147)
Toe eccentric	M 12	58 (43)
Retaining plate for wheel bearing	M 8	20 (15)
Holder and ground cable to RA link	M 6	10 (7,5)
Speed sensor to RA links	M 6	10 (7,5)
Brake cover plate to RA link	M 6	10 (7,5)
Brake caliper to RA link	M 12	85 (63)
Drive shaft		
to RA drive	M 8, M 10	42 (31), 80 (59)
to wheel hub	M 22	460 (340)
Lock nut	M 22	200* (147)
Stabilizer		
to chassis	M 8	23 (17)
to stabilizer mount	M 12	85 (63)
Stabilizer mount to RA	M 10	46 (34)

*Added for 911 Carrera RS. Chamfer of lock nut faces fastening nut.

Printed in Germany – XVI, 1992

Location	Thread	Tightening torque Nm (ft.lb.)
Spring strut		
Spring strut to body*	M 8 M 8	20 (15) on original version 37 (27) for recessed version**
Spring strut to rear axle trailing arm	M 14	200 (148)
Spring strut support bearing to spring strut (piston rod)	M 12	58 (43)
Plug*** of spring strut support mount (911 Carrera RS)	M 50	180***(133)
Wheel mounting		
Wheel to wheel hub	M 14	130 (96)

* Distinction between the two versions on Page 42 - 1

** 37 Nm (27 ftlb) with shouldered nut (Part number 900.380.006.02) and 3.1 mm thick washer (Part number 999.025.125.02) see Page 42 - 1. Make quite sure that no other washers/nuts are installed.

***Do not undo plug while the vehicle is on its wheels. Replace plug after removal (micro-sealed plug).

Printed in Germany – XVI, 1992

Notes on recessed spring strut mount from 1991 model on

General information

From the 1991 model on, all 911 Carrera cars have the rear-axle spring strut mounts recessed by 22 mm. As a result, the following spring strut parts have also had to be modified:

- Spring strut support bearing = modified pattern **and change in tightening torque** for bolted connection between spring strut support bearing / body
- Shock absorber (outer tube length)
- Rear axle spring
- Protective gaiter and bump stop

Distinguishing feature / change in tightening torque

– **Original version = A**
Tightening torque 20 Nm (15 ftlb)

– **Modified / recessed version = B**
Tightening torque 37 Nm (27 ftlb)
Installed with 3.1 mm thick washer (999.025.125.02) and shouldered nut (900.380.006.02)

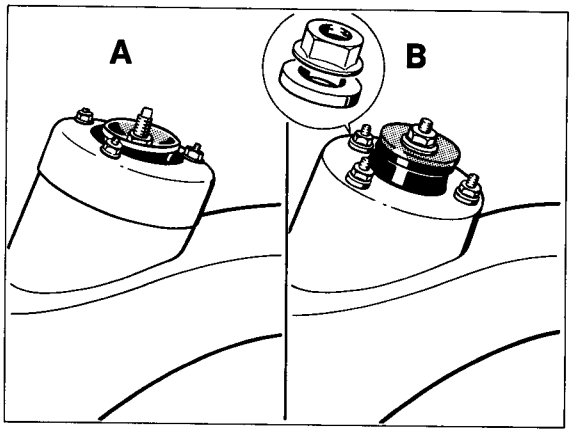

Printed in Germany – XIII, 1991

Dismantling and assembling wheel suspension

Tools

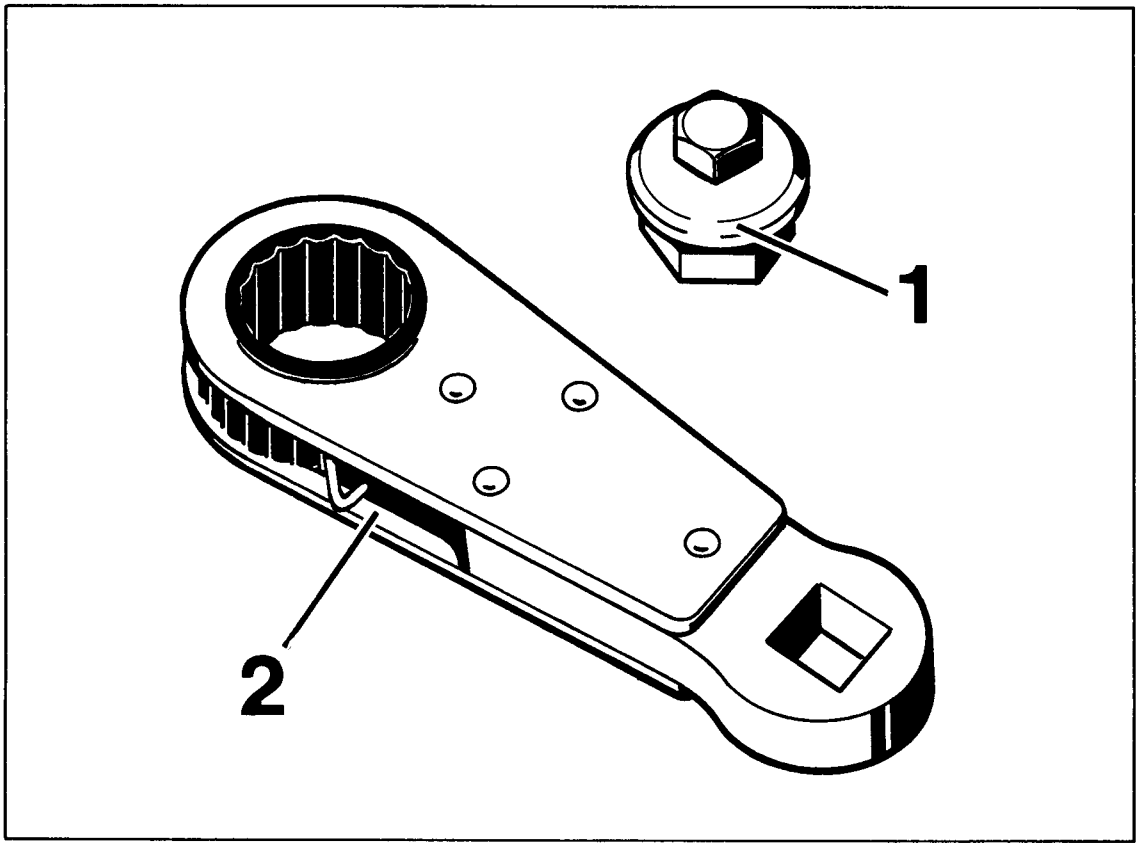

346-42

No.	Designation	Special tool	Order number	Explanation
1	Screw-in adapter	9299	000.721.929.90	
2	Ratchet torque adapter	9299/1	000.721.929.91	
–	Self-release torque wrench 1/2"			Commercial item. Required for dismantling/assembly of trailing arm along with Special Tool – No. 1 and No. 2

Printed in Germany - XIII, 1991

Dismantling and assembling wheel suspension

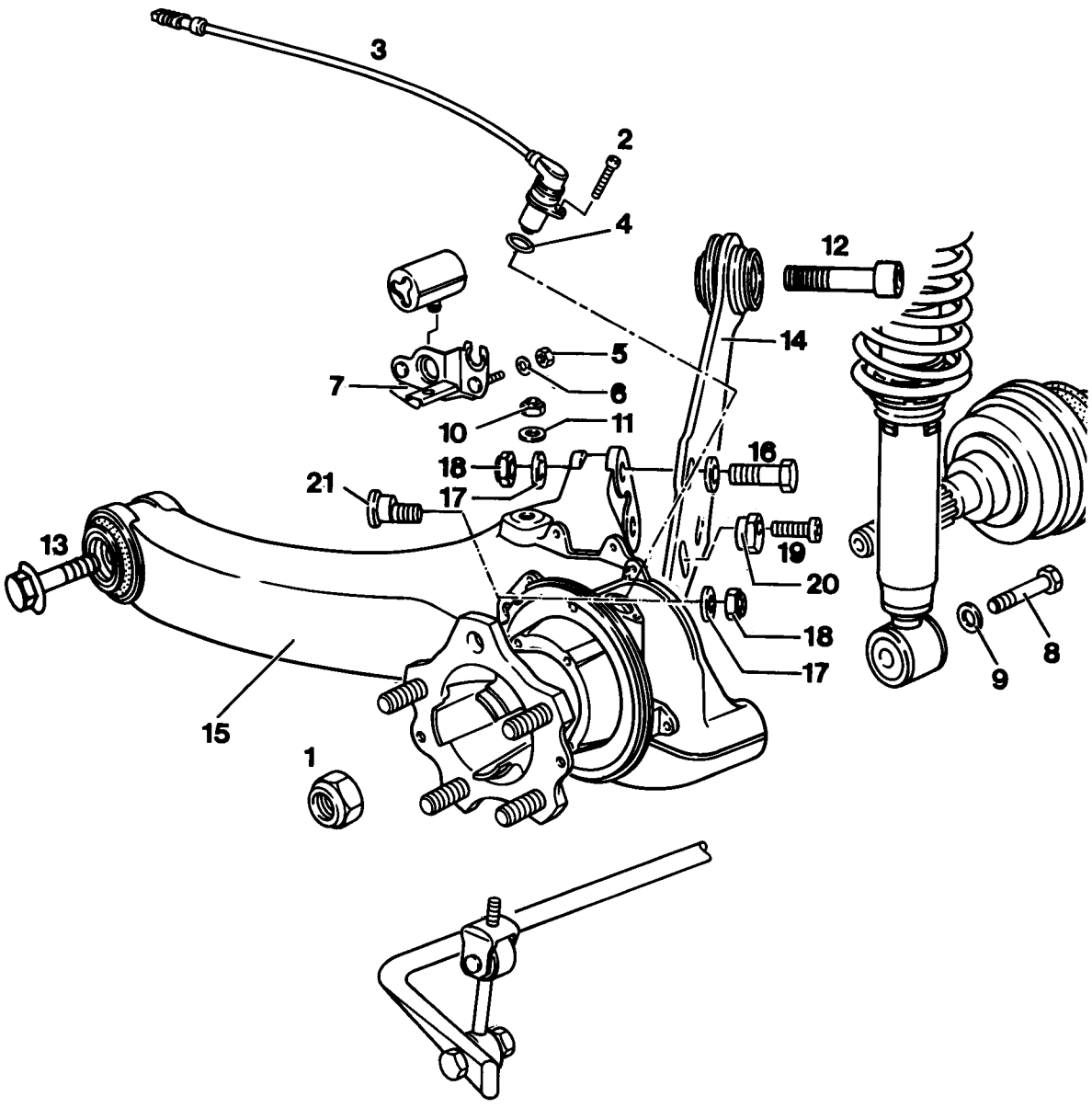

758- 42

No.	Designation	Qty.	Note: Removal	Installation
1	Lock nut M 22 x 1.5	1	Operate parking brake	Replace. Coat thread and nut mating surfaces with Optimoly HT. Tighten to 460 Nm (339 ftlb)
2	Pan head screw M 6 x 30	1		Coat thread with Optimoly TA. Tighten to 10 Nm (7 ftlb)
3	Rpm sensor	1		Coat stem with Molykote Longterm
4	Round seal	1		Replace
5	Lock nut M 6	2		Replace. Tighten to 10 Nm (7 ftlb)
6	Washer M 6	2		
7	Bracket with connector	1		
8	Hexagon head bolt M 14 x 1.5 x 100	1		Coat thread and stem with Optimoly HT. Tighten to 200 Nm (147 ftlb)
9	Washer M 14	1		
10	Lock nut M 10	1		Replace. Coat thread with Optimoly HT. Tighten to 46 Nm (34 ftlb)
11	Washer M 10	1		
12	Pan head screw M 14 x 1.5 x 100	1		Coat thread and stem with Optimoly HT. Tighten to 200 Nm (147 ftlb)
13	Hexagon head bolt M 14 x 1.5 x 120	1		Coat thread and stem with Optimoly HT. Tighten to 200 Nm (147 ftlb)

Printed in Germany - XIII, 1991

No.	Designation	Qty.	Note: Removal	Installation
14	Rear-axle spring brace	1	To remove the rear-axle trailing arm, removal of the rear-axle spring brace and of the following parts (items no. 16 to no. 21) is not required	
15	Rear-axle trailing arm	1		If the trailing arm has been separated from the rear-axle spring brace (no. 14), perform wheel alignment. Welding and straightening operations are not permitted
16	Hexagon head bolt	2		
17	Washer	5		
18	Lock nut M 14 x 1.5	3		Coat thread with Optimoly HT. Tighten to 200 Nm (147 ftlb)
19	Pan head screw M 12 x 1.5 x 35	1		Coat thread with Optimoly TA. Tighten to 58 Nm (43 ftlb)
20	Wheel toe–eccentric adjuster	1		Coat eccentric running surface with Optimoly TA
21	Camber–eccentric adjuster M 12 x 1.5 x 35	1		Coat eccentric running surface with Optimoly TA

Printed in Germany - XIII, 1991

Dismantling and assembly notes

Dismantling

1. Remove rear wheel.

2. Take lock spring (arrow) off brake hose and remove bracket (7) from rear-axle trailing arm.

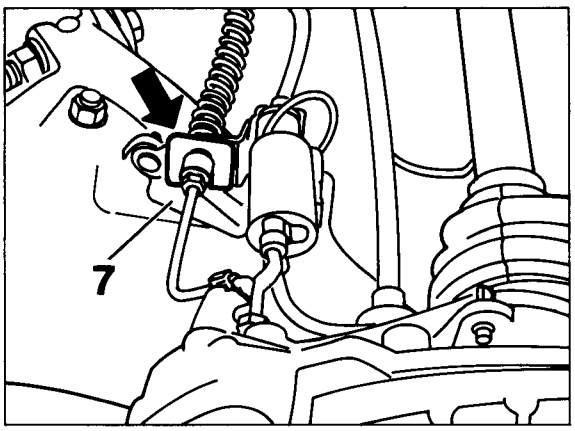

759-42

3. Unbolt brake caliper from rear-axle trailing arm and suspend at wheel housing.

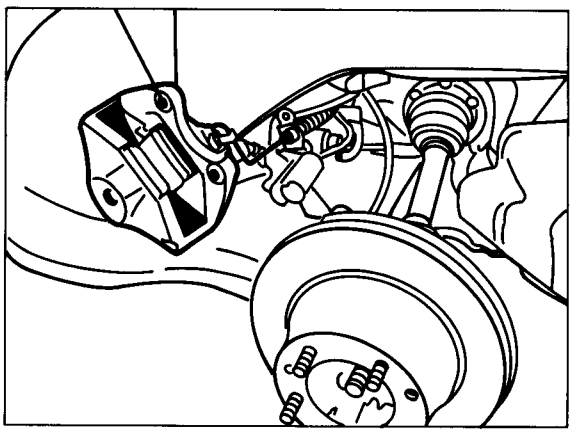

760-42

4. Remove parking brake assembly from rear-axle trailing arm.

5. Unbolt stabilizer bar mounts (arrow) from stabilizer bar. Raise rear-axle trailing arm somewhat, extend mount and let hang down.

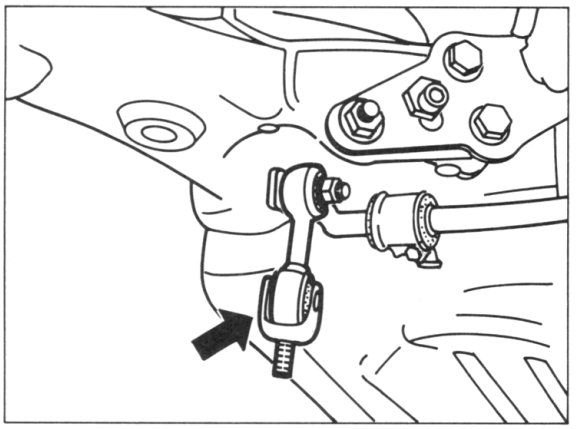

761-42

6. On the 911 Carrera with Tiptronic, disconnect connector at transmission.
Remove pan head screw with Special Tools 9299 and 9299/1 (no. 1/no. 2) in conjunction with a torque wrench (arrow).

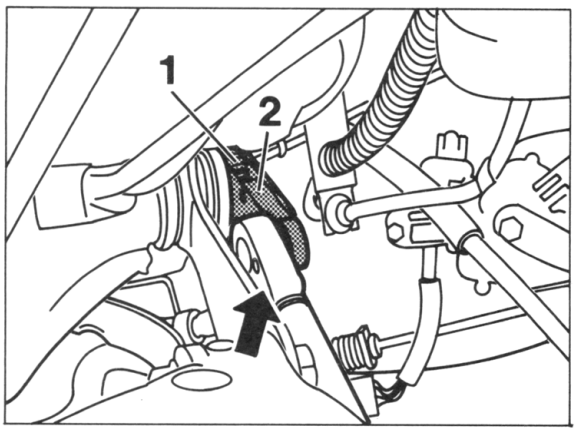

762-42

7. Remove side member panel and screw out hex bolt (13).

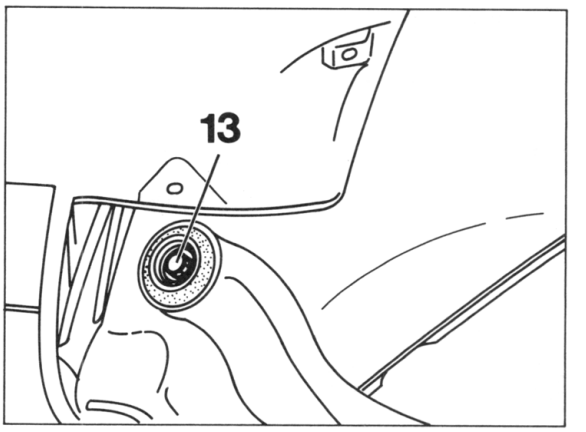

763-42

8. Suspend drive shaft at spring strut or spring strut tower, respectively, in horizontal position.

Assembly

Assemble in reverse order.

Welding or straightening work on suspension parts is not permitted.

If the rear-axle spring brace has been undone or removed from the rear-axle trailing arm or if components have been dismantled that affect vehicle height, check wheel alignment of front and rear axle.

Replacing wheel bearings

Tools

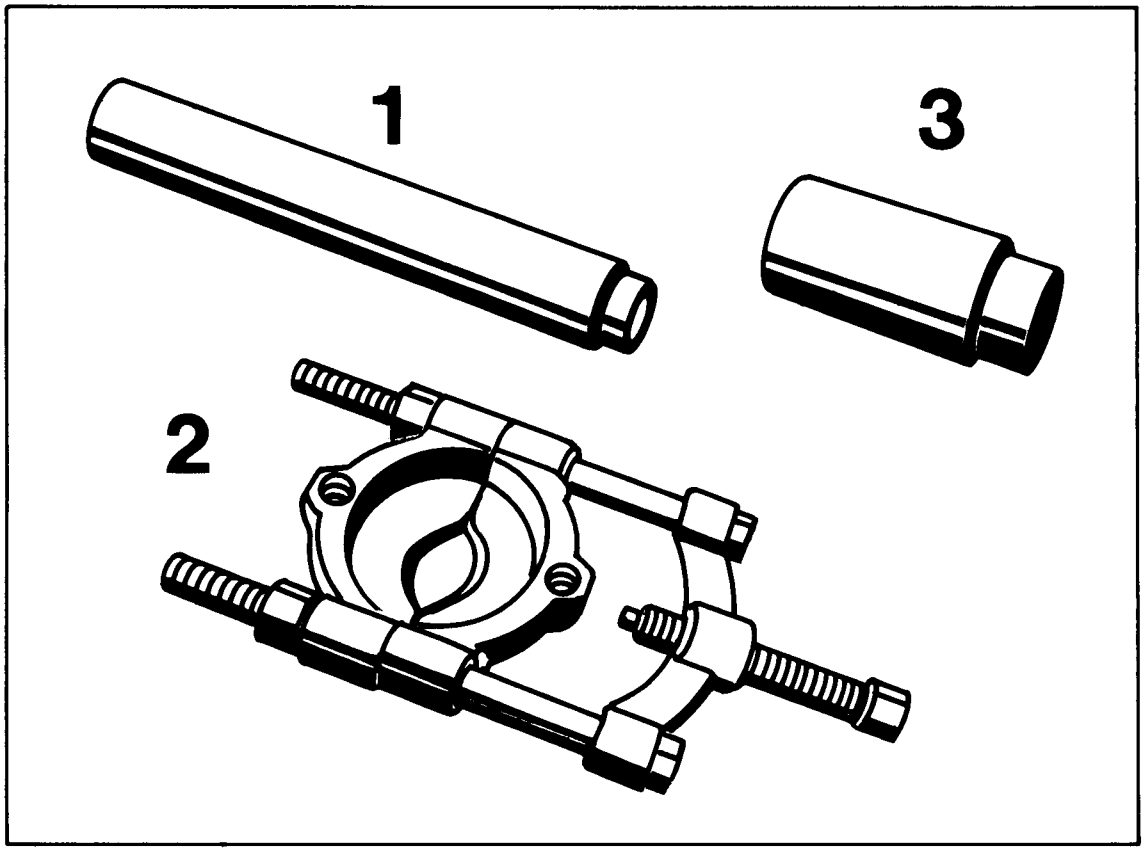

764-42

No.	Designation	Special tool	Order number	Explanation
1	Pressure piece 40 mm dia., 31.3 mm dia.	P 297 A		Used to press rear wheel hub in and out
2	Separating device			Support for wheel bearing when pressing out the rear wheel hub
3	Pressure piece 50 mm dia., 39.3 mm dia.	VW 432		To press wheel bearing in and out

Printed in Germany - XIII, 1991

Replacing wheel bearings

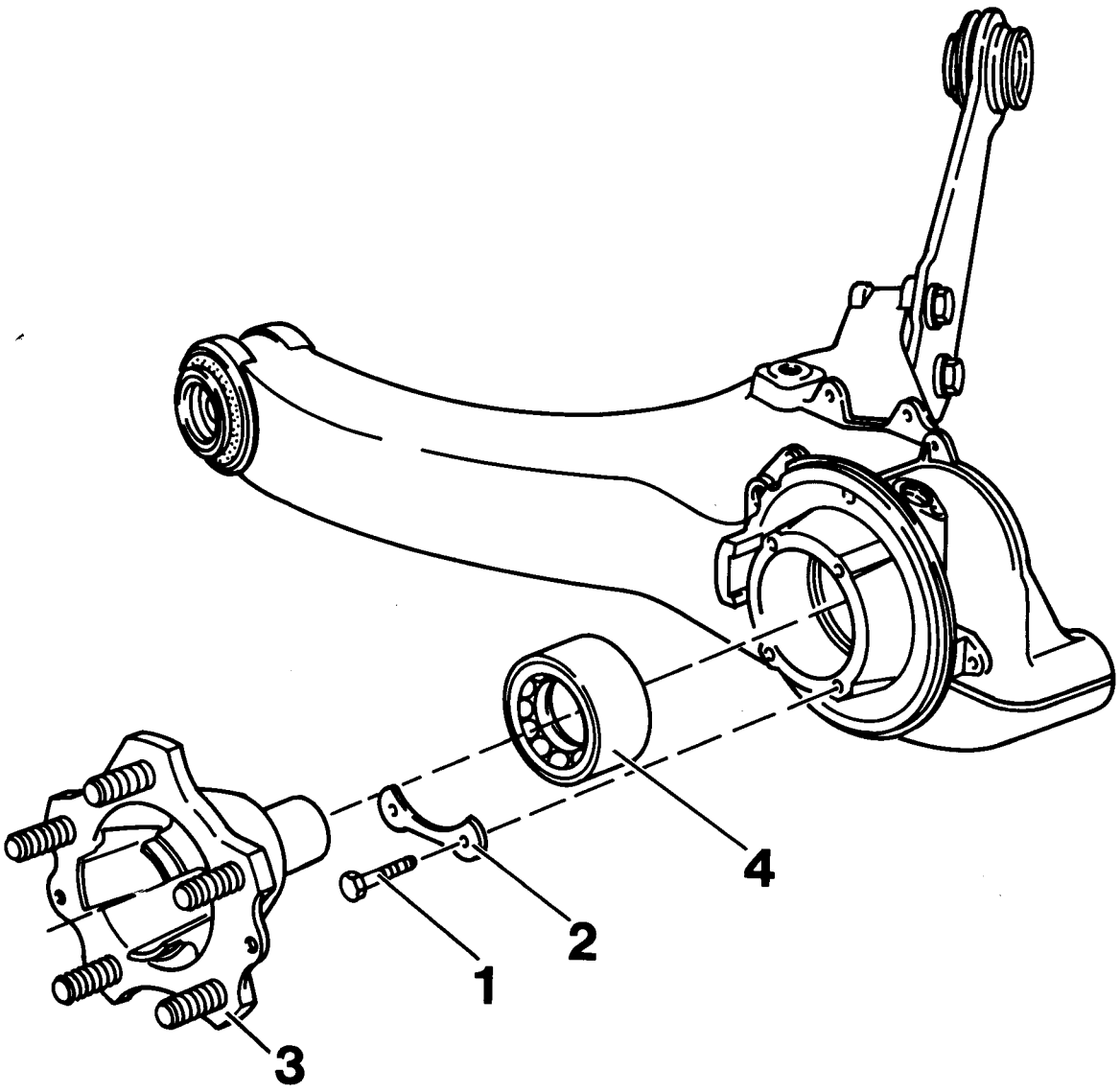

Printed in Germany - XIII, 1991

No.	Designation	Qty.	Note: Removal	Installation
1	Hexagon head bolt M 8 x 40	4		Coat thread with Optimoly TA. Tighten to 20 Nm (15 ftlb)
2	Retainer plate	2		
3	Rear wheel hub	1	Press out using a 31.3 mm dia. drift P 297 A and separating device on a hydraulic press	Press in place using 40 mm dia. drift P 297 A
4	Angular contact ball bearing	1	Heat rear-axle trailing arm to 120 – 150 deg.C. Press out angular-contact ball bearing with thrust piece VW 432 using suitable supports	Heat rear-axle trailing arm to 120 – 150 deg.C. Put new angular contact ball bearing in place and follow by pressing in lightly

Printed in Germany - XIII, 1991

Removal and installation notes

Removal

1. Press out rear wheel hub with pressure piece P 297 A (1), using separating device (2) as a support.

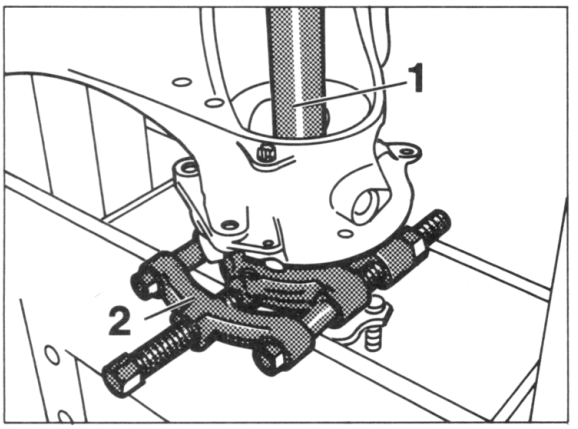

766-42

2. Heat rear-axle trailing arm to 120 – 150 °C. Press in angular contact ball bearing using pressure piece VW 432 (3) and suitable supports.

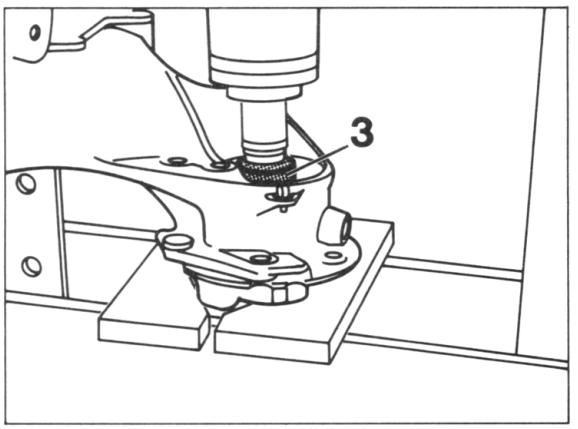

767-42

Installation

1. Prior to pressing in the wheel bearings, heat rear-axle trailing arm to 120 – 150 °C. Insert angular contact ball bearing and follow by pressing in lightly using suitable supports.

2. Insert retainer plates and tighten hexagon head bolts to 20 Nm (15 ftlb).

3. Press in rear wheel hub with pressure piece P 297 A (large diameter). Use a suitable support for the angular contact ball bearing.

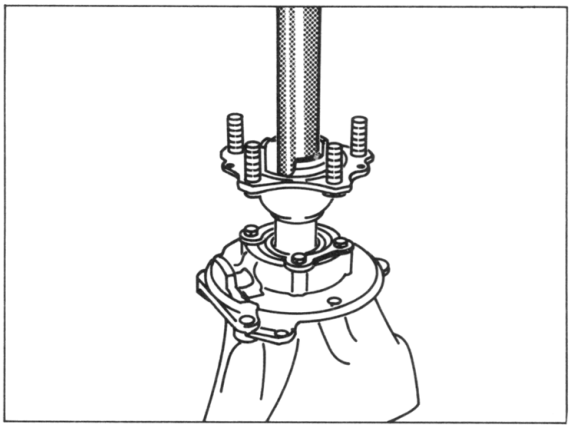

768-42

Removing and installing spring strut

Removal

1. Remove rear wheel. Undo hex bolt (arrow) from rear-axle trailing arm.

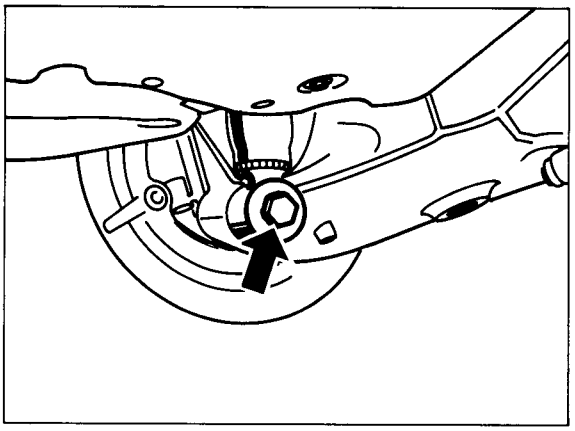

769-42

2. Remove heater blower and air cleaner, respectively.

3. Undo lock nuts M 8 (3 pc.) from spring strut support mount.

4. Extract spring spring strut from spring strut tower.

Installation

1. On cars as of MY '91, coat outside diameter of shock absorber mount with tire assembly compound. Insert spring strut into spring strut tower.

2. Use new lock nut when fitting spring strut support mount to body. Coat thread with Optimoly HT.

A = Initial version
Tightening torque 20 Nm (15 ftlb).

B = Revised / lowered version as of MY' 91
Tightening torque 37 Nm in conjunction with 3.1 mm washer (999.025.125.02) and collar nut (900.380.006.02).

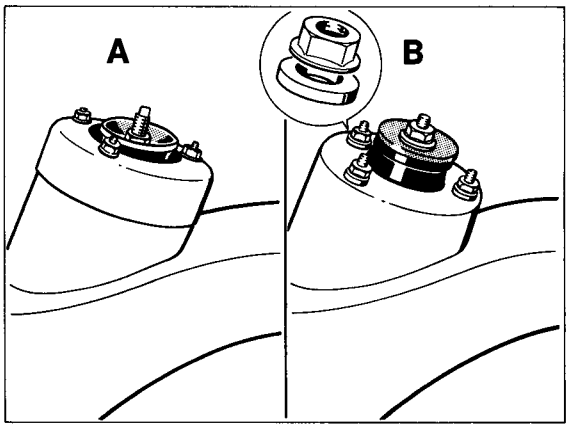

635-42

3. Install heater blower and air cleaner, respectively.

4. Fit shock absorber to rear-axle trailing arm, coating the hexagon head bolt (M 14 x 1.5 x 100) with Optimoly HT along thread and stem, and tighten to 200 Nm (147 ftlb).

5. When fitting new parts that affect vehicle height, check alignment of front and rear axle.

Printed in Germany - XIII, 1991

Dismantling and assembling spring strut

Tools

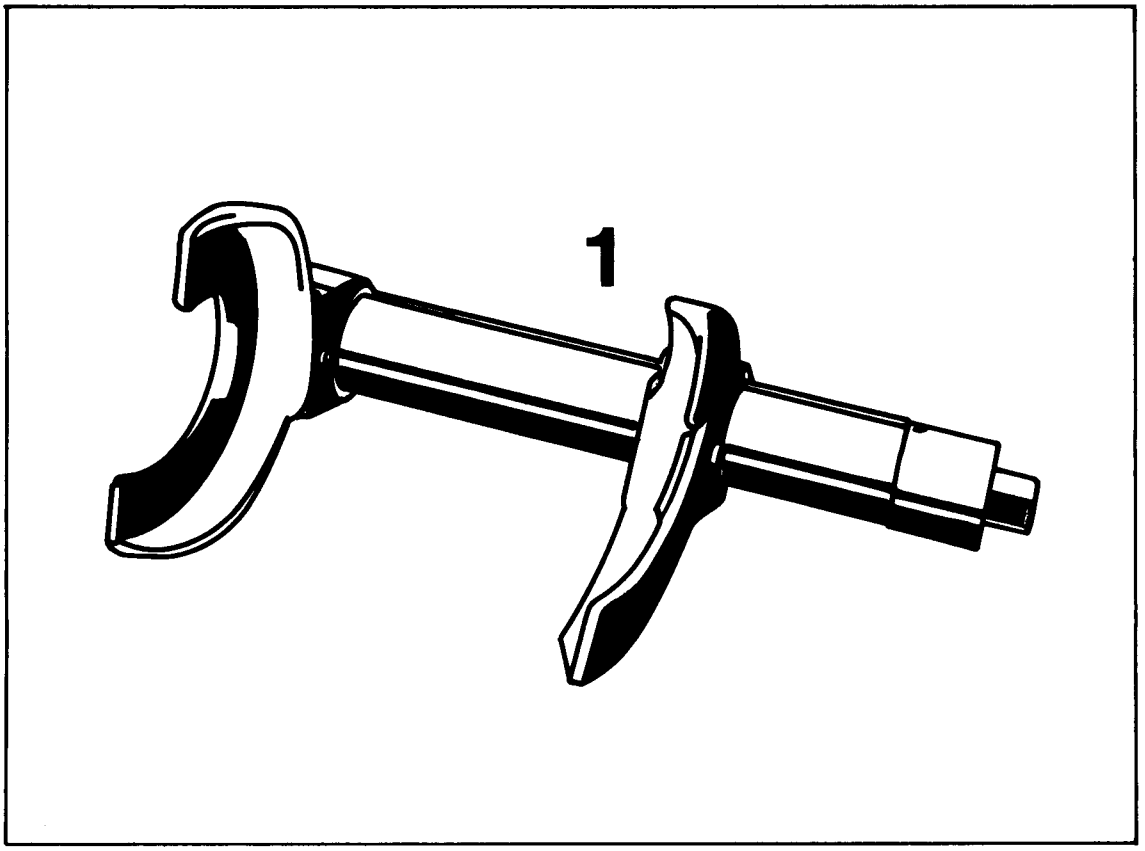

770-42

No.	Designation	Special tool	Order number	Explanation
1	Spring tensioner e.g. supplied by Klann			Commercially available

Printed in Germany - XIII, 1991

Dismantling and assembling spring strut

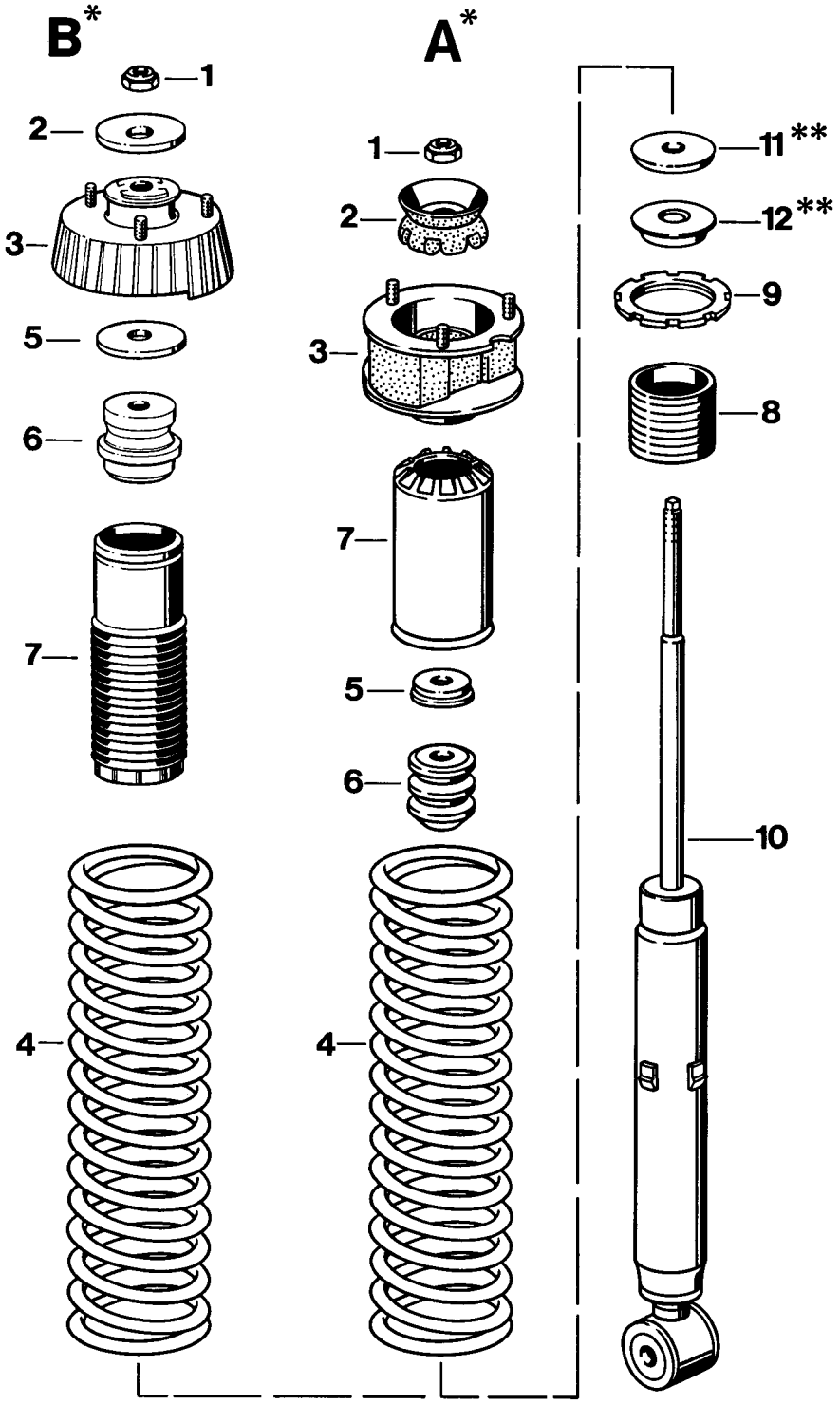

* A = Initial version B = Modified version as of Model '91

** Only present with version A

Printed in Germany – XVI, 1992

Version A (initial version)

No.	Designation	Qty.	Note: Removal	Installation
1	Lock nut M 12 x 1.5	1	Before undoing the lock nut, preload coil spring with spring tensioner and take load off piston rod	Use new lock nut. Coat thread with Optimoly HT. Tighten to 58 Nm (43 ftlb)
2	Shock absorber mount	1		
3	Spring strut mount	1		
4	Coil spring	1		
5	Support ring	1		Install in correct position
6	Auxiliary spring	1		Observe references acc. to spare parts catalog
7	Protective tube	1		
8	Threaded bushing	1		Coat thread with Optimoly TA
9	Adjuster nut	1	Record adjusting distance (position)	Coat spring mounting face with Optimoly TA. Install in correct position (guide pointing towards spring)
10	Vibration damper	1		Observe references acc. to spare parts catalog
11	Thrust washer	1		Install with grooves facing down
12	Support cover	1		

Printed in Germany – XVI, 1992

Version B (as of Model '91)

No.	Designation	Qty.	Note: Removal	Note: Installation
1	Lock nut M 12 x 1.5	1	Preload coil spring with spring tensioner before undoing the lock nut and unload piston rod	Use new lock nut. Coat threads with Optimoly HT. Tighten to 58 Nm (43 ftlb)
2	Washer	1		Install in correct position
3	Strut mount	1		Coat with tire assembly compound along outside diameter
4	Coil spring	1		Observe references acc. to spare parts catalog
5	Washer	1		Install in correct position
6	Auxiliary spring	1		Observe references acc. to spare parts catalog. Fit at protective bellows (No. 7)
7	Protective bellows	1		
8	Threaded sleeve	1		Coat threads with Optimoly TA
9	Adusting nut	1	Record adjustment setting (position)	Coat spring contact surface with Optimoly TA. Install in correct position (guide must point towards spring)
10	Vibration damper	1		Observe references acc. to spare parts catalog

Printed in Germany – XVI, 1992

Dismantling and assembly notes

Dismantling

1. Preload coil spring with spring tensioner until the load is taken off the piston rod.

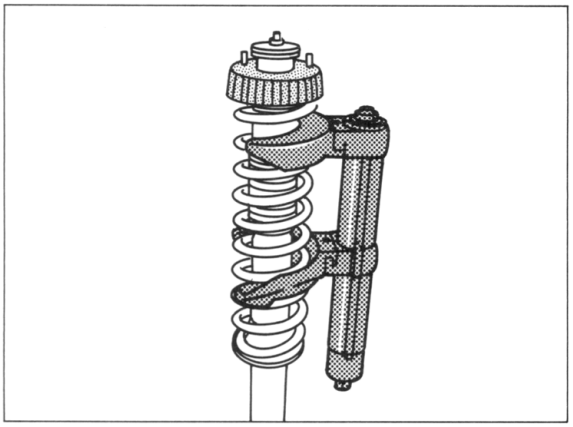

772-42

Note

As of MY '91, the following modified spring strut parts are used in conjunction with the lowered spring strut towers:

– vibration damper (length of container tube),

– coil spring,

– protective bellows and auxiliary spring.

Assembly

It is recommended to replace the coil springs only in pairs.

When assembling, observe correct position of shock absorber eye (mounting at trailing arm) relative to strut mount.

Install washers No. 2 and No. 5 (only present with version B) in correct position.

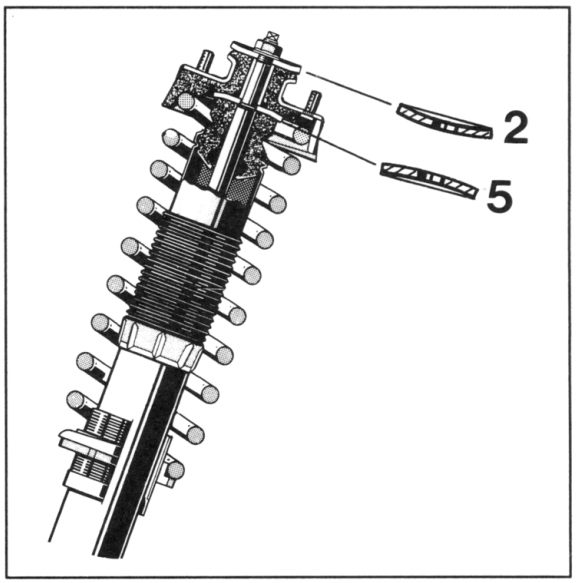

1226-42

When fitting new parts that affect vehicle height, check alignment of front and rear axle.

Removing and installing drive shaft

Removal

1. Remove wheel.

2. Remove underside panel.

3. Actuate parking brake and unbolt M 22 x 1.5 lock nut from drive shaft.

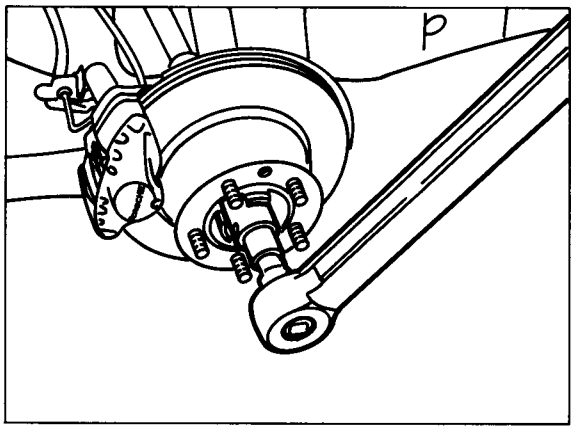

773-42

4. Unbolt drive shaft pan head screws from transmission flange.

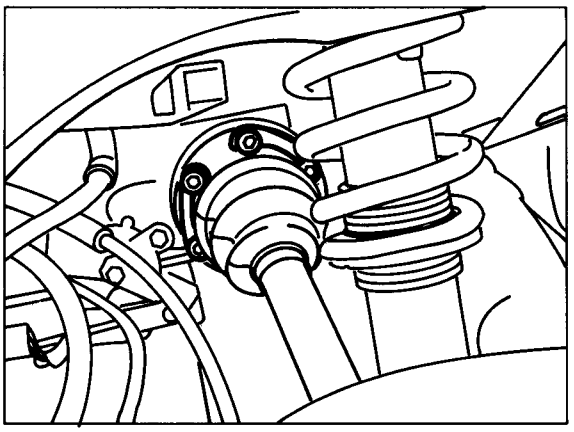

774-42

5. Pull out drive shaft in downward direction.

Installation

1. Coat teeth, thread and stem of drive shaft with Optimoly HT.

2. Put shims on pan head screws and coat threads lightly with Optimoly HT.
   Insert pan head screws with shims into drive shaft flange, making sure the flange cover is not greased inadvertently.

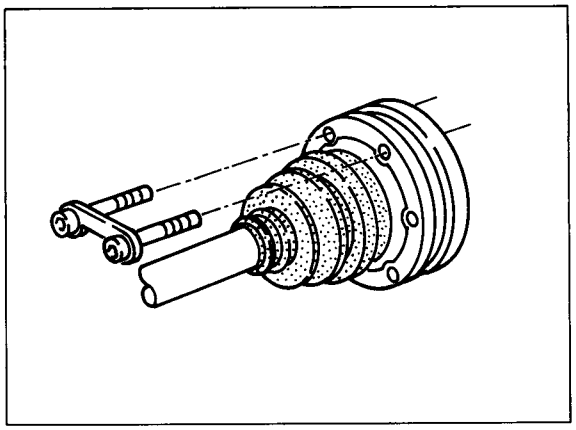

775-42

3. Introduce drive shaft and tighten pan-head screws to 42 Nm (31 ftlb) (M 8) or 80 Nm (59 ftlb) (M 10), respectively.

4. Coat seating surface of new M 22 x 1.5 lock nut with Optimoly HT and tighten to 460 Nm (339 ftlb).

5. Refit underside panel.

6. Fit wheel.

Printed in Germany - XIII, 1991

Wheels and tires

Tire condition / tire pressure

Tires are safety-relevant items that are only capable of meeting the requirements imposed if they are run at the correct tire pressure and with sufficient tread depth.

The tire pressures indicated are minimum pressures. The tires must never be run at lower pressures since this affects roadholding adversely and may lead to severe tire damage.

Valve caps protect the valve against dust and dirt and therefore help prevent leaks. Always screw on caps tightly and replace missing caps.

For safety reasons, do not limit tire checks to checking the tire pressure but also check for sufficient tread depth, ingress of foreign matter, pinholes, cuts, tears and bulges in the sidewall (cord breakage)!

Tire pressure of cold tires (approx. 20°C) (summer and winter tires)

16 inch wheels	
front	2.5 bar pos. pressure
rear	3.0 bar pos. pressure
17 inch wheels	
front	2.5 bar pos. pressure
rear	2.5 bar pos. pressure
	3,0 bar pos. pressure with 275/35 ZR 17 tires
Collapsible spare tire	
front/rear	2.5 bar pos. pressure

Tire and wheel survey / tire specification character

For a tire and wheel surview for summer and winter tires, refer to the relevant Technical Information (TI), Group 4.

When replacing summer tires, check for the correct tire specification character. The specification characters N 2, N 1 or N 0, respectively, help to distinguish summer tires approved by Porsche from other versions of identical tire type and the same tire size. The tires approved by Porsche are also identified in the corresponding TI.

Printed in Germany – XXI, 1994

Suspension alignment settings

The following specifications refer to the curb weight to DIN 70020. This means: Full fuel tank, spare tire and tools in vehicle.
Differing settings for U.S. vehicles are given in brackets.

Front axle

	Carrera 2/4	Turbo-Look America-Roadster	Carrera RS	Carrera RS America	Speedster
Height adjustm.* **mm**	165 ± 10 (175 ± 10)	165 ± 10 (175 ± 10)	125 ± 5	175 ± 10	165 ± 10 (175 ± 10)
max. left—to-right difference **mm**	10	10	5	10	10
Toe, unpressed (total)	+ 25' ± 5'	+ 25' ± 5'	+ 25' ± 5'	+ 15'± 5'**	+ 15' ± 5'
Toe difference angle at 20° steering lock Can be modified only by replacing the steering arms	- 40' ± 30'	- 1° 20' ± 30'	- 1° 50' ± 30'	- 40' ± 30'	- 40' ± 30'
Camber (with wheels in straight ahead position	0° ± 10'	0° ± 10'	- 1° ± 10'	- 15' ± 10'**	- 15' ± 10'
max. left-to-right difference	10'	"	"	"	"
Caster ***	4° 25' + 15' - 30'	"	"	"	"
max. left-to-right difference	15'	"	"		"

* From road surface contact area of wheel to outer mounting hex bolt - "Crossmember to body".

** Modified values that are also applicable retroactively.

*** The tolerance of the caster setting was changed during the 1992 MY from 4°25' ±15' to **4°25' (+ 15', – 30')**. The modified tolerance is also applicable retroactively.
The specified – max. left-hand to right-hand difference of 15' – remains valid.

Printed in Germany – XXI, 1994

Rear axle

Differing settings for U.S. vehicles are given in brackets.

	Carrera 2/4	Turbo-Look America-Roadster	Carrera RS	Carrera RS America	Speedster
Height adjustment:					
From road contact surface to meas. point at control arm **mm**	258 ± 5 (268 ± 5)	258 ± 5 (268 ± 5)	223 ± 5	268 ± 5	258 ± 5 (268 ± 5)
From road contact surface to meas. point at outer control arm mount **mm** (body side)*	270 ± 5 (280 ± 5)	270 ± 5 (280 ± 5)	235 ± 5	280 ± 5	270 ± 5 (280 ± 5)
max. left-to-right difference **mm**	10	10	5	10	10
Toe-in per wheel	+ 10' ± 5'***	"	"	"	"
max. left-to-right difference	10'	"	"	"	"
Camber	- 40' ± 10'***	-45' ± 10' (- 45' max. – 55' min. – 15')	- 1° 15' ± 10'	- 45' max. - 55 min. - 15'**	- 45' ± 10' (- 45' max. - 55' min. - 15')
max. left-to-right difference	20'	"	"	"	"

* Use this measuring point if it is provided (refer to page 44 - 4).

** Modified values that are also applicable retroactively.

*** **Modified rear-axle settings** (camber and toe-in) for service. **Former settings:** Toe-in (per wheel) = + 15' ± 5' / camber = - 20' ± 10'
The **new values** are applicable **retroactively** to suspension alignment operations on all Carrera 2/4 vehicles from the start of production.

Printed in Germany – XXI, 1994

Sample measuring chart*

Note

The measuring chart is not applicable to the 911 RS America. Modify the measuring chart as required.

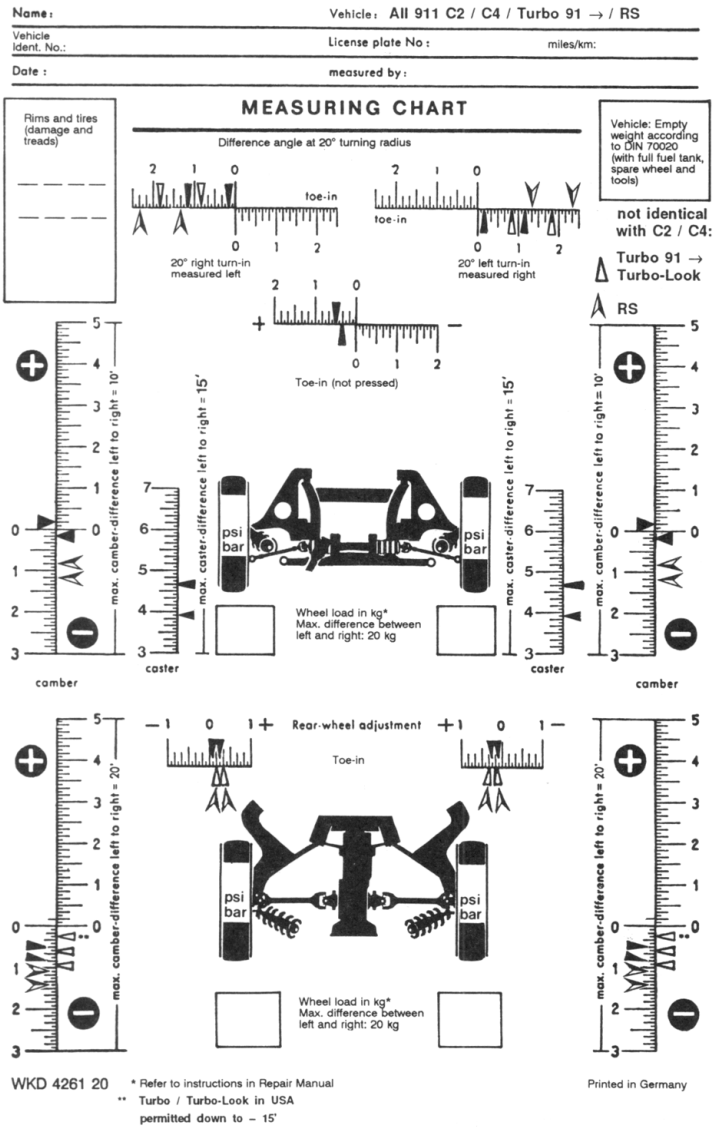

* The tolerance of the caster setting was changed during the 1992 MY from 4°25' ±15' to 4°25' (+ 15', - 30'). The modified tolerance is also applicable retroactively.
The specified maximum left-to-right difference of 15' remains valid.

Fitting 16" and 17" cup design wheels to the vehicle

In the case of the 16" and 17" cup design wheels, the valve (No. 1) and the locking wheel nut cannot be arranged on the same side (as on previous models).

For correct installation, the valve (No. 1) must face the color-coded stud (No. 2). Be sure to fit the locking wheel nut to the color-coded stud (No. 2).

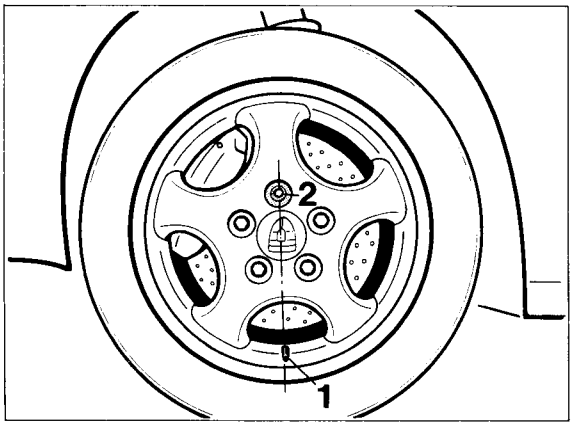

583-44

If required, mark the wheel stud located opposite the valve before removing the wheel.

For stationary balancing of the wheels (with step rings), turn the wheel in such a manner that the valve points to the bottom. Tighten the wheel in this position.
After balancing, mount the wheel to the vehicle in an identical position (valve faces to the bottom / color-coded wheel stud and locking wheel nut located on top).

Important note

Fitting (and tightening) procedures **of all other wheel types (16-inch Design 90 etc.)** for stationary balancing **remain unchanged.**

This means: Coded stud, valve and locking wheel nut are located on the same side. When tightening, valve must point up (same position as on balancing equipment).

Printed in Germany – XIII, 1991

Wheel Alignment

Tools

88/486

No.	Description	Special Tool	Order Number	Remarks
-	Excentric socket	9265	000.721.926.50	
-	Switchover socket-type ratchet	9265/1	000.721.926.51	

Printed in Germany – III, 1989

Wheel Alignment

General Information

Wheel alignment is applicable for both the 911 Carrera 4 and 911 Carrera 2.

Check wheel alignment of a vehicle with an optical or electronic alignment tester. Procedures are described in the operating instructions supplied with a pertinent tester. The following requirements must be fulfilled prior to checking the wheel alignment.

- Vehicle at curb weight according to DIN 70020, which means a ready-to-drive vehicle with full fuel tank, spare wheel and tools.

- Correct joint and wheel bearing play (wheel bearing play cannot be adjusted).

- Specified tire inflation pressure; uniformly worn tire treads.

If both front and rear wheel alignment has to be checked, first check or adjust wheel positioning values on the rear axle.

It is recommended or necessary* to check the height adjustment at DIN curb weight before the wheel positioning values of the front and rear axles can be adjusted.

Left to right wheel load differences can be kept as small as possible due to the possibility of adjusting the car ride level height, insofar as wheel load scales are available. The wheel load difference is adjusted by changing the car ride level height within height tolerances. A small as possible left to right wheel load difference is preferred.

* After completion of work which caused changes in height or with a wrong height.

Printed in Germany – III, 1989

Important Information for Working on Wheel Alignment of Vehicle

Conform with the following points when checking/adjusting wheel alignment.

Height Adjustment / Wheel Load Change

Changing the height on one side will simultaneously cause a change in wheel load.
A wheel load change on one wheel will also change the wheel loads of the other wheels.

Wheel loads are increased by increasing the installed spring preload on one side (vehicle lifted).

Wheel loads are reduced by reducing the installed spring preload on one side (vehicle lowered).

Wheel load changes are always transmitted diagonally to the other axle side. In other words, when the wheel load is reduced or increased on one wheel, the same thing happens on the diagonally opposite wheel.

Example

Left rear spring preload C is increased.

This causes the wheel load

- to increase at left rear C and right front B and

- to decrease at right rear D and left front A.

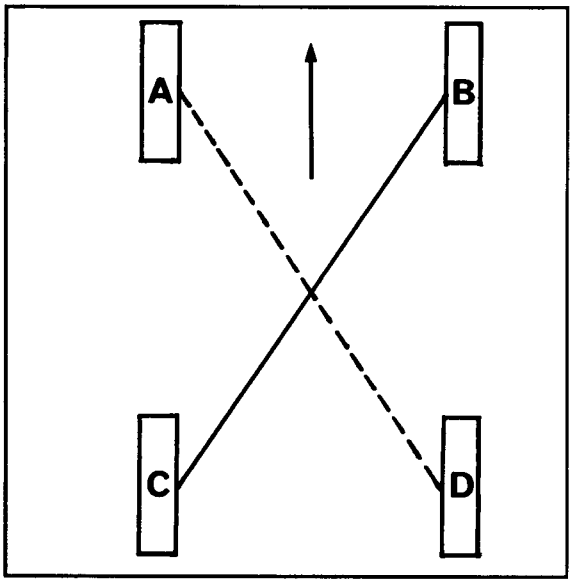

44-3

The left to right wheel load difference should be as small as possible on the front and rear axles (less than 20 kg (44 lbs.) whenever possible).

Printed in Germany – III, 1989

Checking / Adjusting Height

Note

Adjusting can be used to correct different left to right wheel loads. With correct ride level height the wheel load differences will be within permissible tolerances, insofar as coil springs have the same installed length (installed spring preload) on each axle.
Tolerances: ± 1mm.
Wheel load differences can be kept as small as possible in conjunction with wheel load scales. Left to tight tolerances on front and rear axles less than 20 kg (44 lbs.).

Park car on a level surface or test station to check the ride level height. Car ready-to-drive with full fuel tank, spare wheel and tools. Bottom the suspension at front and rear of car 2 or 3 times and let the springs return the car to its height.

Front Axle

Measure the distance from the point of wheel/ floor contact to the outer cross member-to-body bolt head's lower edge.

See page 44 - 02 for front alxe (V) and rear axle (H) specifications.

Rear Axle

Measure the distance from the point of wheel/ floor contact to the body end measuring surface on the outer arm mount (arrow with A). Some cars do not have this measuring surface. In such cases the cast boss on the rear axle arm (arrow without A) must be used as a measuring point.

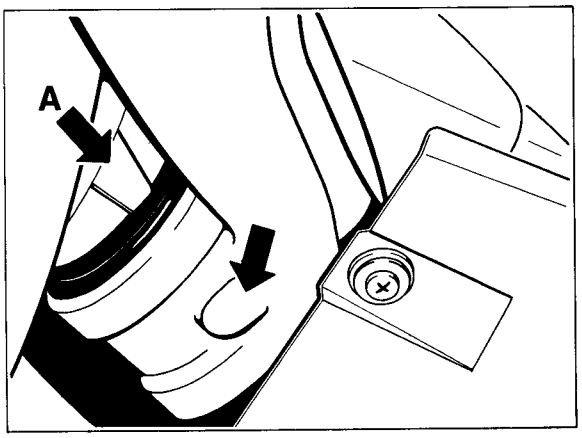

The car ride level height is adjusted **on the rear and front axles** by turning the adjusting nut on the bottom spring retainers. Use a hook-type wrench or Special Tool VW 637/2 (lever) for this purpose.

Adjusting Nut
- turned clockwise = car higher
- turned counterclockwise = car lower

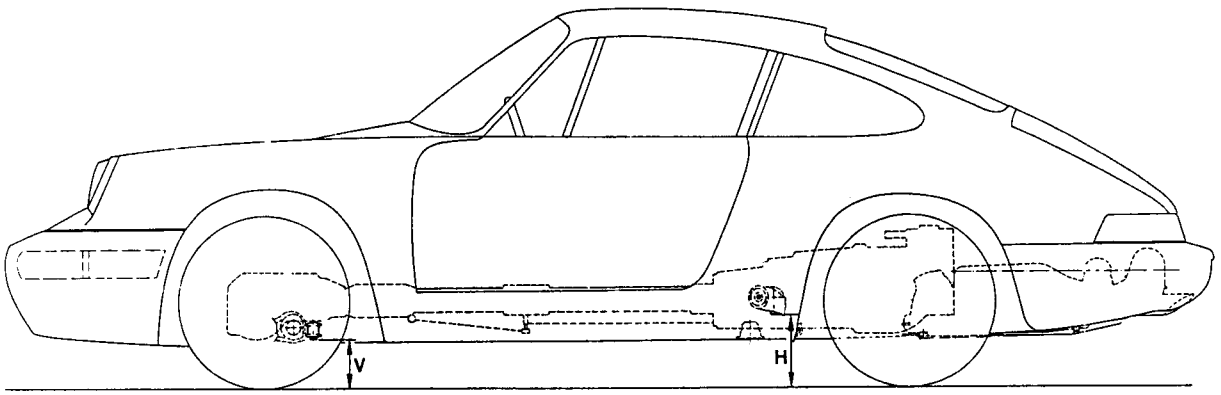

Printed in Germany – III, 1989

Wheel Positioning

Notes

Check and adjust wheel positioning values only with the specified requirements (see General Information on page 44 - 2).

If front and rear wheel alignment of a car is to be checked, first check and adjust the rear axle.

Tighten the corresponding bolts or nuts with specified torque (see tables in Repair Groups 40 and 42) after adjusting.

Front Axle

Prepare the car for checking and adjusting of the wheel positioning values. Place front wheels on rotating plates or something similar. Bottom front and rear wheel suspension of car 2 or 3 times and have spring force move the car up to ride level height each time.

Adjusting Camber

Camber is adjusted by displacing the spring strut to the wheel carrier. This requires unscrewing two mounting bolts with Special Tool 9265/1.

88/486

Apply excentric socket 9265 on the upper mounting bolt head (fillister head bolt) and turn to adjust the camber.

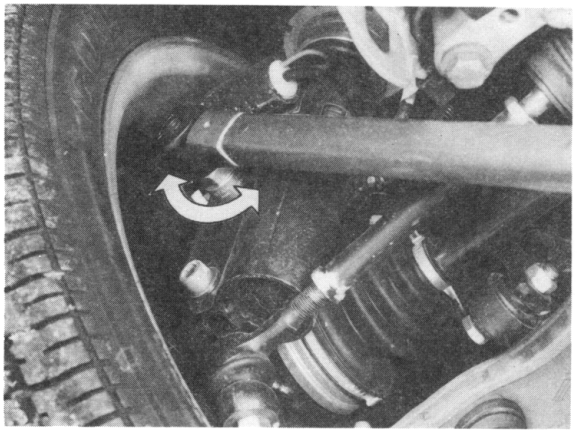

88/468

Adjusting Caster

Unscrew bolted connection between link carrier and control arm (arrows).

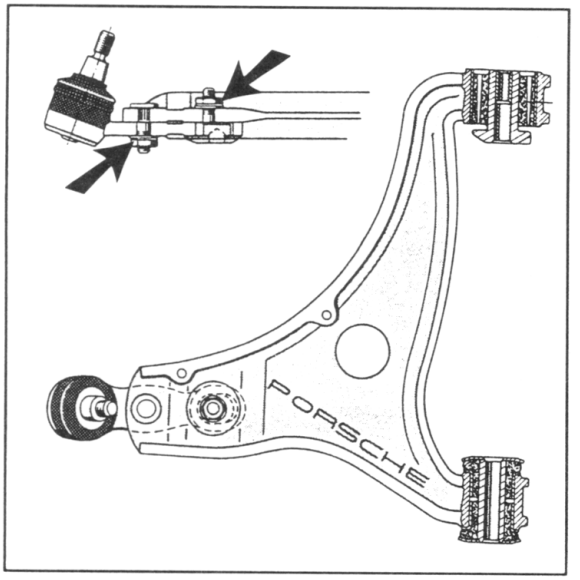

694

Adjust caster by turning the caster excentric and therefore displacing the link carrier forward or back.

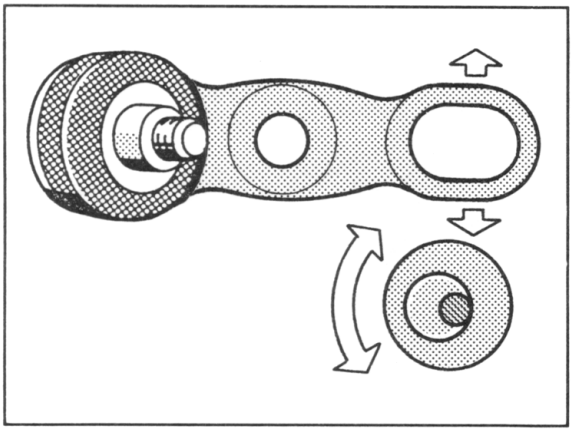

707

Adjusting Toe

Preparation: Check whether steering wheel is offset to the steering gear. This requires removing the floor trim panel and centering the steering gear in middle position with Special Tool 9116. Attempt to have the best value when transferring the steering wheel, if necessary.
Remove Special Tool 9116 afterwards.

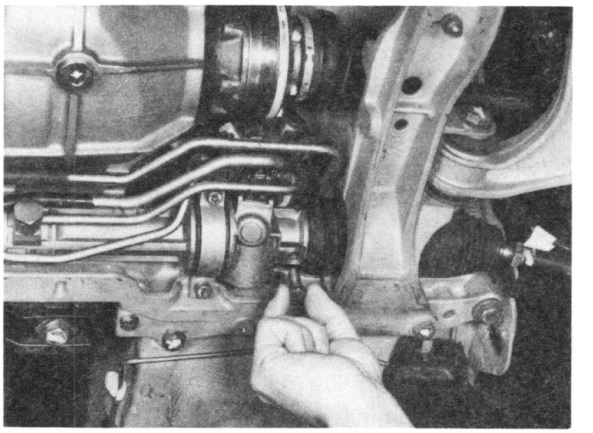

88/406

Clamp steering wheel in the middle position with the steering wheel holder and adjust toe on the tie rods.
Make sure the bellows in question is **not twisted** (damaged).

Note

After tightening the tie-rod lock nuts, the **tie-rod ends** of both tie-rods must be **in a horizontal position**.
The bellows on the tie-rods must **not be twisted**. Check and turn bellows into correct position if required.
A **damaged** bellows must be **replaced** as the steering gear may otherwise be damaged by dirt ingress.

Toe Difference Angle

The toe difference angle cannot be adjusted (it can only be influenced by replacing the steering arms).

Rear Axle

Adjusting Camber and Toe

Remove rear floor trim panel.

Unscrew spring strut and arm bolted connection.

Bottom front and rear wheel suspension of car 2 or 3 times and allow the spring force to raise the car to the ride level height each time.

Camber is adjusted by turning excenter 1 and toe by turning excenter 2.

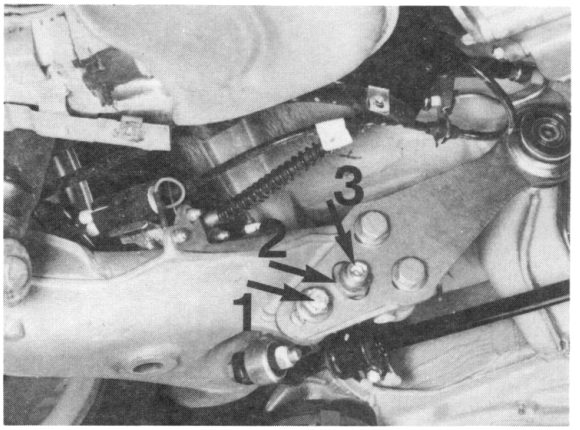

88/403

1 Camber excenter = adjustment via hexagon socket (arm end)

2 Toe excenter = adjustment via hexagon

3 Toe excenter mounting screw

Printed in Germany – XX, 1993

Tire fitting

The following assembly and dismantling procedures refer to the 17-inch Cup and Cup Design wheels with asymmetric hump.

Notes / tools

– For mag wheels (911 Carrera RS), pay particular attention so as not to damage the paintwork, including the hump area. If required, cover the rim flange with adhesive tape after the pressing off stage.

– To remove / fit a tire, a tie-down tool – Special Tool 9539 – is required. In addition, the tire lever should be flattened along its front face and should then be rounded (arrow).

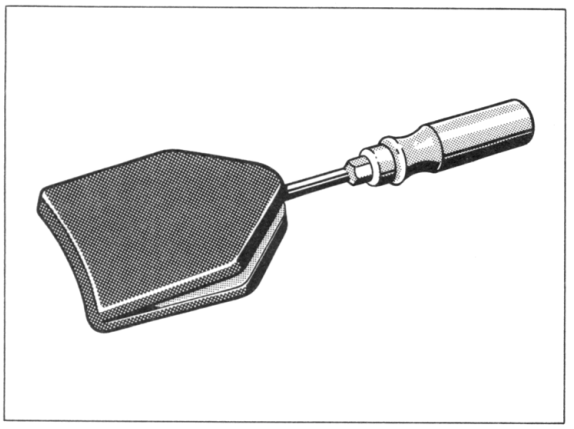

1012 - 44

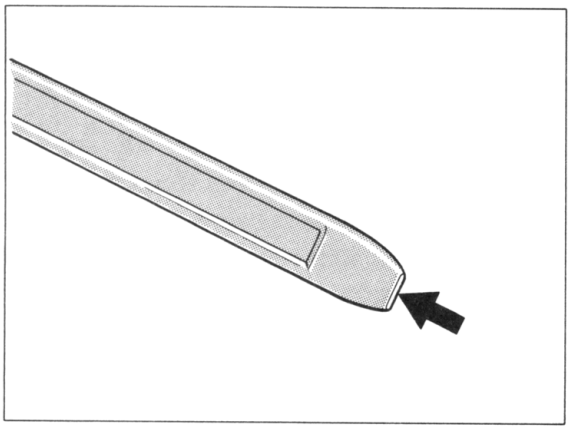

1013 - 44

Tire assembly

– Fit wheel to assembly stand and coat inside of wheel and both tire beads with tire assembly compound.
Replace the valve whenever a tire is fitted or refitted.
Note
Recommended tire assembly compound:
Use only Contifix **or** TIP TOP Universal, Part No. 593 0601 (3.5 kg can).

– Set assembly tool to correct clearance.

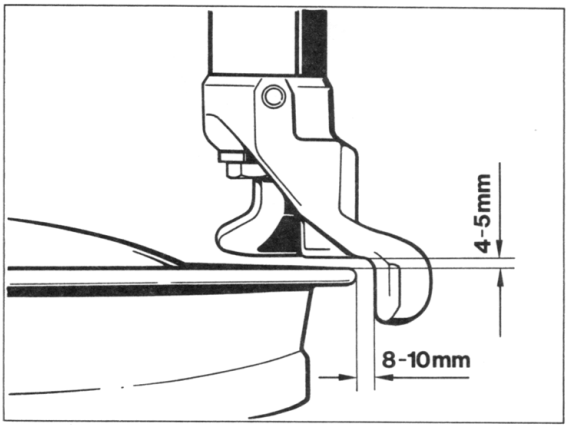

1014 - 44

– Fit first tire bead in the usual manner.

Note

The asymmetric hump changes its cross-section across the circumference.
The following points must therefore be observed when fitting or removing a tire.

Printed in Germany – XVIII, 1992

– When starting to fit the **second bead,** the assembly arm should be located **opposite the valve.** Then place the second bead as flat as possible onto the wheel, guide it across the assembly head and tie it down with Special Tool 9539, keeping it offset by approx. 90 to 120 deg.

While performing the turning motion and fitting the **second bead,** use a second tire lever and Special Tool 9539 to locate the tire bead in the drop center.

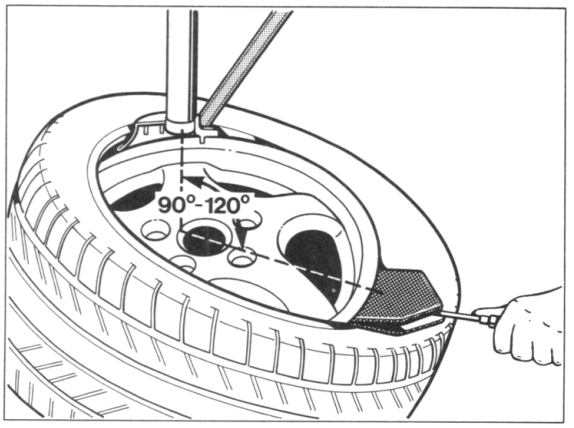

1015 - 44

– When combining 255/40 17-inch tires with 8-inch wheels, the additional tire level must be placed below the hump.

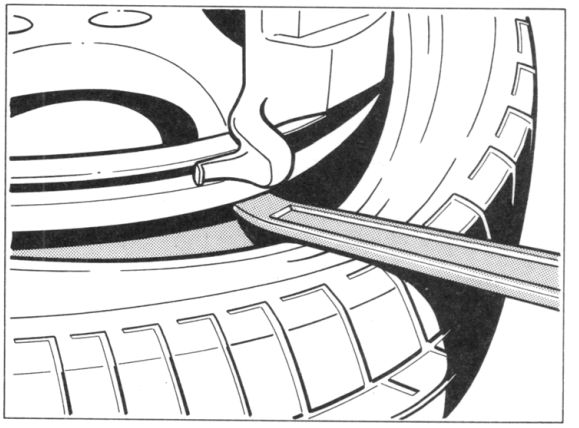

1016 - 44

– **When inflating the tire, the beads must jump over the hump at a positive pressure of 4.5 bar at the latest.**
The bead still located in the drop center must therefore be positioned **opposite the valve (flatter hump section)** when the tire is pumped up. If required, rotate the tire accordingly and coat with assembly compound again.

Removing the tire

– Adjust assembly head as for tire fitting (Fig. 1014 - 44).

– **When pressing off the tire, start at the valve since the levering force required in this area is somewhat lower.**
Then press off the tire on both sides, coating the rim flange with assembly compound.

Printed in Germany – XV, 1992

– **Lift the first side of the tire** over the assembly head (Fig. 1017 - 44). Place a rag or a leather cloth between the wheel and the tire lever.
In addition, make sure the tire remains in the drop center opposite the disassembly head (Fig. 1018 - 44). Use Special Tool 9539 to facilitate this.

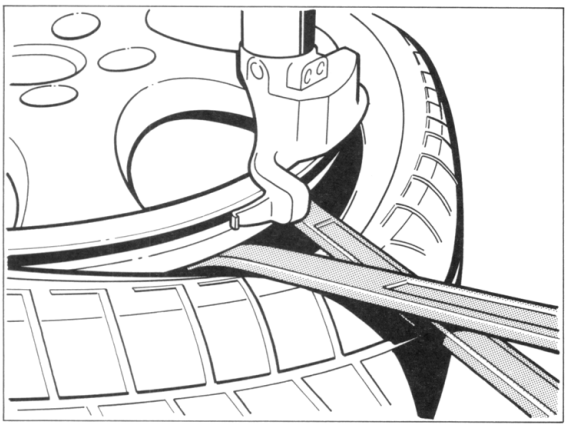

1017-44

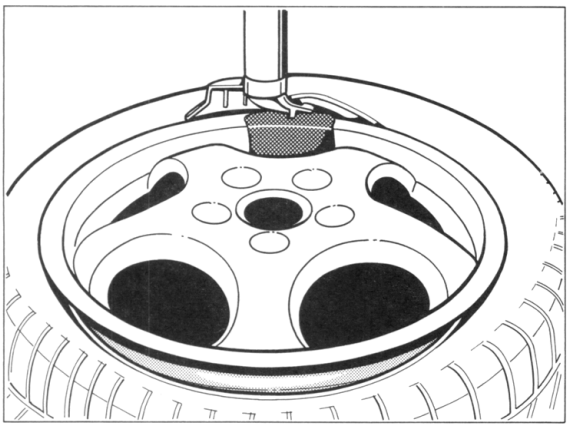

1018-44

– **Remove the second side of the tire** in the usual manner.

Printed in Germany – XV, 1992

Axial and Lateral Acceleration Sensors

Location

The sensors are installed on a sheet metal console on the tunnel underneath the center console. These sensors are required for all wheel drive and antiblock systems.

1 - Lateral acceleration sensor

2 - Axial acceleration sensor

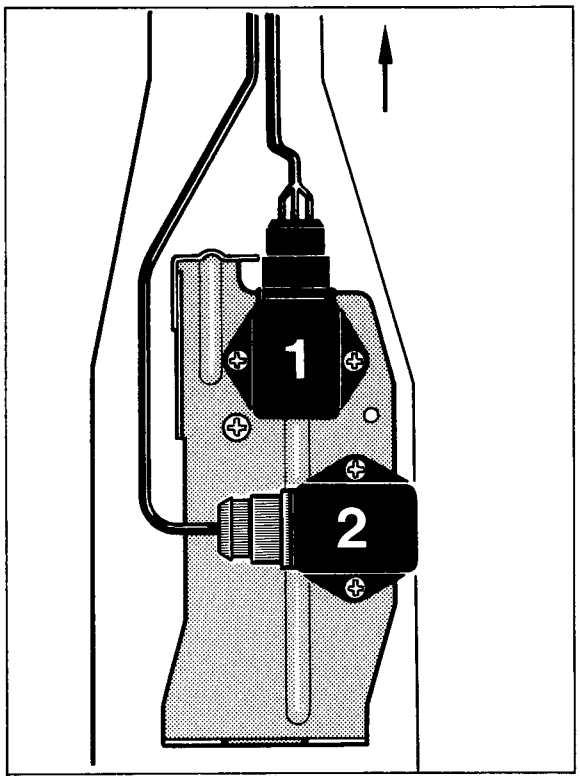

290- 45

Installation

Always conform with the following points when installing.

1. Park car on level ground (level floor).

2. Check levelness of the sheet metal console with a bubble level. Replace a bent sheet metal console.

3. Connecting leads must **not** be mixed up. Plug receptacles have different colors for identification.
   Black plug receptacle for the lateral acceleration sensor.
   Gray plug receptacle for the axial acceleration sensor.

4. Sensors must not be subjected to any type of extreme acceleration such as from throwing, falling or knocking.

5. Sensors must always be inspected after an accident. Sensors must be replaced if they are not within specifications.

Checking

Checking Information:

Checking is required to guarantee the following points.

- Correct location (position) of sensors

- Function of sensors

- Electric leads (plugs) connected on the correct sensor (mix-up test)

Printed in Germany – III, 1989

Testing requires use of a 55-pin ABS 2 - LED adapter lead (see point 1.), multimeter, garage jack and measuring tape. The 55-pin adapter lead, which is required for the ABS test of Carrera 4 models (instead of the 35-pin adapter lead), has 3 outlets which were integrated for testing of axial and lateral acceleration sensors.

Manufacturer of Adapter Lead:

Robert Bosch GmbH
Dept.: KH/VKD 3
P. O. Box 41 09 60
D-7500 Karlsruhe 41
Phone: 0721/4009-1
Telex: 78 26 663

Suppliers of Adapter Lead:

Authorized Dealers
Order No. KDAS 0003/7

1. Turn off the ignition, disconnect ABS/PDAS control unit plug on the control unit and connect it with the 55-pin ABS 2 - LED adapter lead.

Note

The following tests are possible with or without a connected ABS 2 - LED tester. The three outlets are marked with symbols.

A = Signal from axial acceleration sensor
B = Signal from lateral acceleration sensor
C = Ground for both sensors

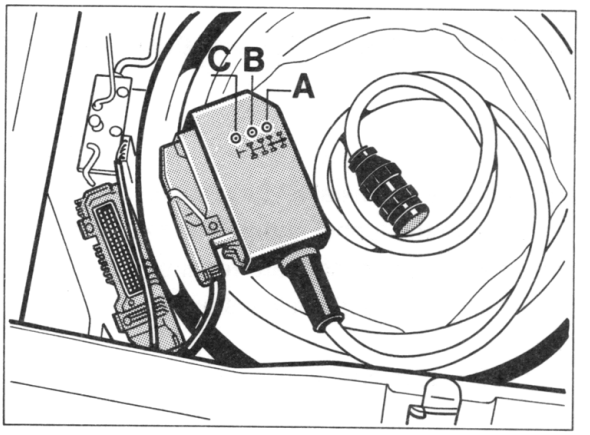

291 - 45

2. Measure and note the voltage values from the axial acceleration sensor and lateral acceleration sensor with the car in normal position and the ignition turned on.
Specification: 2.7 ± 0.14 volts.
Normal position means that the car is on a level surface. If the car had been lifted previously and if necessary, take stress out of the wheel suspension (move car several meters and bottom the front and rear wheel suspension several times).
Continue with the Evaluation Table at the end of this section if the value deviates from specifications.

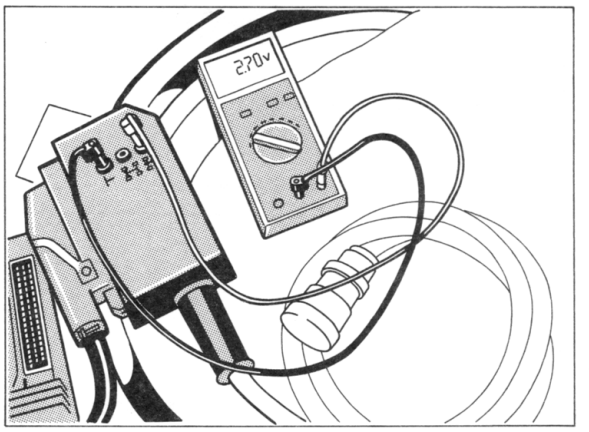

292 - 45

Printed in Germany – III, 1989

3. Provide about 150 mm ground clearance on the left front wheel by lifting the car on the left front car jack take-up point. Read and note voltage values of the sensors.

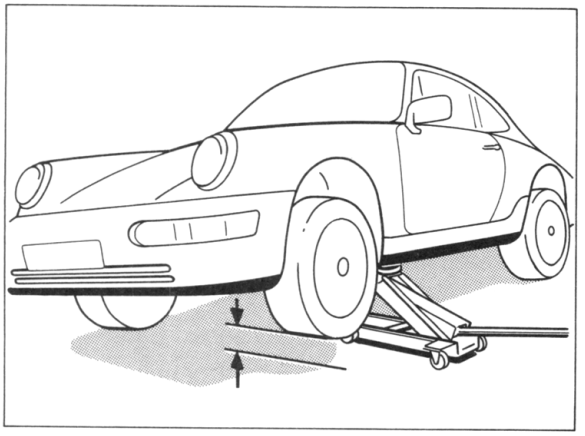

293 - 45

Note

A cover is located on the right-hand side of the center console and must be removed to have access to the sensors.

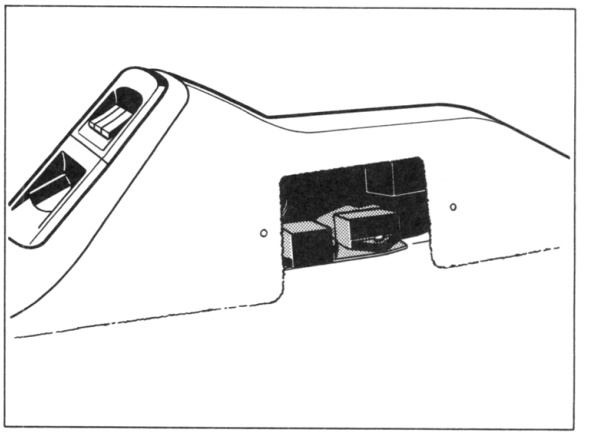

294 - 45

4. Lower left front side of car again.
Lift car at right front afterwards in the same manner and also about 150 mm.
Read and note voltage values of the sensors.

5. **Evaluate the values with help of the following table. If applicable, eliminate any faults.**

Printed in Germany – III, 1989

Evaluation Table for Sensor Test

Tested / Information	Requirements Fault / Fault Elimination
Installed position of sensors by way of the output voltage Sensors receive an input voltage of 5 V from the ABS / PDAS control unit. Output voltage is 2.7 V insofar as the sensor is in horizontal position and in perfect condition.	- **Specifications:** **2.7 ± 0.14 volts for a stationary car on a level surface (ignition turned on).** Test value above or below specified value = bent sensor console or faulty sensor. No voltage displayed = break in electric leads or faulty sensor. If applicable, check electric leads according to the wiring diagram. Certain faults (breaks / shorts / faulty sensor) are stored in the fault memory of the ABS/PDAS control unit. Consequently always read out and, if applicable, cancel the fault memory with a 9288 System Tester after elimination of faults (see page 39/45-1).
Sensor function / mix-up test Test by lifting car approx. 150 mm each 1 x right front and 1 x left front. This ust produce a precisely defined change in voltage. Use the above mentioned test (output voltage for a car on level surface) as a reference value.	- **Axial acceleration sensor** Specifications: **The output voltage must change in the direction of less voltage** when lifting the car at right front and left front. Example: Output voltage 2.73 V Left front lifted 2.63 V Right front lifted 2.62 V - **Lateral acceleration sensor** Specifications: With the output voltage value as a basis **there must be greater voltage when lifting at left front and less voltage when lifting at right front.** Example: Output voltage 2.71 V Left front lifted 2.91 V Right front lifted 2.50 V

Printed in Germany – III, 1989

Tested / Information	Requirements Fault / Fault Elimination
Always check the symbols (identification for axial acceleration sensor and lateral acceleration sensor) on the adapter plug (mix-up test).	- **Electric lead plugs are mixed up on the sensors**, if the voltage changes in direction of more and in direction of less voltage (as should be on the lateral acceleration sensor) when testing the axial acceleration sensor (lifted 1 x left and 1 x right). See page 45 - 1 for cross reference. The pertinent sensor has a fault, if there is no change in voltage while lifting (left and right lifted the same distance). Eliminate the fault and then read out and, if applicable, cancel the fault memory with a 9288 System Tester.

Printed in Germany – III, 1989

Testing ABS in 911 Carrera 4 with ABS 2-LED Tester

Important information on ABS of 911 Carrera 4

1. If any work is carried out on the hydraulic unit, speed sensors or cable harness, or if any units are replaced, e.g. during accident repairs, **a function check with the ABS Tester must be performed.** This prevents any mixing up of the electrical and hydraulic lines and ensures that the hydraulic unit functions correctly.

2. If a fault is indicated during operation (without any prior assembly work), diagnosing and trouble-shooting with System Tester 9288 is possible.
   In this case select system PDAS and read the fault memory.

Tools

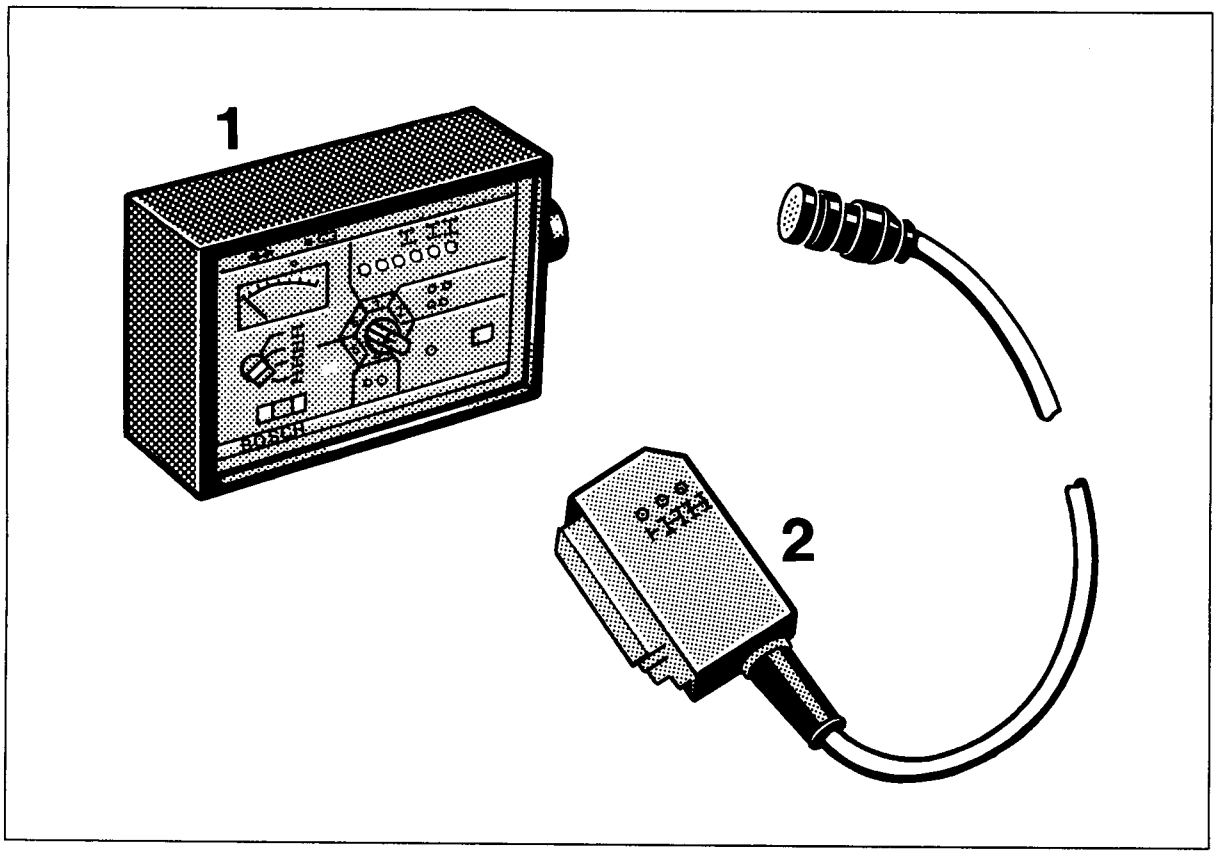

499-45

Tools

No.	Designation	Special tool	Order number	Explanation
1	ABS 2-LED Tester		KDAS 0003	**Manufacturer** Robert Bosch GmbH Abt.: KH/VKD 3 Postfach 41 09 60 7500 Karlsruhe 41 Telephone: 0721/4009-1 Telex: 78 26 663 **Supplier** Authorized dealer or agent
2	55-pole ABS 2-LED adapter cable		KDAS 0003/7	Same manufacturer and supplier as No. 1 Other possible applications of adapter cable: – on the 911 Carrera 4 for checking longitudinal and transverse acceleration sensors – on the 928 with PSD for checking ABS and transverse acceleration sensor

Printed in Germany – VII, 1990

PDAS diagnosis/Troubleshooting

Contents

Test point	Title	Page
	Contents	D39/45-1
	Overview of diagnosis/Troubleshooting on PDAS and ABS	D39/45-3
	Connector assignment of PDAS/ABS control unit	D39/45-7
	Important vehicle information	D39/45-8
1	PDAS diagnosis with system tester 9288	D39/45-9
	Important information for diagnosis/troubleshooting with system tester 9288	D39/45-11
	Fault memory: Possible fault display/troubleshooting	D39/45-12
2	Bleeding condition of lock control (post-bleeding the hydraulics of the lock actuation system)	47-5
3	Measuring disk wear at the longitudinal and transverse locks	D39/45-21
4	Checking locking moment (friction coefficient) of longitudinal and transverse locks	D39/45-25
5	Checking admision valves in locking hydraulics (lock activation)	D39/45-39
6	Pressure tests on the booster circuit (brake booster and lock control)	47-9
7	Longitudinal and transverse acceleration sensors (assembly/testing)	45-1
8	Preventing confusion of longitudinal and transverse lock lines	D39/45-43
9	Testing ABS in 911 Carrera 4 with ABS 2-LED tester	45 - 7

Printed in Germany - VII, 1990

Overview of diagnosis/troubleshooting on PDAS and ABS

General

PDAS (Porsche Dynamic All-wheel Control) operates in conjunction with the ABS (Anti Block System).
Several test operations with different testers and special tools are required for complete testing of PDAS and ABS.

It is possible to define the procedure in the event of faults or irregularities by making use of the following overview.

The page number or repair group for the following test points is specified in the table of contents on P. D39/45-1.

Overview

Test point	Notes
Test point 1	
PDAS diagnosis with system tester 9288	If a fault is indicated by the PDAS/ABS warning lamp (No. 8 / No. 9) and irregularities are suspected, first read out the fault memory of the PDAS/ABS control unit. If No. 13 (brake pressure warning lamp) and No. 8 light up although the engine has been running for longer than 1 minute, there is a fault in the booster circuit (test point 6 or troubleshooting in accordance with circuit diagram).

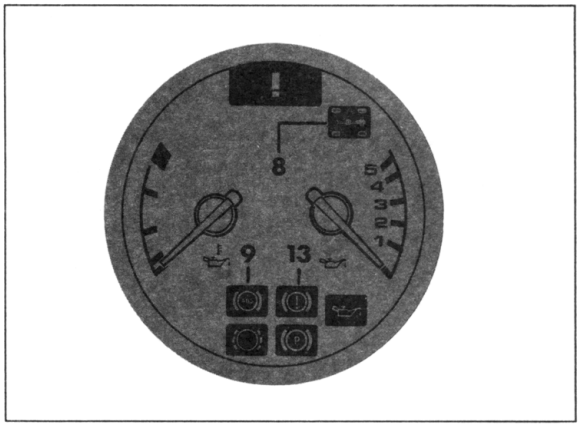

D 39/45-3

Printed in Germany - VI, 1990

Test point	Notes
Test point 2	
Bleeding condition of the lock control (post-bleeding the hydraulics of the lock actuation system)	The control quality of the lock depends greatly on the bleeding condition. A relevant test with workshop equipment is not possible. For this reason, post-bleed in cases of doubt (Page 47-5).
Test point 3	
Measuring the disk wear on the longitudinal and transverse locks	Measure the thickness of the disk assemblies in built-in condition using a lock measuring cylinder (special tool 9514).
Test point 4	
Checking the locking torque (friction coefficients) of the longitudinal and transverse locks	In the event of functional problems or irregularities, perform or verify test points 1, 2 and 3 before the locking torque test (locking torque in relation to pressure). This means: – No fault stored in the control unit fault memory t – Perfect bleeding condition of the lock control – Thickness of the disk assemblies ok (wear assessment) If the friction coefficient curves deviate from the setpoint in the locking torque test, the lock is not functioning optimally. Only a large deviation of the actual value from the setpoint is stored as a system deviation in the control unit fault memory. When performing the locking torque test, check the pre-pressure valves in the lock hydraulics (lock actuation system) as well (test point 5).

Test point	Notes
Test point 5	
Checking the pre-pressure valves in the lock hydraulics (lock actuation system)	A pre-pressure valve is installed in the pressure line before every lock cylinder. This holds a residual pressure for play compensation and to ensure dynamic driving response.
Test point 6	
Pressure test on the booster circuit (brake booster and lock control)	The following are tested: – Freedom from leaks of the booster circuit – Pressure accumulator (gas charging pressure) – Switching points for the booster circuit (brake pressure warning lamp No. 13 and operating pressure) Brake pressure warning lamp No. 13, refer to Page D39/45-3 under test point 1. Frequent operation of the pressure pump: It is normal for the pressure pump (pump assembly) to start running after every 2nd or 3rd braking operation.
Test point 7	
Longitudinal and transverse acceleration sensors	This test serves the purpose of verifying the following points: – Correct installation position of the sensors – Function of the sensors – Connecting cables (connectors) plugged onto the correct sensor in each case (confusion check) **The sensors can be damaged by extreme acceleration (throw-fall-shock stressing) or extreme deceleration (accident).** **A sensor test must be performed in such a case and after repair work (removal and installation) (P. 45-1)**

Test point	Notes
Test point 8	
Preventing confusion of of longitudinal and transverse lock lines (hydraulic and electric)	This test tensures that in each case the right lock is operated following activation from the control unit. Electrical lines from the control unit to the valve block (longitudinal and transverse lock solenoid valves), or hydraulic lines (pressure lines) from the valve block to the lock cylinders could be mixed up. This could for instance occur following an accident repair involving corresponding removal and reassembly work.
Test point 9	
ABS test	If a fault is indicated by the PDAS/ABS warning lamp, first read out the control unit fault memory with the system tester 9288. To remedy the fault, use the ABS 2-LED tester in conjunction with the 55-pole adapter cable if necessary. The adapter cable is also used for sensor testing. After repair work on ABS components (as known from 944 and 928), perform a test with the ABS 2-LED tester under all circumstances.

Printed in Germany - VII, 1990

Connector assignment of PDAS/ABS control unit connector

Note: Equip 2 control unit connector auxiliary leads (self-made) with 2 tab connectors N 17.457.2 so that the connector contacts in the device plug are not damaged during the test.

1 Voltage, terminal 15
2 Operation of ABS rear axle solenoid valve
3 Ground, ABS solenoid valve, front right
4 K-lead from diagnosis
5 Operation of pump motor relay on hydraulic assembly
6 Free
7 Operation of valve relay on hydraulic assembly
8 Free
9 Ground of acceleration sensors
10 Speed sensor output at rear right for rear spoiler auxiliary control unit
11 Voltage, terminal 30
12 Free
13 Signal from longitudinal acceleration sensor
14 Free
15 Voltage supply (+5V) for acceleration sensors
16 Free
17 Monitoring, voltage supply for ABS solenoid valves
18 Operation of longitudinal lock solenoid valve
19 Operation of ABS solenoid valve, front left
20 Voltage for valve and motor relays on hydraulic assembly
21 Operation of transverse lock solenoid valve
22 Operation of ABS solenoid valve, front right
23 Monitoring of voltage supply for lock solenoid valves
24 Operation of ABS warning lamp
25 Free

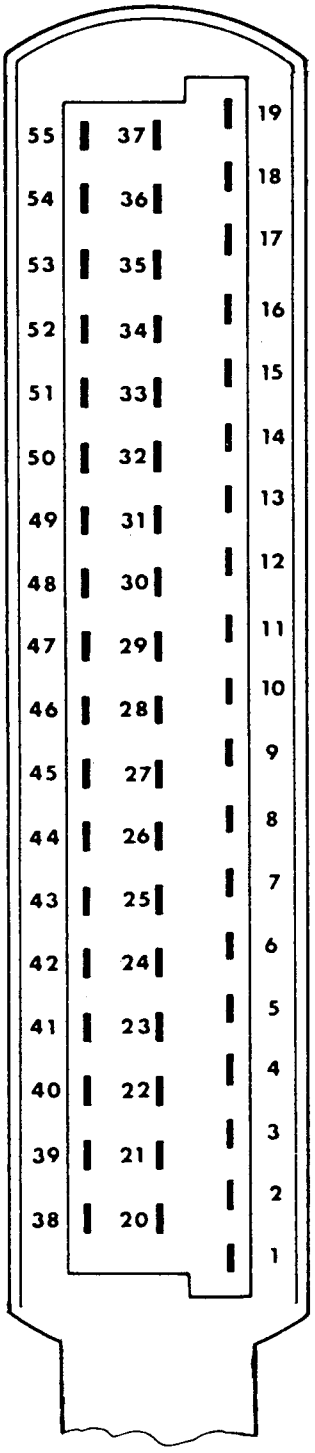

26 Free
27 D+
28 Full-lock switch
29 Brake light switch
30 L-lead from diagnosis
31 Pump motor monitoring (hydraulic assembly)
32 Free
33 Free
34 Signal from transverse acceleration sensor
35 Operation of lock warning lamp
36 Free
37 Ground, ABS solenoid valves, front left + rear axle
38 Free
39 Free
40 Pilot lamp for lock function at full-lock switch
41 Free
42 Ground, shield, speed sensor at rear right
43 Signal, speed sensor at rear right
44 Ground, shield, speed sensor at rear left
45 Signal, speed sensor at rear left
46 Ground, shield, speed sensor at front right
47 Signal, speed sensor at front right
48 Ground, shield, speed sensor at front left
49 Free
50 Free
51 Signal, speed sensor at front left
52 Electronics ground
53 Free
54 Free
55 Free

Printed in Germany - VI, 1990

Important vehicle information

- Always turn off the ignition or disconnect the battery for resistance measurements (if this is not done, the measuring device could be destroyed).
- Disconnect the control unit connector from the control unit only when the ignition is switched off.
- Do not disconnect the battery when the engine is running.
- Never use a starting aid with more than 16 V or a boost battery charger.
- Depressurize the system first when working on the lock hydraulics.
- If the battery has been disconnected, system adaption must be performed subsequently (DME menu-system adaption).

- Brake test:

It is possible to test braking efficiency on a single-roller test stand with switched-off ignition. The roller speed must, however, be below 13 km/h.
In order to obtain sufficient brake force boosting, the brake must be operated as often as required directly before the test with the ignition switched on until the hydraulic pump starts running and fills up the pressure accumulator. Approx. 3...5 braking operations are then possible on the test stand with **the ignition switched off**.

- Towing: **Permitted only on all 4 wheels**

Legal regulations which deal with towing must be observed.
Switch on the ignition for this purpose.
The traction program must be switched off. To check this, turn the full-lock switch (traction switch in the center console) to the left.
Use the screw-in towing lug supplied with the vehicle tools.

PDAS diagnosis with system tester 9288

General

The PDAS/ABS control unit is capable of self-diagnosis. In other words, the control unit can detect, store and output certain faults from the PDAS and ABS.

Diagnosis is performed with the system tester 9288. The tester 9268 cannot be used.

Continuous positive is present at the PDAS/ABS control unit so that faults which have been detected and stored are not cleared when the ignition is switched off.

Possible uses of the system tester 9288 for PDAS

- Reading out the fault memory, clearing the fault memory
- Bleeding the locks (Rep. Gr. 47)
- Testing the longitudinal and transverse locks (locking torque)
- Testing the full-lock switch (traction switch in the center console)

Connection of the 9288 and procedure

Note
PDAS diagnosis with the system tester 9288 must be performed with the ignition switched on and the vehicle stationary.

1. Tester 9288 in conjunction with connecting cable 9288/1 (adapter cable)

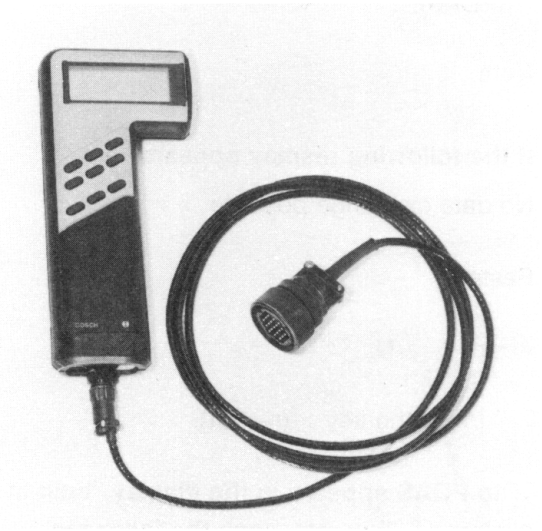

Connect at the diagnosis socket in the passenger footwell (under the cover).

88/428

Printed in Germany - VI, 1990

2. **Switch on ignition and tester. It is possible to switch on the tester by means of any key. The operating instructions of the tester 9288 are contained in Repair Group 03.**

3. Select vehicle type and then the system (PDAS).

Note

If the following display appears:

No data exchange possible

Restart: >

Abort: N

- Press the key > (restart).

If no PDAS appears in the display "built-in systems ", this may have the following cause:

- Engine running
- Voltage supply for the control unit interrupted
- Ground missing
- K-lead or L-lead from diagnosis unit not ok
- Control unit faulty

4. Menu selection

Possible PDAS menus/explanation

1 = Fault memory
Read out fault memory/
fault elimination
Clear fault memory

2 = Drive links
Bleed
Testing transverse lock
Testing longitudinal lock

3 = Input signals
Full-lock switch test
(Traction switch in center console)

5. Information on desired menu
Menu 1 = Fault memory:
As from page D39/45-12
Menu 2 = Drive links
Bleeding: in repair group 47
Testing transverse and longitudinal locks:
Test point 4, refer to P. D39/45-1 (next supplement)
Menu 3 = Input signals
Full-lock switch test:
Next supplement for troubleshooting under No. 19 (troubleshooting No. 1 as from page D39/45-13).

Important information on diagnosis/troubleshooting with the system tester 9288

A precondition for troubleshooting is that the test person

- knows the positions of the components as well as the functions and technical relationships of the systems to be tested (model information)
- can read and evaluate Porsche circuit diagrams
- knows the functions of circuits and relays
- knows how to operate and evaluate test devices such as oscilloscopes, voltmeters, ohmmeters and ammeters.

Important:

If the control unit connector or battery is disconnected, the fault memory will be cleared.

If the battery is disconnectd, system adaption of the DME is also cleared.

The fault text in the display does not necessarily point to a fault in this component, but may also indicate a fault in the corresponding control unit and the connecting leads (paths) between the components and control unit.

No troubleshooting in the form of connector disconnection etc. must be performed before reading out the fault memory, because this may be stored as a fault in the fault memory.

Information on fault display

If fault not present appears on the tester display, this may mean:

- Fault not present at the time of testing (loose contact)
  Remedy: Check the fault path. In other words, perform a visual inspection of the wiring harness and plug-in connection.
- Test conditions under which the faults occurred are not satisfied (e.g., test speed is not reached)
  Remedy: Satisfy the conditions

Signal not plausible:

The signal of the monitored component does not fit in the tolerance band of the calculated value in the control unit

Printed in Germany - VI, 1990

Fault memory: Possible fault display/troubleshooting

Possible fault display

A maximum of 3 faults can be stored in the fault memory.

1:Transverse lock Valve	8:ABS Speed sensor rear right	15:Longitudinal lock valve
2:Transverse accel. sensor short/open circuit	9:ABS Speed sensor rear left	16:Longitudinal accel. sensor short/open circuit
3:Transverse accel. sensor Signal not plausible	10:ABS valve front left	17:Longitudinal accel. sensor Signal not plausible
4:Regulating tolerance transverse lock	11:ABS valve front right	18:Regulating tolerance longitudinal lock
5:Control unit faulty	12:ABS valve rear axle	19:Full-lock switch
6:ABS Speed sensor front left	13:Valve relay	
7:ABS Speed sensor front right	14:Return pump	

Fault indication / Troubleshooting

Important notes

If warning displays and faults are shown in the PDAS/ABS or other fault memories, they may have been triggered off by the following interference:

- Interference to electronic components or the car's electrical system caused by the ignition current or sparks at gaps in the ignition circuit (incorrectly assembled or loose spark plug caps or damaged ignition leads).
  Please refer to Technical Information Group 2 No. 5/89.

- Contact resistance caused by poor earth/ground connections, leading to differences in potential or inadequate screening of speed sensors.
  The poor earth/ground connection may not only occur at the affected components but also at other important earthing/grounding points.

Troubleshooting aids

When measuring with the multimeter at the control-unit plug, make up 1 or 2 temporary leads in your own workshop, each with 2 flat pin plugs No. 17.457.2, to avoid damaging the plug contacts in the control-unit plug during the test.

Exchanging assemblies

Hydraulic unit: After installing/bleeding, carry out a complete ABS test with the ABS 2-LED tester.
Locking valve block: After installing/bleeding, carry out a check on the front-rear and lateral differential locks to ensure that the connections have not been accidentally interchanged.

Combined plug connections - distinguishing between wires

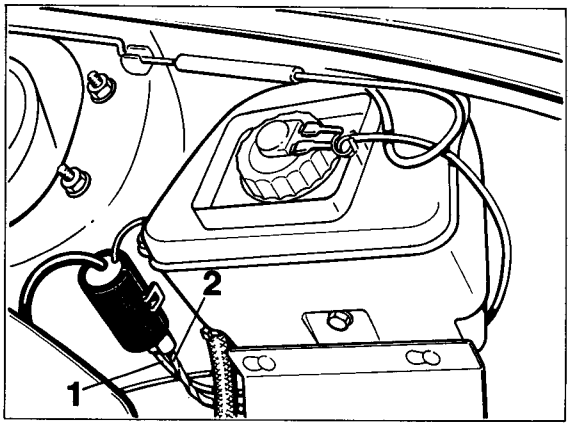

620-D39/45

In the brake pad wear and speed sensor wiring there are several combined plug connections of similar pattern. In this area, the wires can be distinguished as follows:

Screened wires (1) for the speed sensors.
2 wires with a protective tube (2) for brake pad wear.

Trial drive after eliminating fault

Erase the contents of the fault memory after the fault has been eliminated. Try the car out, then read out the fault memory again.

Printed in Germany – X, 1990

Fault, Fault Code	Possible Causes, Elimination, Remarks
1: Lateral lock valve Fault code - 11 -	No feedback signal from valve to control unit

1. Switch off the ignition. Pull the plug off the control unit.
   Check that circuits at plug are not interrupted.

   PIN 21 to PIN 23
   PIN 21 to PIN 17

   If necessary, interrupt the wiring path (plug on locking valve block) and localize the break by reference to the circuit diagram.

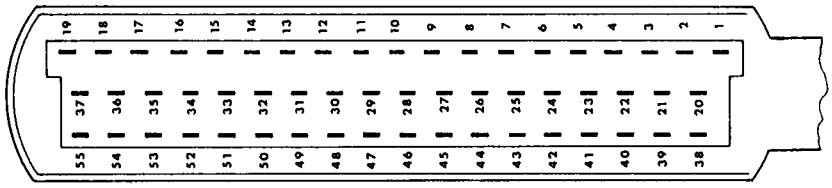

2. Pull off valve relay (No. 1) at hydraulic unit.
   Check for a short to positive or earth/ground in the wiring path as described in Item 1, by measuring at PIN 21.
   If there is a fault in the wiring path, separate it as described in Item 1 so that the unwanted connection to the positive or negative side can be localized.

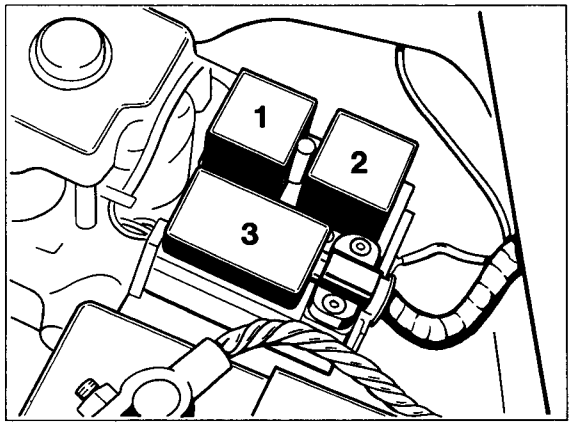

612-D39/45

3. Measure the internal resistance of the lateral locking valve.
   Desired value 2...4 Ω between PIN 1 and PIN 3 on valve block.
   If desired value is incorrect: renew the valve block.

Printed in Germany – X, 1990

Fault, Fault Code **Possible Causes, Elimination, Remarks**

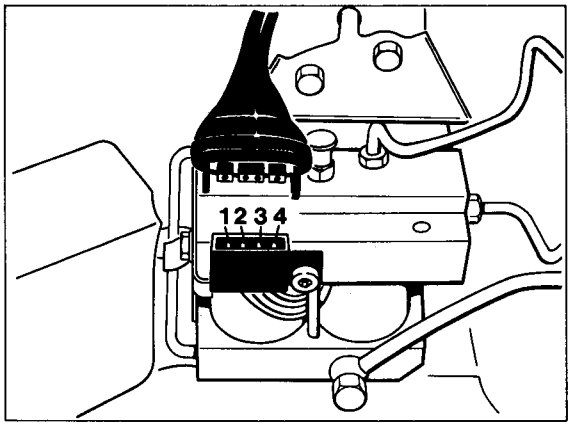

609B-D39/45

4. Check that the valve relay is energized (current present at solenoid valves).
   Attach all plugs and relays. Push back the protective cap at the valve block plug.
   Switch off the ignition, then switch it on again.
   The car's elec. system voltage must be present at PIN 1 and PIN 2.

   If **no** voltage is present: proceed with fault code - 34 - (valve relay). Note testing instructions (see below).

   If a voltage is present, try replacing the PDAS/ABS control unit (output stage defective).

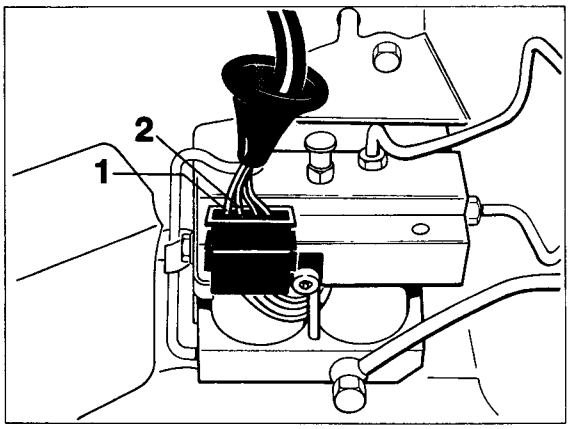

619 - D39/45

Notes on testing

If a plug for the power supply to the solenoid valves (ABS or differential lock) is detached while the ignition is switched on, the valve relay is de-energized. Even if the plug is then reconnected, the relay will not be re-energized until the ignition has been switched off and on again.

Printed in Germany – X, 1990

Fault, Fault Code	Possible Causes, Elimination, Remarks

2: Lateral acceleration sensor Short-circuit / Break in circuit
Fault code - 12 -

Wiring between control unit and lateral acceleration sensor not in working order (break, short to positive side or to earth/ground), or the lateral acceleration sensor itself is damaged.
The following wiring is installed:

– Power supply to sensor (5 Volt) =
PIN 15 at control unit - PIN 3 at sensor

– Earth/ground for sensor =
PIN 9 at control unit - PIN 1 at sensor

– Signal from sensor to control unit
(2,7 ± 0.14 Volt with car in normal-load position) =
PIN 34 at control unit - PIN 2 at sensor

The PIN data for the sensor plug can be seen on top of the plug after pushing back the protective sleeve.

1. Check power supply (approx. 5 Volt) at the sensor plug (black plug housing) after detaching it, with the ignition switched on.
PIN 1 (-) and PIN 3 (+).

Note

There is a cover on the right side of the center console. The sensors can be reached after removing this cover.
1 = Lateral acceleration sensor
2 = Front-rear acceleration sensor

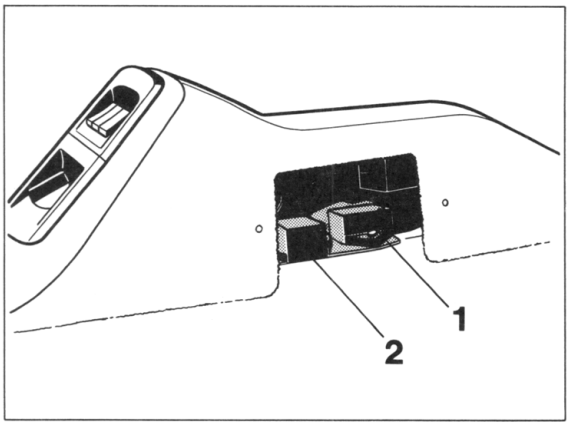

294 - 45

Fault, Fault Code	Possible Causes, Elimination, Remarks

2. Check for break in circuit or short to earth/ground at the wire between PIN 2 at the sensor plug and PIN 34 at the control unit plug after this has been detached.

3. Connect the plug to the sensor. Check the installed position of the sensor and its function by testing the output signal. To make this check, connect the 55-pin ABS 2-LED adapter wire to the control unit plug. Connect the multimeter to sockets B and C.
For meas. procedure and desired values, see Page 45 - 1...45 - 5.

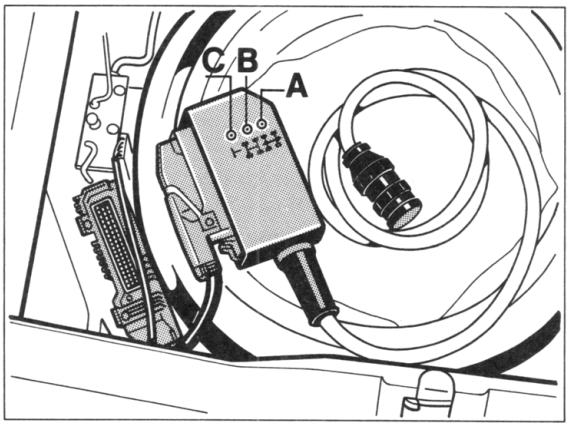

291 - 45

3: Lateral acceleration sensor Implausible signal
Fault code - 13 -

Signals from lateral acceleration sensor to control unit are incorrect. The sensor has a mechanical defect, its installed position is incorrect or the connecting wires have been accidentally interchanged.

1. Check lateral and front-rear acceleration sensor, Page 45 - 1...45 - 5.

2. Renew the sensor if necessary. No repair work on the sensor is permitted.

3. After eliminating the fault, repeat the test.

Printed in Germany – X, 1990

Fault, Fault Code	Possible Causes, Elimination, Remarks

4: Lateral lock Deviation in regulating values
Fault code - 14 -

During the lateral lock regulating phase the monitoring circuit in the PDAS/ABS control unit has identified excessive variations between the desired and actual values.

Possible faults

- Lock control circuit poorly bled (lock actuating hydraulics)
- Lock hydraulics leaking
- Locking valve block (solenoid valve) has a mechanical defect
- Lock cylinder does not retain preset pressure (leaking through load relief bore)
- Inadequate signal from a rear wheel speed sensor
- Fault in lateral lock plates
- Insufficient hydraulic pressure builds up at plates, for example because counter-bearing bolt at engagement lever is wrongly adjusted (only on adjustable version / engagement lever makes contact).

Procedure

1. Check lock hydraulics for external leaks. Renew defective parts if necessary.
2. Repeat bleeding procedure for lock control circuit (lock hydraulics). If new parts have been installed, the lock must be bled as appropriate. Refer to repair manual, Group 47.
3. Check speed sensor signals (Page D39/45 - 20... 20b).
4. Measure thickness of plates with lock measuring cylinder (special tool 9514). Page D39/45 - 21.
5. Check pressure at locking moment (friction value in lock) (Page D39/45 - 25).

Printed in Germany – X, 1990

Fault, Fault Code	Possible Causes, Elimination, Remarks

5: Control unit defective
Fault code - 15 -

Before renewing the control unit, check whether:

- there is any electrical interference from the ignition (for example if the spark plug caps are not correctly attached)
- there are any differences in potential caused by contact resistances (missing or poor earth/ground connections).
  Important:
  A poor earth/ground connection may occur not only at the affected components but also at other important earthing/grounding points, for example transmission earth/ground connections (from the starter motor to the body and from the intermediate transmission housing to the earth/ground point on the combined plug connection at the rear right).
- earth/ground contact is present at control unit plug PIN 3, 52 and 37. These wires are connected to earth./ground. point II (in right of trunk).

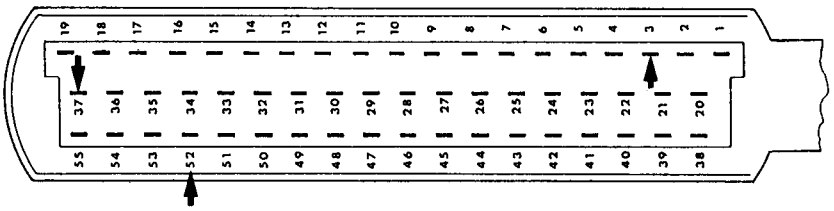

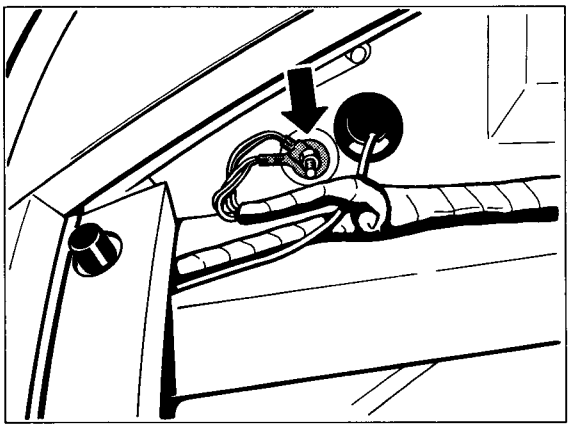

617 - D39/45

Warning

When renewing the PDAS/ABS control unit, make sure that the PSD/ABS control unit for the 928 is not accidentally installed.
For distinguishing features, see Page D39/45-20.

Printed in Germany – X, 1990

Fault, Fault Code	Possible Causes, Elimination, Remarks

6: Front left speed sensor
Fault code - 21 -

No signal from speed sensor reaches control unit, or signal is incorrect / unrealistic.

Warning: this fault is also indicated if the ABS/PSD control unit for the 928 is installed.
If assembly work has already taken place, check that the correct control unit has been installed.
Distinguishing feature: part number.

928 control unit with PSD = 928 618 ... ..
911 Carrera 4 control unit = 964 618 ... ..

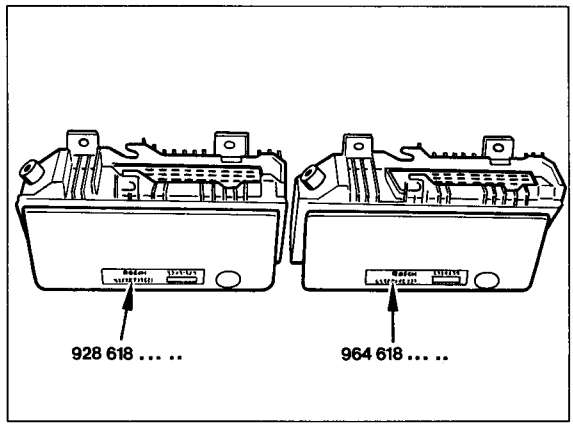

610 - D39/45

1. Pull of the control unit plug. Measure the internal resistance / check continuity between PIN 51 und PIN 48 on plug.
   Desired value 600...1600 Ω.
   If the desired value is not attained, check the wires and plug connections in the circuit from the front left speed sensor.
   Plug connections: 1 x on left spring strut, 1 x on left spring strut mount in trunk (for distinguishing feature, see Page D39/45 - 13).

   If the desired value (600...1600 Ω) is not reached although the wires / plug connections are in working order, renew the speed sensor.

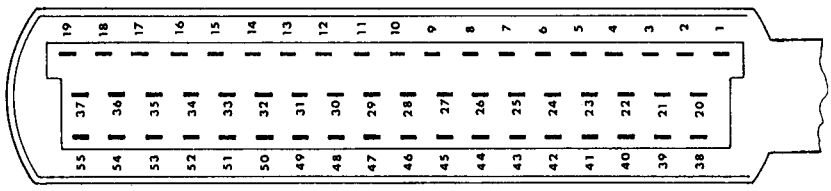

Printed in Germany – X, 1990

Fault, Fault Code **Possible Causes, Elimination, Remarks**

2. Checking the speed sensor signal.
For this check, use ABS 2 - LED tester (Page 45-7), or an oscilloscope.
Connect the ABS 2 - LED tester to the control unit plug with the 55-pin adapter line.

If an oscilloscope is used, separate the speed sensor plug connection at the spring strut or spring strut mount in the trunk (for distinguishing feature, see Page D39/45 - 13).
Connect the oscilloscope to the plug at the speed sensor side.
Depending on the tester, select special input or secondary image.

Check by turning the left front wheel by hand. ABS tester in program switch position 6 / rotary switch for wheel selection to front left wheel. Turn the wheel until the LED (No. 2) lights up without flashing.
If an oscilloscope is used, approx. 1 revolution per second.

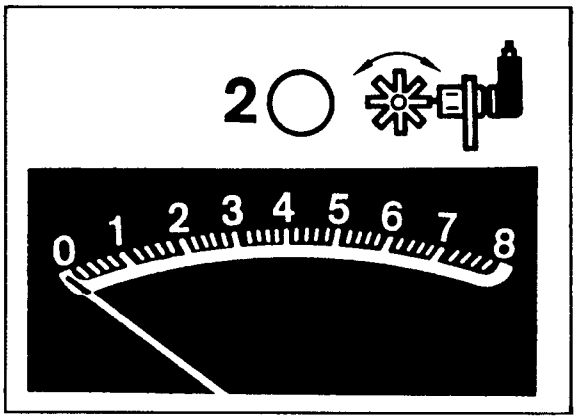

D39/45-20a

Desired values / desired value display
ABS 2 - LED tester = > 2.0
Oscilloscope = sine wave > 2 Volt
(measured value: peak to peak)

Possible causes of deviations

Air gap at speed sensor is too large / too small
(check installation).
Pulse wheel is damaged or corroded.
Damage to wheel bearing (wheel bearings are not adjustable).

Fault, Fault Code	Possible Causes, Elimination, Remarks
7: Front right speed sensor Fault code - 22 -	General procedure as for fault code - 21 - 1. Internal resistance / continuity between PIN 47 and PIN 46 at control unit plug. Plug connections*: on right spring strut and on spring strut mount at right of trunk. 2. Speed sensor signal: if the ABS tester is used, turn the wheel selector switch to the front right wheel.
8: Rear right speed sensor Fault code - 23 -	General procedure as for fault code - 21 - 1. Internal resistance / continuity between PIN 42 and PIN 43 at control unit plug. Plug connections*: 1 x on right rear axle trailing arm and 1 x above the right rear axle stabilizer bearing. 2. Speed sensor signal: if the ABS tester is used, turn the wheel selector switch to the rear right wheel.
9: Rear left speed sensor Fault code - 24 -	General procedure as for fault code - 21 - 1. Internal resistance / continuity between PIN 44 and PIN 45 at control unit plug. Plug connections*: 1 x on left rear axle trailing arm and 1 x at rear left, close to clutch and brake hose on transmission. 2. Speed sensor signal: if the ABS tester is used, turn the wheel selector switch to the rear left wheel.

* For distinguishing feature between speed sensor wire and brake pad wear sensor wire, see Page D39/45 - 13.

Fault, Fault Code	Possible Causes, Elimination, Remarks

10: Front left ABS valve
Fault code - 31 -

Certain faults in the ABS valve area (short to positive side or to earth/ground) in a control wire) can also be shown as a **valve relay fault** by the 9288 system tester.
A fault in the ABS valve circuits is normally memorized as an **ABS valve fault** in the control unit fault memory.
When the fault memory is read out, it is possible in the above situation for **2 faults to be displayed (ABS valve and valve relay).**

1. Switch off the ignition and pull the plug off the control unit. Check PIN 19 of plug against PIN 17 and against PIN 23 for continuity.
   If necessary, interrupt the circuit (plug at hydraulic unit) and localize the break by reference to the circuit diagram.

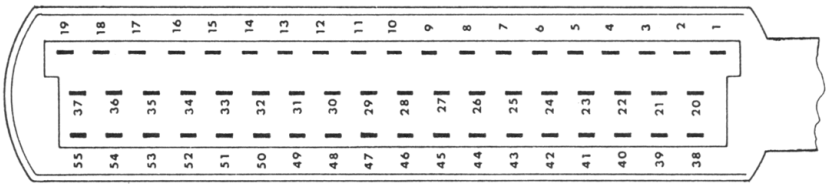

2. Pull off the valve relay (7 pole) at the hydraulic unit.
   Check for a short to the positive side or to earth/ground in the circuit as described in Item 1, by measuring at PIN 19.
   If a fault is detected, interrupt the circuit as described in Item 1, in order to localize the incorrect short-circuit to the positive side or to earth/ground.

3. Check resistance between PIN 19 of the plug and terminal 30 at the valve relay base.
   Desired value approx. 1...2 Ω.

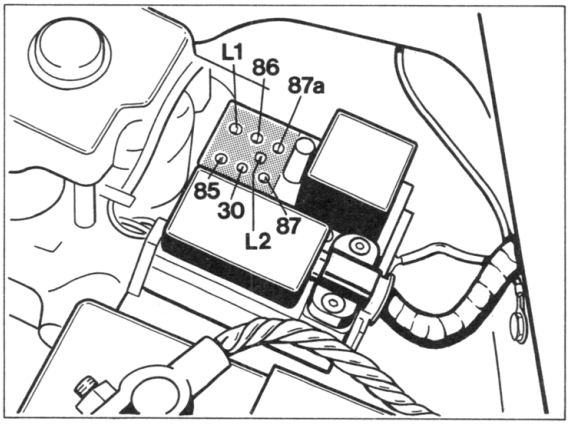

611A-D39/45

Printed in Germany – X, 1990

Fault, Fault Code	Possible Causes, Elimination, Remarks

If desired value is obtained: proceed with item 4.

If desired value is not obtained:
Pull off the 12-pole plug at the hydraulic unit (a Torx wrench is needed to relieve tension).
Check internal resistance of ABS solenoid valve. Measure between PIN 1 and PIN 4 (at the hydraulic unit).
Desired value 0.7...1.7 Ω.
If desired value is incorrect: renew the hydraulic unit.

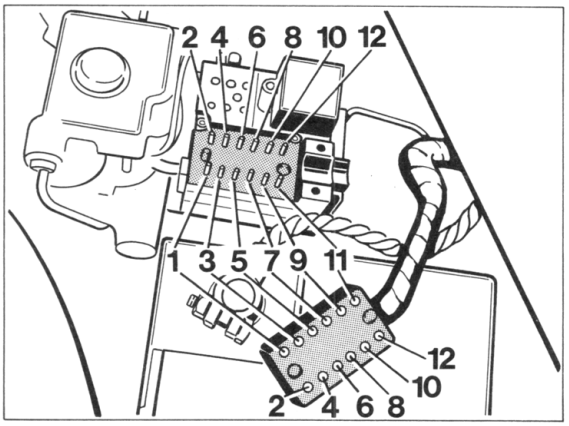

613-D39/45

4. Check whether the valve relay is energized (electric current present at solenoid valves).
To make this check, connect all plugs and the relay. Push back the protective cap on the locking valve block plug.
Switch the ignition off, then on again.
The voltage from the car's electrical system must be present at PIN 1 and PIN 2.
If no power supply is present: continue with fault code - 34 - (valve relay). Comply with testing notes.
If the power supply is present, renew the PDAS/ABS control unit experimentally (output stage defective).

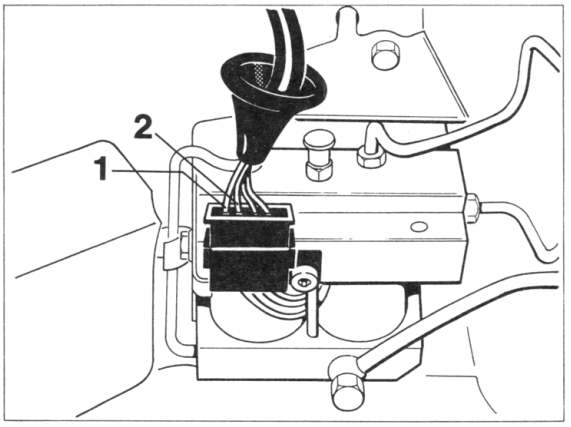

Fault, Fault Code	Possible Causes, Elimination, Remarks
	Testing notes If a power supply plug to the solenoid valves (ABS or differential lock) is pulled off while the ignition is switched on, the valve relay will be de-energized. It is not re-energized when the plug is reconnected until the ignition has been switched off and on again.
11: Front right ABS valve Fault code - 32 -	Comply with note under 10: Front left ABS valve, and with fault code - 31 -. When troubleshooting, proceed as for fault code - 31 -, but use PIN 22 instead of PIN 19 on the control unit plug. To check the internal resistance of the ABS valve (after pulling off the 12-pin plug at the hydraulic unit), measure between PIN 3 and PIN 4 (instead of PIN 1 and PIN 4).
12: Rear axle ABS valve Fault code - 33 -	Comply with note under 10: Front left ABS valve, and with fault code - 31 -. For troubleshooting, proceed as for fault code - 31 - but use PIN 2 instead of PIN 19 on the control unit plug. To check the internal resistance of the ABS valve (after pulling off the 12-pin plug at the hydraulic unit), measure between PIN 5 and PIN 4 (instead of PIN 1 and PIN 4).

Printed in Germany – X, 1990

Fault, Fault Code	Possible Causes, Elimination, Remarks

13: Valve relay
Fault code - 34 -

Certain faults in the ABS valve area (short-circuit to positive side or earth/ground in a control wire) may also be shown as **valve relay faults** by the 9288 system tester.
A fault in the ABS valve circuit is normally memorized as an **ABS valve fault** in the control unit's fault memory.
In the case described above, when the fault memory is read out the display of **2 faults is possible (ABS valve and valve relay).**

1. Switch off the ignition. Pull off the control unit plug.
   Check the control circuit (wire with relay) - from PIN 20 to PIN 7 - for breaks, short to earth/ground or short to positive side.

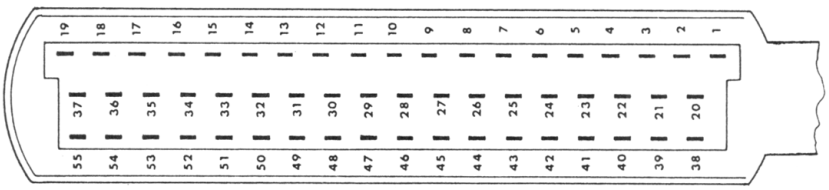

If no fault is found, proceed with 2.

If there is a break or a short to the positive side or to earth/ground, pull off the valve relay. Check the wires between terminal 85 on the relay base and PIN 7 on the control unit plug and between terminal 86 and PIN 20.

If the wires are in working order, renew the valve relay.

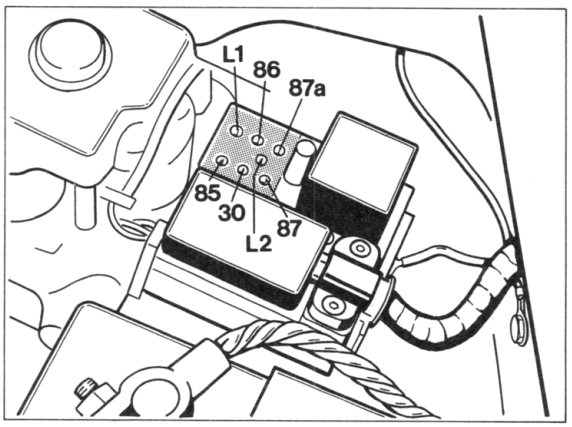

611A - D39/45

Printed in Germany – X, 1990

Fault, Fault Code	Possible Causes, Elimination, Remarks

2. Measure resistance between the following PINs at the control unit plug:

PIN 19 to PIN 17
PIN 22 to PIN 17
PIN 2 to PIN 17
Desired value approx. 1...2 Ω

PIN 21 to PIN 23
PIN 18 to PIN 23
Desired value approx. 2...4 Ω

If the desired value is correct, proceed to Item 3.

If incorrect values are obtained, localize the fault as appropriate.
From PIN 19, 22, 2 to PIN 17 = ABS valves + wiring
From PIN 21 and 18 to PIN 23 = Differential locking valves + wiring

Re ABS valves and wiring

Pull off the 12-pole plug at the hydraulic unit.
Measure the internal resistance of the solenoid valves.
PIN 1 against PIN 4
PIN 3 against PIN 4
PIN 5 against PIN 4
Desired value approx. 0.7...1.7 Ω

Desired value not obtained: renew hydraulic unit.

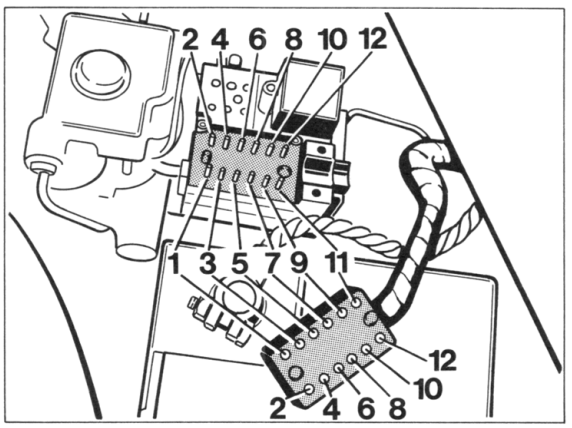

613-D39/45

Fault, Fault Code	Possible Causes, Elimination, Remarks

Re: differential locking valves and wiring:

Pull plug off valve block. Measure internal resistance of solenoid valves.
PIN 1 against PIN 3 and PIN 2 against PIN 4
Desired value 2...4 Ω
If an incorrect value is obtained: renew the valve block.

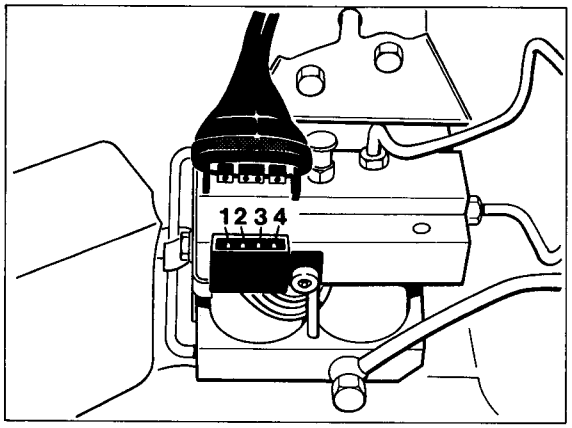

609B-D39/45

3. Pull off valve relay (7-pole) at hydraulic unit. Measure at control unit plug PIN 17 in order to determine whether there is a short to the positive side or to earth/ground.
   If necessary, interrupt the circuit at the hydraulic unit plug (12-pole) and localize the fault by reference to the circuit diagram.

4. Check that the power supply is present at terminal 87 of the relay base (car's electrical system voltage) when the valve relay is pulled off. Desired reading: approx. 12 Volt (car's on-board system voltage).

5. Measure resistance between terminal 87 a on the relay base and the earth/ground wire at the pump motor.
   Desired value ≈ 2...4 Ω. It is essential for the earth/ground wire and the earth/ground point to be in working order.
   If necessary, renew the hydraulic unit (resistor in relay base has increased in value).

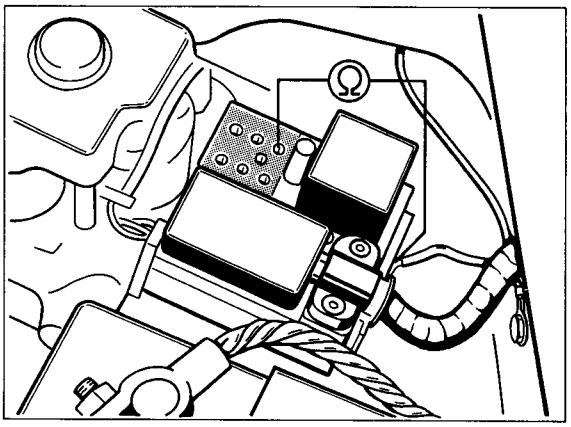

611B-D39/45

Fault, Fault Code **Possible Causes, Elimination, Remarks**

6. Check the wires from terminal L1 on the relay base to PIN 24 on the control unit plug and from L2 to PIN 35 for a break in circuit.

7. Check that the valve relay is energized (voltage present at solenoid valve).
   Reconnect all plugs and the relay.
   Push back the protective cap on the locking valve plug block.
   Switch the ignition off, then switch it on again.
   The voltage of the car's electrical system must be present at PIN 1 and PIN 2.

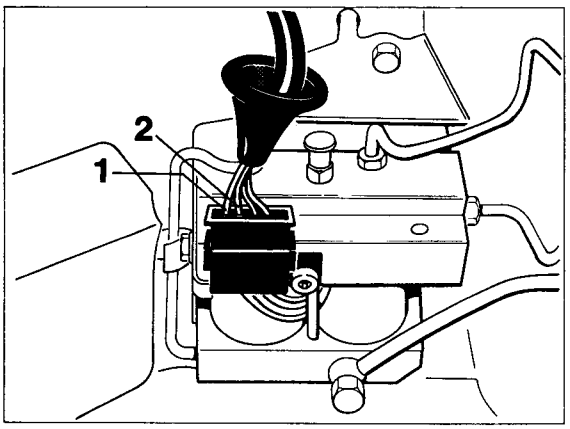

619-D39/45

If no voltage is present, renew the valve relay experimentally, or test with the ABS 2-LED tester to make quite sure that the relay is genuinely defective.

If the LED on the ABS tester fails to light up steadily in program switch position 5 with the ignition switched on, the relay is defective.

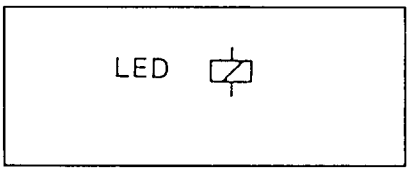

8. If the valve relay is in working order, renew the PDAS/ABS control unit experimentally (output stage defective).

Printed in Germany – X, 1990

Fault, Fault Code	Possible Causes, Elimination, Remarks

14: Return pump
Fault code - 35 -

1. Switch off the ignition. Pull off the plug at the control unit. Check control circuit (wire with relay) - PIN 20 to PIN 5 - for break or short-circuit to positive side or to earth/ground.

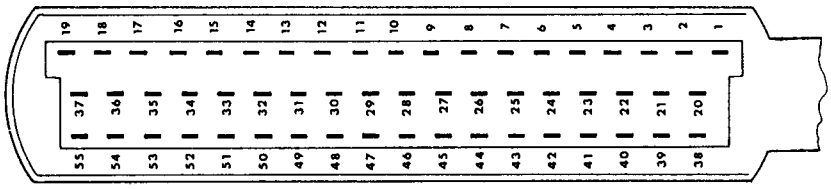

If no fault is found, proceed with 2.

If a break or short to the positive side or to earth/ground is present, pull off the motor relay. Check the wiring between terminal 85 at the relay base and PIN 5 at the control unit plug, and and between terminal 86 and PIN 20.

If the wiring is in working order: renew the motor relay.

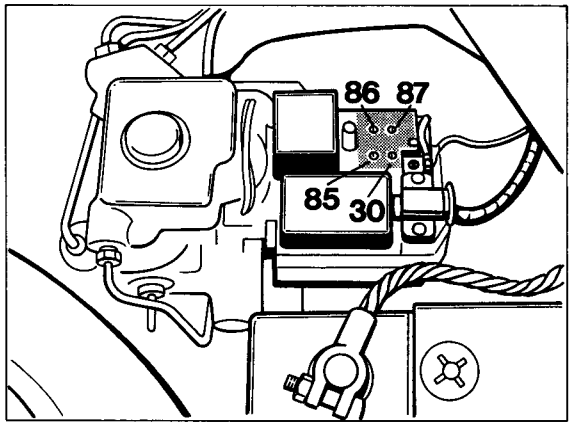

614A-D39/45

2. Pull off the motor relay. The car's electrical system voltage (app. 12 Volt) must be present at terminal 87 of the relay base.

3. Bridge terminals 30 and 87 at the relay base.
If the return pump does not run, continue at 4.

If the return pump runs:

Check the wire from terminal 30 on the relay to PIN 31 at the control unit plug. If the wire is in working order: renew the motor relay.

Printed in Germany – X, 1990

Fault, Fault Code	Possible Causes, Elimination, Remarks

4. Check connections at earth/ground wire (1) and positive wire (2) for contact resistance.
Bridge terminals 30 and 87 at the relay base and check that the electric current is reaching connecting point (3).
If the current is present at this point (but the return pump is not running): renew hydraulic unit (defective return pump).

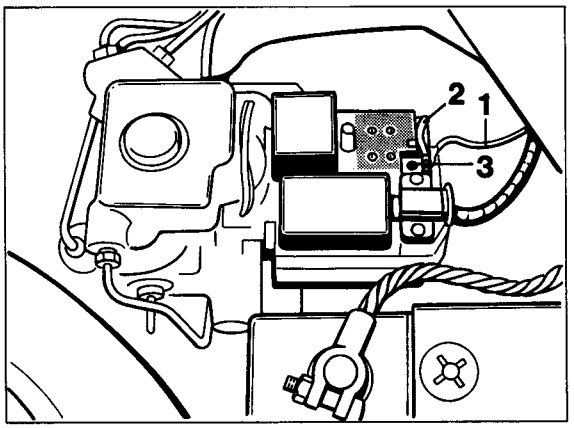

614B-D39/45

15: Front-rear differential lock valve
Fault code - 41 -

Proceed in general as for fault code - 11 -

1. Check control unit plug for continuity.

   PIN 18 against PIN 23
   PIN 18 against PIN 17

2. Pull of the valve relay at the hydraulic unit.
   Check whether there is a short to the positive side or to earth/ground in the circuit as descr. in Item 1. For this check, measure at PIN 18.

3. Measure internal resistance of front-rear locking valve.
   Desired value is 2...4 Ω between PIN 2 and PIN 4 at the valve block.
   If desired value is not obtained: renew the valve block.

4. As Item 4, fault code - 11 -.

Printed in Germany – X, 1990

Fault, Fault Code	Possible Causes, Elimination, Remarks
16: Front-rear acceleration sensor Short circuit / line break Fault code - 42 -	General procedure as for fault code - 12 - Note different PINs in use at control unit and different plug housing color at longitudinal acceleration sensor. **Output signal fron longitudinal acceleration sensor:** PIN 2 at sensor plug (grey plug housing) and PIN 13 on control unit / control unit plug. **Power supply and earth/ground:** Pins occupied at control unit and sensor plug are the same as for the lateral acceleration sensor.
17: Longitudinal acceleration sensor Implausible signal Fault code - 43 -	Signals from longitudinal acceleration sensor to control unit are incorrect. Sensor has a mechanical fault, installed position is incorrect or connecting wires have been accidentally interchanged. 1. Check lateral and longitudinal acceleration sensor, Page 45 - 1...45 - 5. 2. Renew sensor if necessary. Repairs to the sensor are not permitted. 3. After eliminating the fault, repeat the check.
18: Front-rear differential lock control deviations Fault code - 44 -	During the front-rear control process the monitoring circuit in the PDAS/ABS control unit has detected excessive discrepancies between the desired and actual values. If a speed sensor fault has also been memorized, the fault is probably restricted to the speed sensor signal. **Possible faults** Proceed in general as for fault code - 14 - with the foll. difference: - front or rear wheel speed sensor is not supplying an adequate signal - front-rear differential lock plates not in working order. **Procedure** - in general as for fault code - 14 -

Printed in Germany – X, 1990

Fault, Fault Code	Possible Causes, Elimination, Remarks
19: Full differential locking button Fault code - 45 -	The fault is also recorded if the full locking button (the traction switch on the center console) is held in the "Engage locks" for longer than 10 seconds.

1. Check whether an operating error or a genuine fault has occurred.
   For this check, enter Menu 3 = Switch inputs with the System Tester.

   Desired System Tester display with:

Switch in central position	: OPEN
Switch turned to right and held	: ON
Switch turned to left and held	: OFF

2. If a genuine fault has occurred, pull the plug off the full locking switch.
   Checking the full locking switch:
   Correct continuity between PIN 1 and PIN 3 when switch is turned to right and held.
   Correct continuity between PIN 1 and PIN 5 when switch is turned to left and held.

3. **Checking wiring / earth/ground and positive potential:**
   The current must be positive at PIN 3 of the switch plug when the ignition is switched on (≈ battery voltage / control unit plug attached).
   Earth/ground must be present at PIN 5 of the switch plug.
   Check that there is no break in the wire between control unit plug PIN 28 and PIN 1 of the switch plug.
   Make sure that this wire has no short to earth/ground or to the positive side.

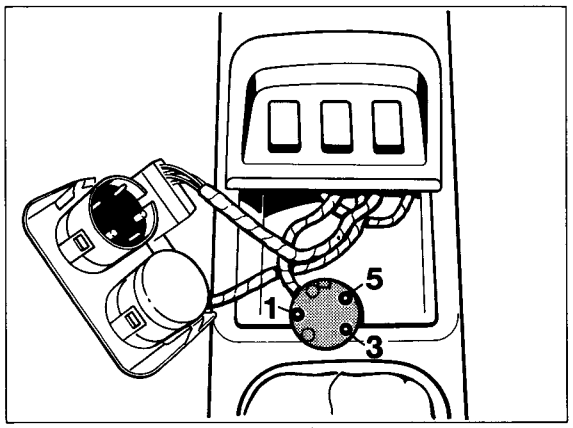

615-D39/45

Printed in Germany – X, 1990

Measuring the disk wear on the longitudinal and transverse locks

Note

The wear dimension can be determined only with the lock measuring cylinder - special tool 9514.

Explanation of special tool 9514

The scope of delivery of special tool 9514 comprises the parts A-B-C. The assembly consisting of A-B-C is used for transverse lock measurement. Only Part A is needed for longitudinal lock measurement.

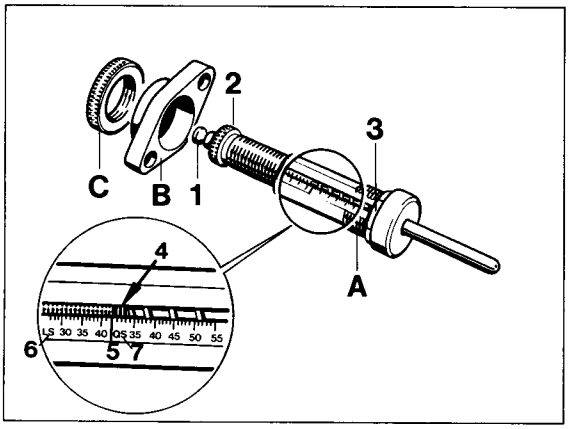

429-D39/45

A Measuring cylinder
B Flange for transverse lock testing
C Flange securing nut
1 Spacer tappet
2 Adjusting screw
3 Two surfaces for fixing the measuring cylinder for longitudinal lock measurement
4 Measuring groove on adjusting screw
5 Separating line for LS and QS measuring ranges
6 LS = Longitudinal lock measuring range
7 QS = Transverse lock measuring range (also for PSD of 928)

Preliminary work

1. To prevent the measured result from being corrupted, close the locks 2 x at full booster pressure before measurement.

   To do this:
   - Switch on the ignition
   - Press the brake pedal as often as required until the pump assembly starts running.
   - When the pump assembly has switched off independently, turn the full-lock switch (traction switch in the center console) to the right (close lock). Then turn the switch to the left (open lock).
   - Repeat this operation, i.e. close and open the locks once more.
   - Switch off the ignition.

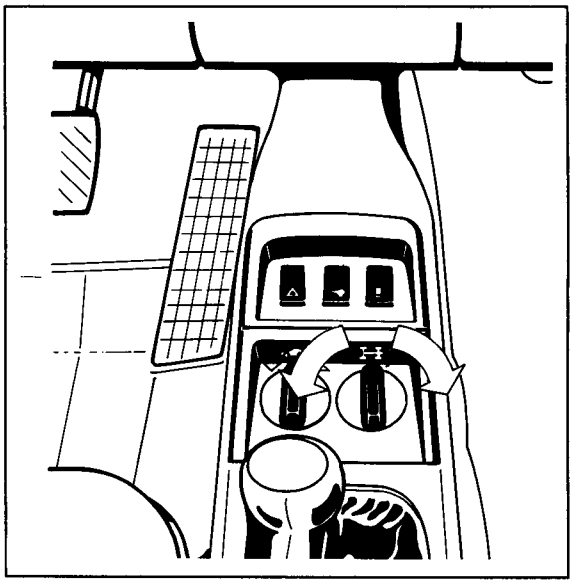

D39/45-21

2. Depressurize the booster circuit for safety reasons. To do this, remove the ignition key and then operate the brake pedal approx. 25 times.

3. Remove the slave cylinders.
- Transverse lock: Undo the fixing screws on the slave cylinder. Do not undo the pressure line.
- Longitudinal lock: Unscrew the screw on the slave cylinder and pull out holding plate (arrow). Do not undo the pressure line.
- Unclip the pressure line at the transmission and hang both lock cylinders to the side with connected line.

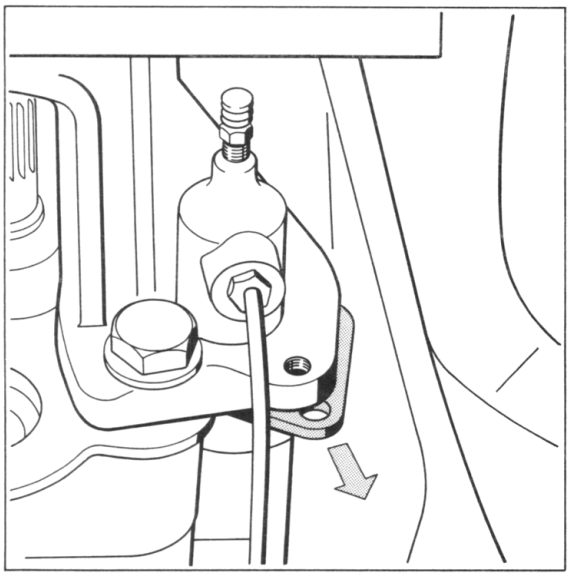

148-10

Measurement

Note

Perform measurement only after completion of all preliminary work. The sealing bellows (A) in the transmission case remains installed for measurement on the longitudinal and transverse locks.

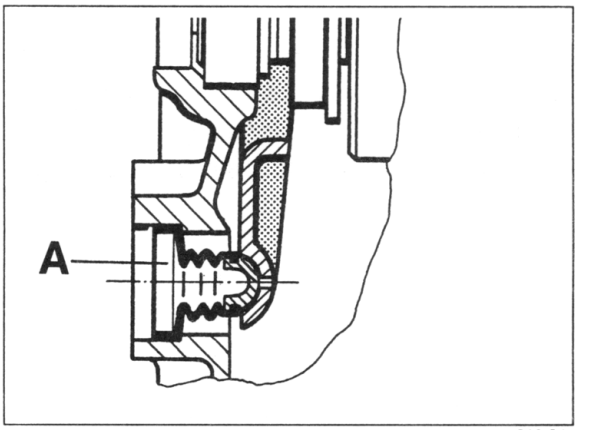

210-34

1. Back off the adjusting screw of the measuring cylinder (2) as far as possible so that assembly of the measuring cylinder is made easier.

2a. Measure transverse lock.
Fit the measuring cylinder (A) with flange (B) on the transmission. Align the measuring cylinder so that the measurement scale is easily visible. Tighten the flange securing nut (C).

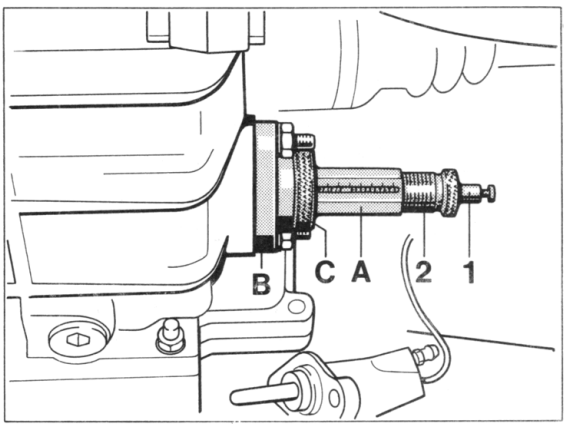

2b. Measure the longitudinal lock.
Secure the measuring cylinder with holding plate for the slave cylinder (arrow) on the transmission.

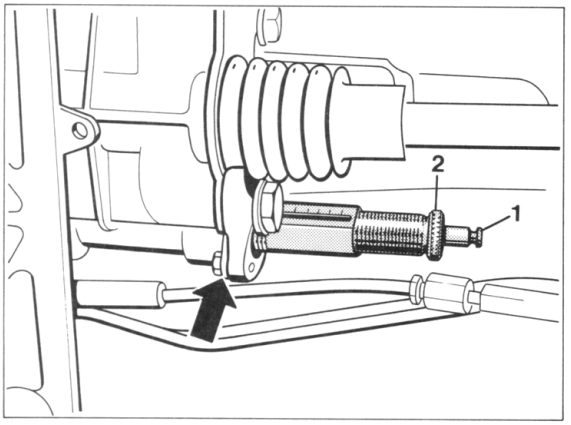

431-D39/45

3. Screw in the adjusting screw (2) on the measuring cylinder until there is no axial play at the spacer tappet (1) or so that there is just minimally perceptible axial play. Read off the axial dimension on the measuring cylinder in this position.
If the wear dimension has been reached, the disks of the lock must be replaced.

Note

If the first bearing screw of the engaging lever is adjustable, do not correct (manipulate) the wear dimension at the screw under any circumstances. In contrast, the adjustment dimension must be produced with the adjustable thrust bearing screw when new disks are installed.

Adjustment and wear dimension in mm

	Not adjustable	adjust.
Transverse lock:		
Adjustment dimension/ new dimension	approx. 33	31
Wear dimension		
Gylon discs*	36	36
Valeo discs**	40	40
Longitudinal lock:		
Adjustment dimension/ new dimension	approx. 29.5	29.5
Wear dimension	32.5	32.5

4. If the disks are ok, assemble the slave cylinders on the transmission again.

Note

If the sealing bellows (A-drawing 210-34) leaks, always replace the corresponding slave cylinders as well. In this case, bleed the lock cylinders and pressure line with system tester 9288 afterwards (P. 47-5).

5. Check general operation of the lock (brief test drive).

* **Initial version (Gylon discs)**. Before testing, check **if Valeo discs are fitted. Identification: "V"** embossed on transmission housing flange bottom that the look cylinder is fitted to (observe Technical Information).

** **Modified/present version (Valeo discs)**
Introduced for production as of **01-01-91, as of transmission No.** G 64 00 01146 / G 64 01 30 00529 / G 64 02 30 00501.

Printed in Germany - XVIII, 1992

Checking locking moment (friction coefficient) of longitudinal and transverse locks

Tools

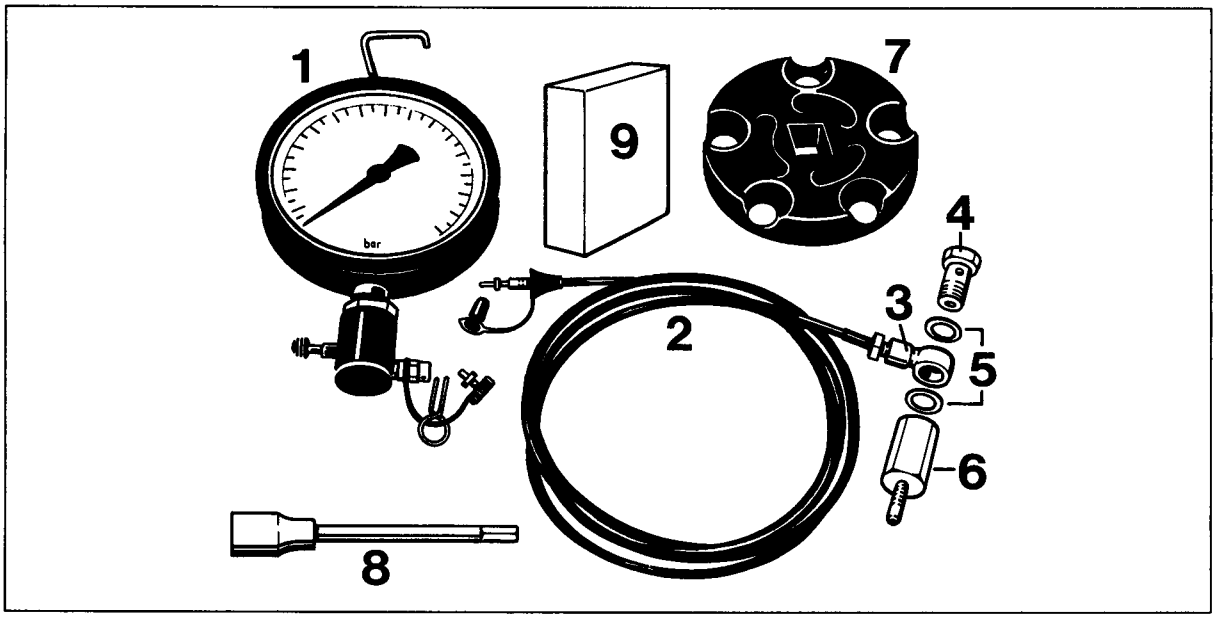

345-D39/45

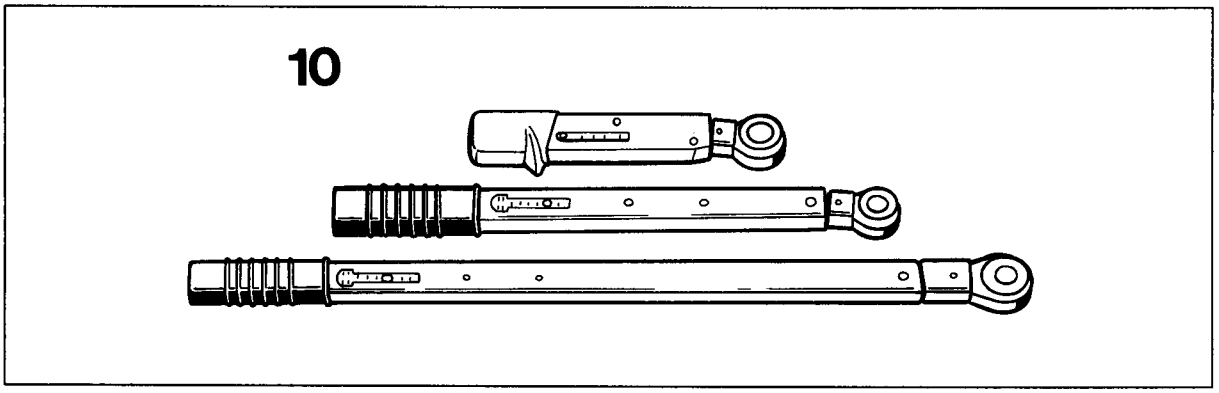

483-D39/45

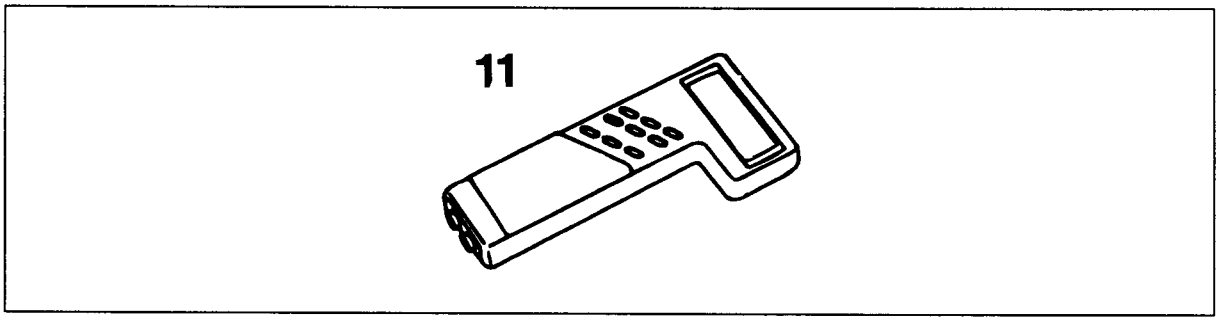

9288-D39/45

Tools

No.	Designation	Special tool	Order number	Explanation
1	Manometer	9509	000.721.950.90	Also used for checking pressure of booster circuit (P.47-9)
2	High-pressure measuring line	9509/1	000.721.950.91	
3	Inlet union	-	999.215.027.02	
4	Inlet-union screw	-	999.134.035.00	Shorten thread by approx. 4 mm
5	Seal ring	-	N 013 811 2	2 pcs.
6	Connector	9509/3	000.721.950.93	
7	Torque adapter plate	9510	000.721.951.00	
8	Hexagon socket wrench	P 119	000.721.119.00	Used for removing / installing brake calipers. A conventional 10 mm hexagon socket wrench may also be used
9	Retaining block	9509/4	000.721.950.94	2 pcs. Only 1 is necessary for checking transverse lock; 2 are required for checking longitudinal lock.
10	Torque-setting torque wrench covering the range from 5 - 500 Nm (3.7 - 367 ftlb)			Conventional (see Workshop Manual). Depending on torque wrench version, corresponding reduction or union pieces are required for attachment to the adapter plate (No. 7).

Printed in Germany – VII, 1990

No.	Designation	Special tool	Order number	Explanation
11	System Tester 9288	9288	000.721.928.80	
	with			
	connecting cable	9288/1	000.721.928.81	
	and			
	corresponding	9288/4	000.721.928.84	German
	program module	9288/5	000.721.928.85	English
	(depending on language)	9288/6	000.721.928.86	French
		9288/7	000.721.928.87	Italian
		9288/8	000.721.928.88	Spanish

Printed in Germany – VII, 1990

Checking locking moment (friction coefficient) of longitudinal and transverse locks

Important information

Perform check with gearbox cold. Parking brake released, no gear engaged.
Check transverse lock first.

When checking locking moment it is not initial wheel spin moment but breakaway moment (when lock no longer holds) which is measured. A torque-setting torque wrench is therefore required.

Checking

Procedure	Instructions
1. Carry out general preparatory work as described on right	– Remove rear wheels – Using original wheel nuts **attach** torque adapter plate (Special Tool 9510) **to rear left-hand wheel hub** – Remove underfloor paneling and component protection elements – Have torque-setting torque wrenches covering approx. 5 - 500 Nm (3.7 - 370 ftlb) in readiness. Appropriate reduction or adapter pieces are necessary for connecting these to adapter plate.

Procedure	Instructions
2. Prepare vehicle for testing transverse locks To do so: – Remove rear left-hand brake caliper (do not open brake hydraulics) and insert retaining block - Special Tool 9509/5 - into brake caliper instead of brake disc. – Connect manometer to transverse lock cylinder, first removing ignition key for safety reasons. – Plug System Tester 9288 into diagnosis socket. – Bleed manometer.	– Disconnect ground cable and retainer (A) from left-hand rear axle link (arrows), first extending brake hose retainer (B). This means brake line or brake hose does not have to be opened when brakecaliper is removed. 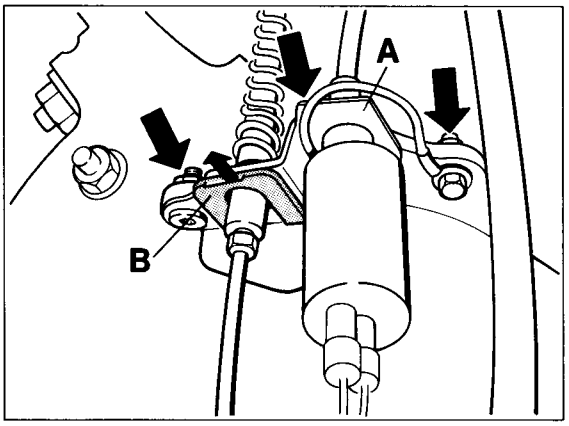 476-D39/45 – Remove rear left-hand brake caliper using suitable conventional hexagon socket wrench or Special Tool P 119. Insert retaining block (No. 9) into brake caliper instead of brake disc. Place brake caliper on rear axle link or other convenient place. 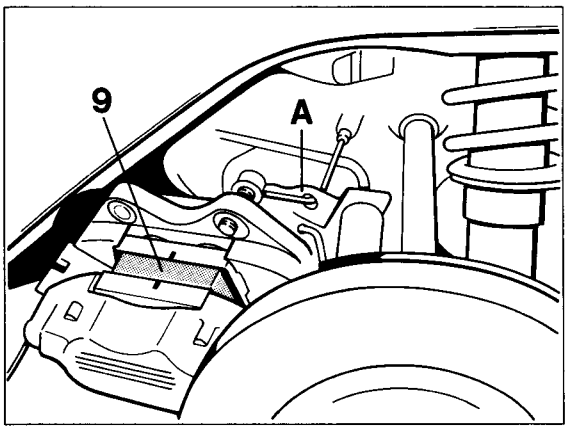 477-D39/45

Procedure	Instructions

– Connect inlet union (No. 3) to measuring line (No. 2). Then **fit** this assembly, in conjunction with inlet-union screw, seal rings and connector (No. 4/No. 5/No. 6) **instead of bleed valve to transverse lock servo cylinder.**

Important information

Tighten No. 4 and No. 6 carefully, or apply counter-pressure when tightening them to avoid misalignment. Failure to observe this precaution could cause connector (No. 6) to break off. Before opening bleed valve, ensure lock cylinder is not under pressure (e.g. due to full-lock button). It is therefore best to remove ignition key.

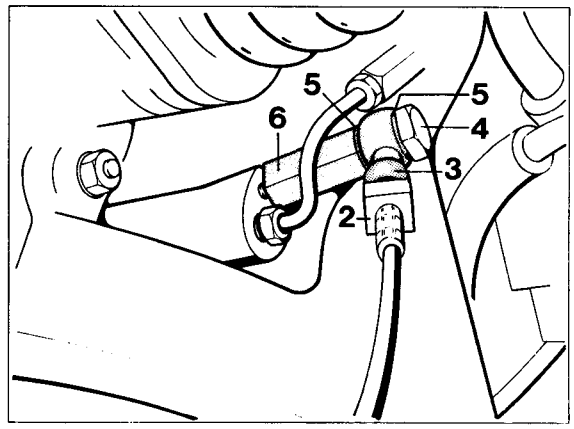

478-D39/45

Procedure	Instructions

– Connect high-pressure measuring line (No. 2) to manometer (arrow) and attach manometer in rear left-hand area of wheel house where it is clearly visible.
Connect System Tester 9288 (P. D39/45-9).
Bleed manometer. To do so, activate locking solenoid valves with System Tester in menue for drive links / bleeding and drain brake fluid from bleed valve until no more air bubbles appear.
(Drain fluid into receptacle).
Close bleed valve and press stop button. Move to position for pressure reduction.

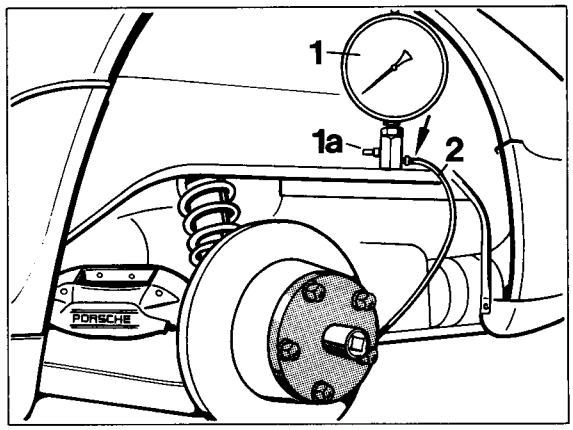

480A-D39/45

Procedure	Instructions
3. Measuring transverse lock moment (locking moment to pressure)	
Checking conditions / important information – Gearbox cold / handbrake released, no gear engaged – Before measuring, briefly close lock once (applying full pressure) – To measure locking moment, only turn towards the front. Measuring should be performed via the adapter plate on rear left-hand wheel hub – Completely lock both front wheels and rear right-hand wheel by means of footbrake – Use torque wrench to measure breakaway moment / locking moment at prescribed testing pressures. **Do not turn jerkily. Work up gradually from lower value to breakaway moment / locking moment.** – Produce test pressures with System Tester 9288 by activating transverse lock solenoid valve (menue drive links / check transverse lock).	– Switch on System Tester. Select "check transverse lock" – Completely close transverse lock by means of approx. 20 impulses (pressure at manometer approx. ≈140...180 bar). Pressing function button on Tester = 1 Impulse – Move to position for pressure reduction and start with measurement 1 – **Measurement 1 = manometer pressure 0...5 bar** Set torque wrench to approx. 5 Nm (3.7 ftlb) and connect to adapter plate on rear left-hand wheel hub (No. 7). Observe ratchet direction of torque wrench. During measurement operate footbrake so that remaining three wheels are completely locked. Using torque wrench carefully (i.e. not jerkily) turn **forwards.** If wheel hub does not turn but torque wrench starts clicking, actual locking moment has not been reached. Set torque wrench to higher value and repeat procedure. Actual locking moment is reached when wheel hub turns just as torque wrench begins to click. If wheel hub turns but wrench does not click, torque setting on wrench is too high (actual value is lower).
Test pressures / measuring items Measurement 1 = press. from 0...5 bar Measurement 2 = " " 20...40 bar Measurement 3 = " " 40...60 bar Measurement 4 = breakaway moment min. 500 Nm (367 ftlb), pressure 80 bar or greater Measurement 5 = Check transverse lock admission valve. Prescribed value approx. 2.0...3.5 bar – Observe checking conditions on left	

Procedure	Instructions
Time limit values (permissible locking values) and corresponding pressures are shown on P. D39/45-38.	For checking breakaway moment, measure at several points (angles) within one turn of the wheel.
Possible causes of deviation from prescribed figure – Checking conditions not met. E.g. wheels not completely locked, manometer or locking hydraulics not properly bled – Clutch plates not in good condition – Hydraulic pressure not acting on clutch plates at level indicated, e.g. due to incorrectly adjusted end support screw of engaging lever (only with adjustable lever/engaging lever is in contact).	Once locking moment has been reached, immediately read off pressure on manometer. Note both actual values (moment + pressure). 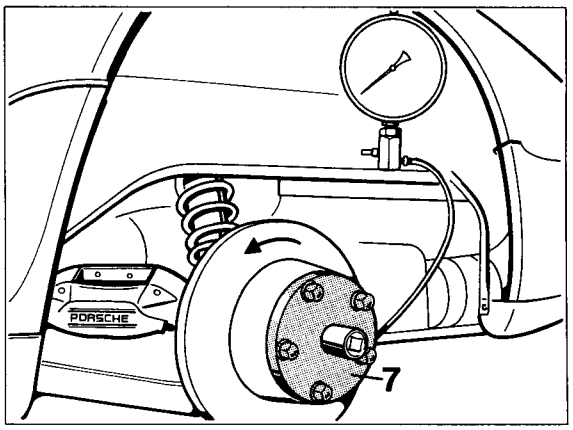 480B-D39/45 – **Measurement 2 = manometer pressure 20...40 bar** Produce test pressure with System Tester with suitable number of impulses. Set torque wrench to minimum value (depending on pressure) in accordance with limit table (P. D39/45-38). Repeat procedure as for measurement 1. – **Measurement 3 = manometer pressure 40...60 bar.** Repeat procedure as for measurements 1 and 2. – Compare actual values of measurements 1/2/3 with those prescribed on P. D39/45-38.

Procedure	Instructions
	Example: **Measurement 2 = manometer pressure 20...40 bar** Actual values: manometer pressure 31 bar measured locking torque 260 Nm (190.6 ftlb) Prescribed value acc. to table 31 bar 200...290 Nm (146.6...212.6 ftlb) Measurement 2 in order, as it is within tolerance margins (limit table) – **Measurement 4 = min. locking moment 500 Nm (367 ftlb) must be ensured. Pressure 80 bar or more.** – **Measurement 5 = admission valves** Move to position for pressure reduction and read off manometer pressure. Prescribed value: approx. 2.0...3.5 bar. If necessary, for values outside tolerance and with low pressure - max. 20 bar - repeat process, reducing pressure by switching off ignition.

Printed in Germany - VII, 1990

Procedure	Instructions
4. Switch off System Tester remove ignition key (lines from solenoid valve to admission valves therefore not under pressure)	– Switch off System Tester. For following point remove ignition key for safety reasons.
5. Prepare vehicle for longitudinal lock measuring: – Remove manometer measuring line **from transverse lock cylinder** and attach in same way to **longitudinal lock cylinder**.	– Cautiously open measuring line on transverse lock on transverse lock cylinder (admission pressure). Remove measuring line and fit bleed valve.
– Also remove rear right-hand brake caliper (without opening hydraulics) and insert second retaining block - Special Tool 9509/4 - into brake caliper instead of brake disc. If a brake pedal clamp was used for transverse lock measurement, remove this first	– Fit measuring line assembly (No. 3 and No. 2) in conjunction with inlet-union screw (No. 4), seal rings (No. 5) and connector (No. 6) instead of bleed valve on longitudinal lock cylinder. **Important information** Tighten No. 4 and No. 6 carefully, or apply counter-pressure when tightening them. Avoid misalignment, otherwise connector (No. 6) could break off.
– Bleed transverse lock. Bleed manometer.	– Remove rear right-hand brake caliper and insert second retaining block - Special Tool 9509/4 - into brake caliper instead of brake disc. Do not open brake hydraulics. Bleed transverse lock and manometer with System Tester 9288. Since these points are approximately the same as procedure for transverse lock testing, refer to point 2 for details if necessary.

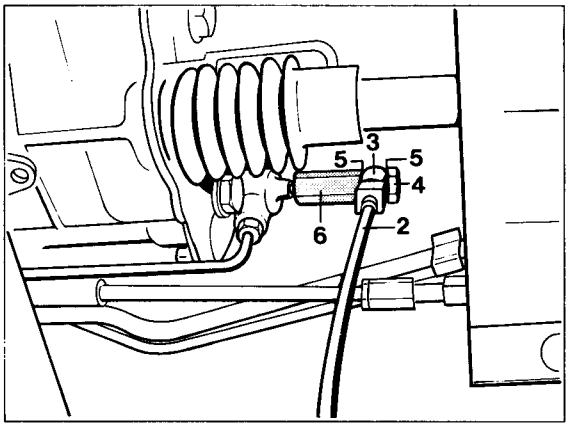

479-D39/45

Procedure	Instructions
6. Perform longitudinal lock check (locking moment to pressure) Same checking conditions as for transverse lock, except that only front wheels are locked.	– Same procedure as for transverse lock testing except for following points:
Test pressures / measuring procedures	
Measurement 1 = press. from 0...5 bar Measurement 2 = "" 10...30 bar Measurement 3 = "" 30...60 bar Measurement 4 = Breakaway moment min. 500 Nm (367 ftlb), pressure 60 bar or over. Measurement 5 = admission valve of longitudinal lock. Prescribed value approx. 2.0 ..3.5 bar	Only front wheels are locked On System Tester select menue for drive links / checking longitudinal lock Transverse lock is automatically closed by System Tester when menue item for checking longitudinal lock is selected Test pressures for measurements 1...4 are different (see left-hand column)
Limit values (permissible locking values) and corresponding pressures are shown on P. D39/45-38.	– Completely close longitudinal lock using System Tester – Move to position for pressure reduction and start with measurement 1 as described in point 3. – Compare actual with prescribed values (S. D39/45-38)
Possible causes of deviations from prescribed value	
Checking conditions not met. E.g. wheels not completely locked, manometer or locking hydraulics not properly bled.	
Transverse lock values not correct, causing deviations for longitudinal lock	
Longitudinal lock clutch plates not in good condition	
Hydraulic pressure not acting on clutch plates at level indicated, e.g. due to incorrectly adjusted end support screw of engaging lever (only with adjustable version / engaging lever is in contact).	

Printed in Germany - VII, 1990

Procedure	Instructions
7. Remove manometer with System Tester switched off and ignition key removed (so only admission pressure in measuring line applies). Fit bleed valve and bleed longitudinal lock.	– Cautiously open measuring line on longitudinal lock cylinder (due to admission pressure). Remove measuring line and fit bleed valve. – Bleed longitudinal lock using System Tester 9288. Switch off System Tester.
8. Fit rear brake calipers and disconnect System Tester. Correct brake fluid level. Check locking hydraulics for leaks.	– Tighten brake cylinder fastening bolts to 85 Nm (62.3 ftlb). Fit bracket on rear axle links and fit brake hose bracket. **Operate brake pedal several times.** – Disconnect System Tester and correct brake fluid level with pressure reservoir completely full (after pump unit has automatically switched off). **On no account top up above "max. " mark.** – Check exterior of hydraulic lines (brake and lock) in area of rear axle for leaks. To activate full system pressure in lock servo cylinders, turn full lock button on center console to the right **with ignition switched on**. To disengage lock turn switch to left.
9. Fit rear underfloor panels, component protection elements and rear wheels. Carry out short test drive (locks and function of brakes).	

Limit values - locking moment to pressure

Transverse lock

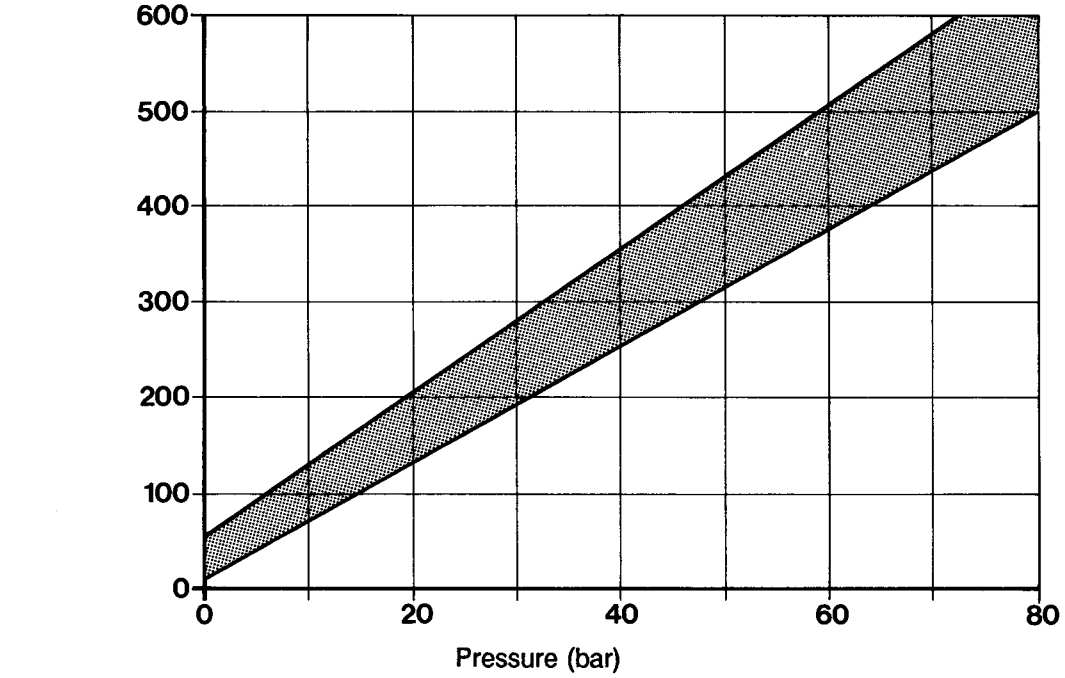

Longitudinal lock

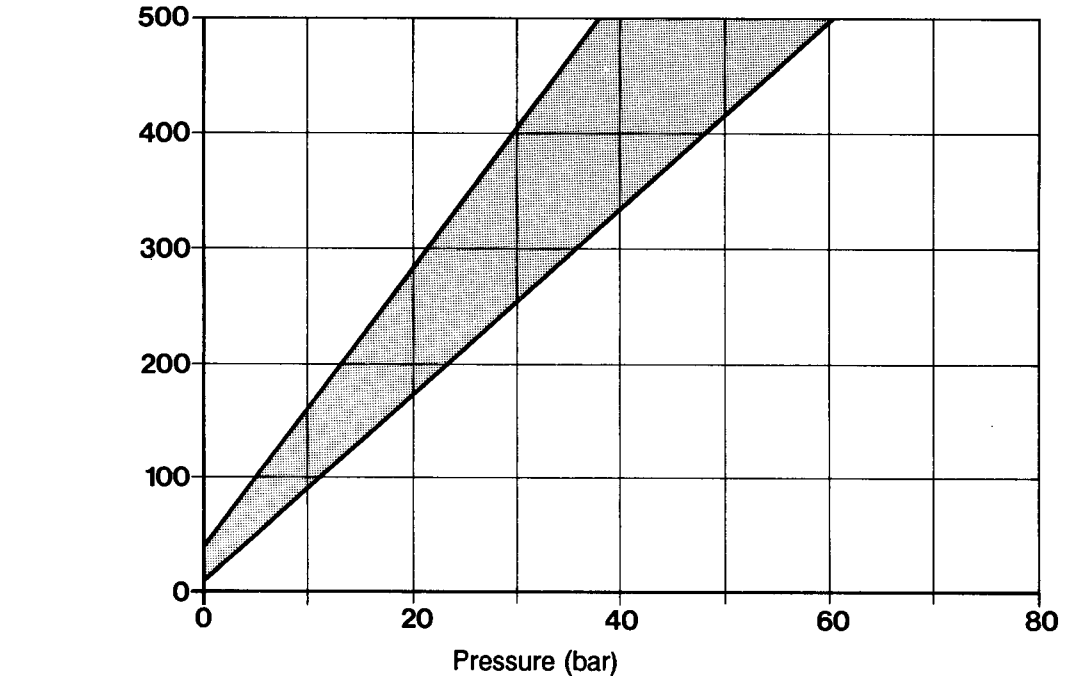

Printed in Germany – VII, 1990

Checking admission valves in locking hydraulics (lock activation)

General

The admission valves are usually also checked when the friction values of the longitudinal and transverse locks are checked (point 4).

One admission valve is located in the pressure lines in front of each of the longitudinal and transverse lock servo cylinders (arrow).

If admission pressure is too high, creaking noises can occur. No pressure is also not good, for reasons of wear and handling dynamics. **When replacement is necessary, do not confuse with PSD admission valve in the 928.**

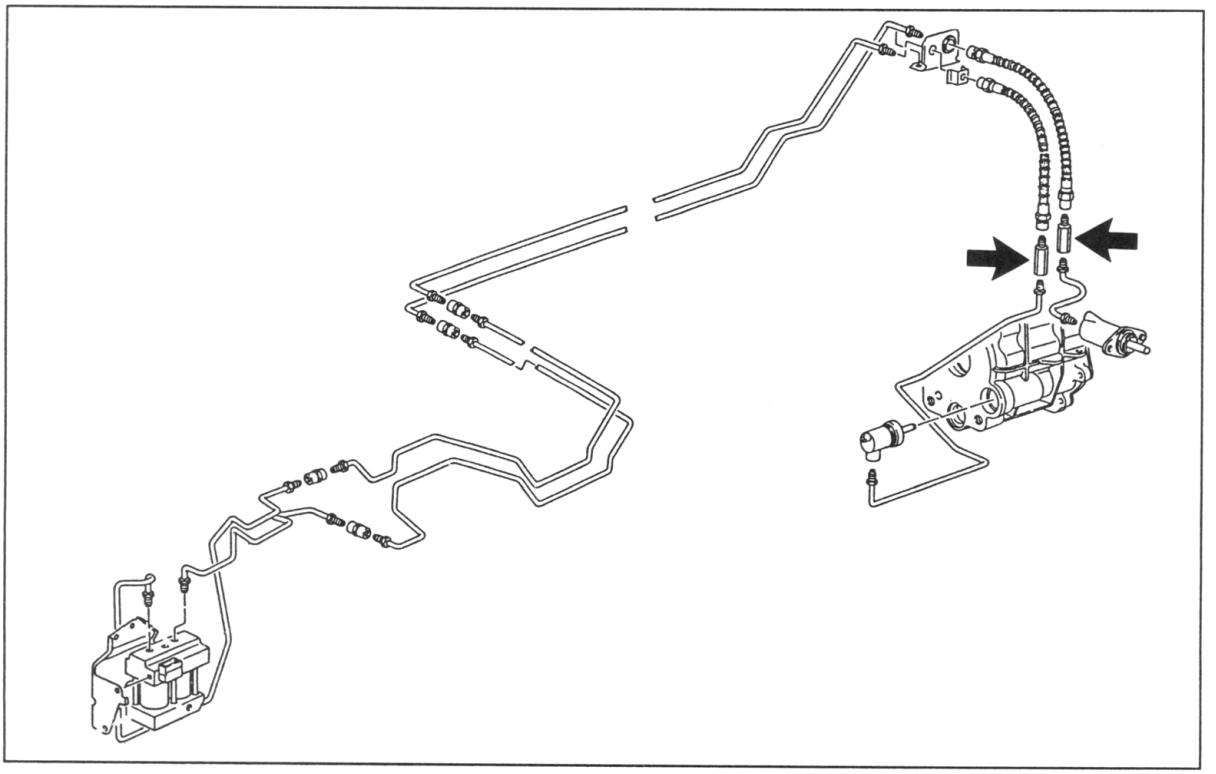

D39/45-39

Prescribed values / differentiating characteristics of admission valves

Type	Presc. value	Difference/marking
911 Carrera 4	approx. 2.0...3.5 bar	2 - 3 stamped on valve
928 with PSD	approx. 3.0...4.5 bar	3 - 4 stamped on valve

Checking admission valves

Procedure	Instructions
1. Prepare vehicle for admission valve check. **To do this:** – Depending on which admission valve is being checked first, connect manometer to relevant lock servo cylinder, first removing ignition key for safety reasons (= no pressure in lines from solenoid valve to admission valves). – Connect System Tester 9288 to diagnosis socket. – Bleed manometer.	– Connect inlet union (No. 3) to measuring line (No. 2). Fit this assembly, in conjunction with inlet-union screw, seal rings and connector (No. 4/No. 5/No.6) **instead of bleed valve on relevant lock servo cylinder**. Connect high-pressure measuring line (No. 2) to manometer. **Important information** Tighten No. 4 and No. 6 carefully, or apply counter-pressure when tightening to avoid misalignment. Failure to observe this precaution could cause connector (no. 6) to break off. Before bleed valve is opened, ensure lock cylinder is not under pressure (e.g. due to full-lock button). For this reason it is best to remove ignition key.

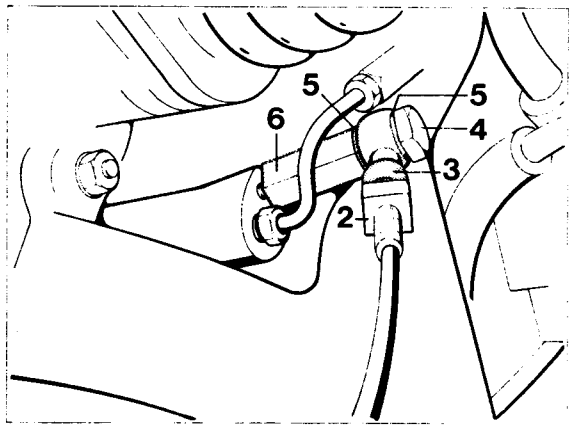

478-D39/45

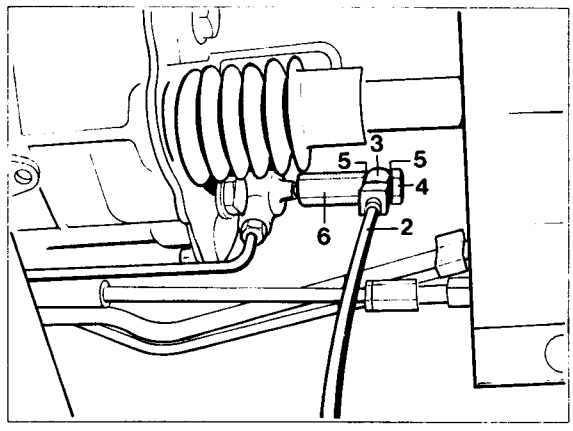

Procedure	Instructions
	- Connect System Tester 9288 (P. D39/45-9). Bleed manometer. To do so, activate locking solenoid valves with System Tester in menue for drive links / bleeding and let off brake fluid from bleed valve until no more air bubbles appear (drain fluid into receptacle). Close bleed valve and press stop button. Move to position for pressure reduction.
	Important information
2. **Check functioning of admission valves as described below:** Using System Tester 9288 activate longitudinal or transverse lock solenoid valve (menue drive links / longitudinal or transverse lock) with 1 - 2 impulses, then move to position for pressure reduction. After a short wait (manometer damping), read off pressure on manometer. **Prescribed values P. D39/45-39**	If admission pressure is too high (before a valve is replaced), again build up a slight pressure and, unlike previous test, cause pressure to fall by switching off ignition. Loss of admission pressure should not exceed 0.5 bar within 5 minutes.
3. After checking, bleed both longitudinal and transverse locks, then correct brake fluid level.	– After removing manometer, select System Tester menue for **drive links / bleeding** and let off brake fluid from bleed valves of longitudinal and transverse lock servo cylinders until no more air bubbles appear. – Disconnect System Tester and correct brake fluid level with pressure reservoir completely full (after pump unit has automatically switched off). **On no account top up above "max. " mark.**

Preventing confusion of longitudinal and transverse lock lines

General

- This test ensures that no electrical or hydraulic lines for lock activation/operation have been mixed up. Such a mix-up could for instance occur following an accident repair for which relevant parts (major components, lines and hoses) have been removed.
- **System Tester 9288 is required for testing.**
- Testing is carried out with vehicle completely jacked up.

Testing

1. Completely jack up vehicle (all 4 wheels free).
2. First check general functioning of transverse lock (correct configuration).
3. Connect System Tester 9288 to diagnosis socket (P. D39/45-9). Switch on System Tester and ignition. Call up PDAS menue for drive links and select "check transverse lock".
   Display shows:
   Transverse lock
   1 = Pressure reduction
   No. of impulses - 0 - .
4. With 0 impulses (display reading) it must be possible to turn rear left-hand wheel. **The rear right-hand wheel must be held immobile during testing**. Input 1st impulse and turn rear left-hand wheel. Input 2nd impulse and turn wheel etc. With increasing number of impulses, wheel should become harder and finally impossible to turn. With any other result (e.g. wheel does not become harder to turn, even though solenoid valve is audibly being activated with each impulse), start with troubleshooting (P. D39/45-44).
5. Check general functioning of longitudinal lock (correct configuration). **To do so, engage parking brake and hold front right-hand wheel immobile during testing.**
6. With the System Tester select "check longitudinal lock" in menue for drive links. With 0 impulses it must be possible to turn front left-hand wheel (front right-hand wheel immobilised). Input 1st impulse and turn wheel, input 2nd impulse and turn wheel etc. **Prescribed reaction:** With increasing number of impulses, wheel should become harder and finally impossible to turn.

Procedure for irregularities

– **First** check whether activation system for lock solenoid valve has been mixed up. To do so, disconnect control unit plug of PDAS/ABS control unit and plug in lock valve block (arrow) with ignition switched off.

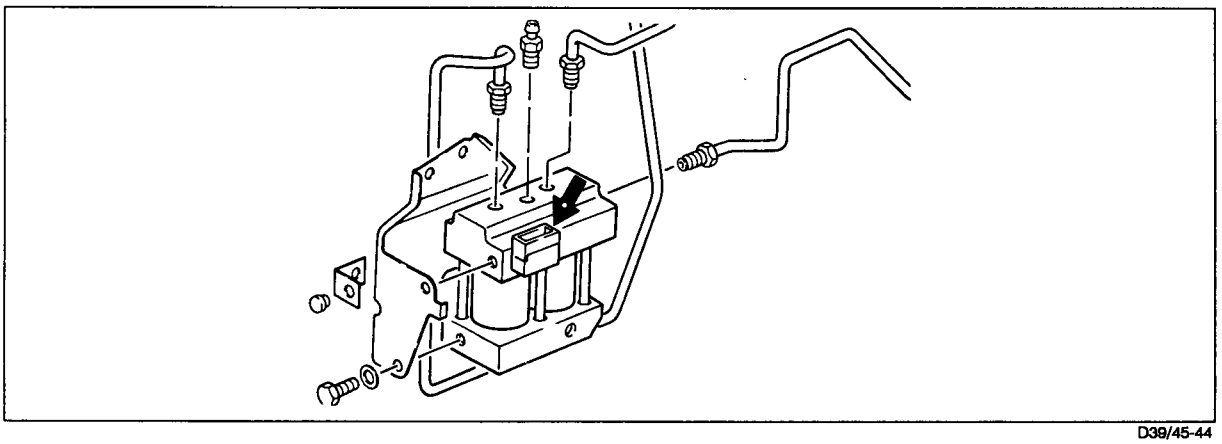

D39/45-44

– Carry out continuity test (Multimeter)

Prescribed continuity between:

PIN 21 on control unit plug and **PIN 3** on solenoid valve plug = line for transverse lock activation

PIN 18 on control unit plug and **PIN 4** on solenoid valve plug = line for longitudinal lock activation

PIN Nos. 1...4 for the solenoid valves are marked on the solenoid valve plug and the valve block.

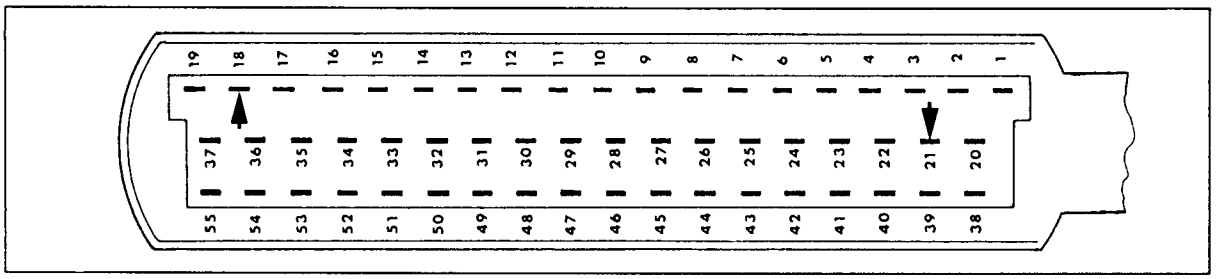

– **If this check is in order**, the hydraulic lines from the valve block (solenoid valves for longitudinal and transverse locks) to the lock servo cylinders have been mixed up.

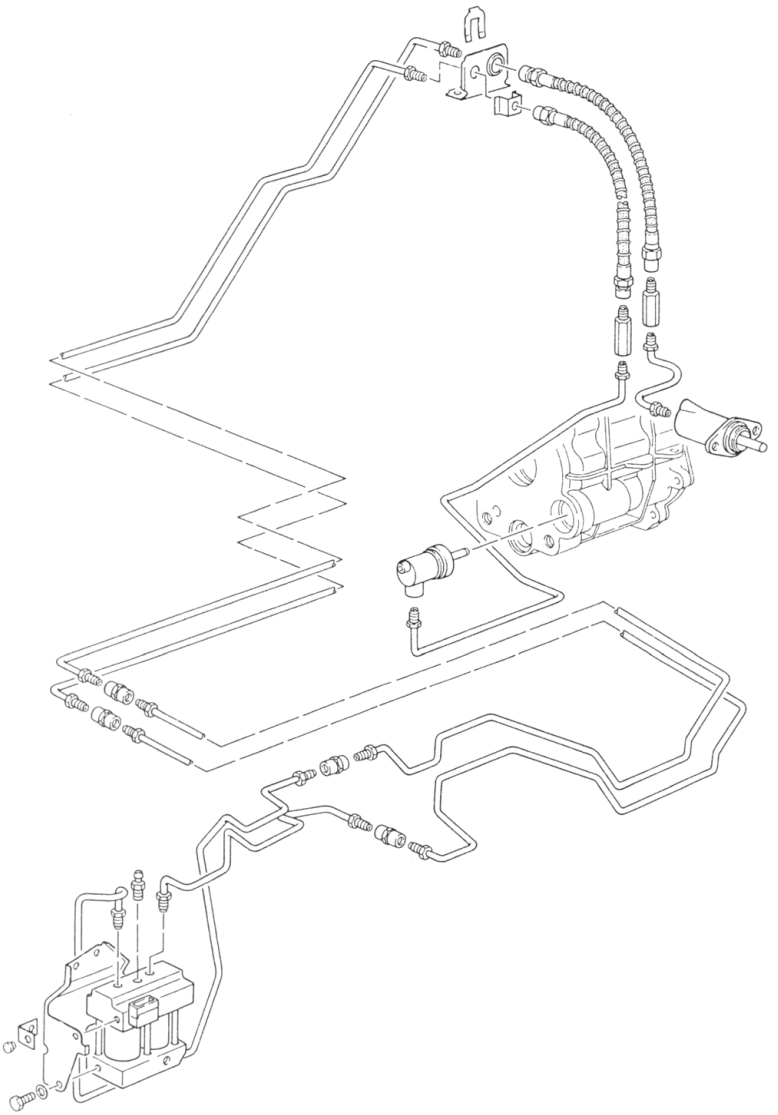

– **After rectifying this error, carry out another check with the System Tester for additional confirmation.**

Tightening torques for mechanical brake system

Location	Thread	Tightening torque Nm (ft.lb.)
Brake calipers to front and rear axles	M 12	85 (62.5)
Brake disk to wheel hub (front and rear axle)	M 6	5 (3.5)
Brake cover plate to front and rear axles	M 6	10 (7.5)
Speed sensors front and rear axle	M 6	10 (7.5)
Ball pin to brake push-rod	M 10	35 (26)
Wheel to hub	M 14	130 (96)

Printed in Germany – II, 1989

Technical Data

The technical data are valid for the 911 Carrera 4 and 911 Carrera 4 Turbo Look.
C4 TL = 911 Carrera 4 Turbo Look.

Designation		Remarks, dimensions	Wear Limit
Service brake (foot-operated)		Hydraulic dual circuit brake system with front/rear axle brake circuit division. Hydraulic brake booster, inboard vented brake discs with four-piston fixed calipers front and rear. The pushrod circuit is applied to the front axle. ABS standard.	
Brake booster		hydraulic	
Boosting factor		4.8	
Brake master cylinder	Ø front	23.81 mm	
	Ø rear	23,81 mm	
	Stroke	20/12 mm	
Brake force regulator			
Switchover pressure reducing factor			
	C4	55 bar – 0,46	
	C4 TL	33 bar – 0,46	
Brake disc Ø	front	298 mm	
	rear	299 mm	
Effective brake disc Ø	front	248 mm	
	rear C4	246 mm	
	rear C4 TL	249 mm	
Piston Ø in brake caliper			
	front	2 x 40 + 2 x 36 mm	
	rear C4	2 x 30 + 2 x 28 mm	
	rear C4 TL	2 x 34 + 2 x 30 mm	
Brake pad area			
	front	172 cm^2	
	rear	172 cm^2	
Total brake pad area		344 cm^2	
Pad thickness	front	approx. 12 mm	2 mm
	rear	approx. 12 mm	2 mm

Printed in Germany – XVIII, 1992

Description	Remarks, Specification	Wear Limits
Brake disc thickness (new), front	28 mm	
rear C4	24 mm	
rear C4 TL	28 mm	
Brake discs Minimum thickness* after machining		
front	26.6 mm	26.0 mm
rear C4	22.6 mm	22.0 mm
rear C4 TL	26.6 mm	26,0 mm
Max. brake disc thickness tolerance	0.02 mm	
Max. brake disc lateral runout	0.05 mm	
Lateral runout of wheel hub, max.	0.05 mm	
Max. lateral runout of brake disc in installed state	0.1 mm	
Max. peak-to-valley surface finish after machining	0.006 mm	
Push rod play (measured on brake pedal plate)	approx. 8 mm	
Parking brake	mechanical via brake drums on both rear wheels	
Brake drum Ø	180 mm	181 mm
Brake shoe width	25 mm	
Brake liner thicknesss	4.5 mm	2 mm

* Brake discs may only be machined symmetrically, i. e. uniformly on both sides.

Printed in Germany – XVIII, 1992

Checking Thickness of Brake Pads

Note

All brake pads on one axle must be replaced when the brake pad wear warning lamp lights up or at the latest, however, with a residual pad thickness of 2 mm.

If the warning lamp reports brake pad wear, the warning contact (sender incl. electric lead and plug) must also be replaced. Replacement of the warning contact can be prevented by replacing the brake pads at the latest when worn to a thickness of 2.5 mm. Warning contacts with a ground electric lead core must be replaced. Replacement is not necessary, however, if only the plastic part of the warning contact is ground.

1. Remove wheels to check the brake pads.

2. Check brake pads visually for wear.

Wear limit has been reached when a pad is worn to a residual thickness of 2 mm.

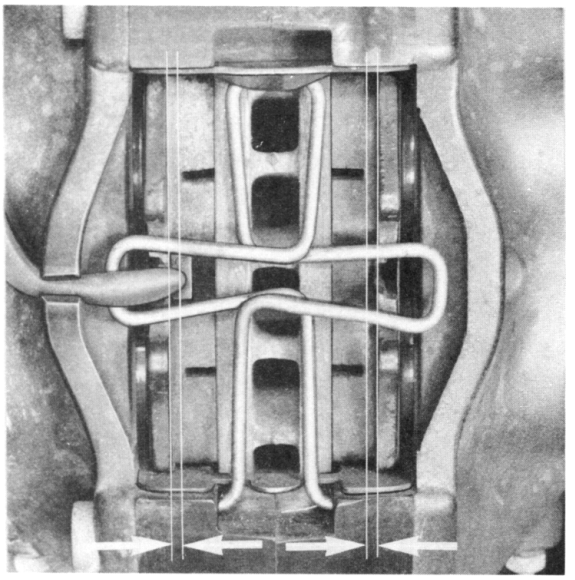

Printed in Germany – III, 1989

Removing and Installing Brake Pads of Four Piston Fixed Caliper Brakes

Notes

Brake pads are replaced in the same manner as for other Porsche vehicle types with four piston fixed caliper disc brakes. There is only a brief description of procedures for this reason. However, always pay attention to the following points.

- **Use specified brake pads (see Parts Catalog).**

- **Replace damping plates each time brake pads are replaced.**

- Damping plates are covered with an adhesive and protective sheet.
  This protective sheet must be pulled off prior to installation.

- **Pad backplates (backs of brake pads) must not be lubricated with grease.**

Removing

- Compress cross spring in the middle and take it out of the holder. **Press (release) cross spring in area of holder in direction of the brake disc at the same time or before the beginning of compression.** Damage on the holder is prevented in this manner.

- Move out warning contact on the brake caliper and pull warning contact out of the brake pad plate.

Note

Replace warning contacts with ground or ground through electric lead cores. A warning contact can be reused when only the plastic part has traces of grinding.

- Pull out brake pads with a brake pad impact puller and **always** conform with the following points.

  Move out brake pads together with the damping plates. Insofar as this is not possible (depending on the wear condition of brake pads), loosen the damping plates on the brake pad backplate with a spatula prior to removal of the pads. First set back the brake pads with a piston back setting tool as far as possible in both cases. If applicable, first draw some of the brake fluid out of the supply tank.

Installing

- If applicable, set back piston into neutral position with a back setting tool.

- Clean seating and guiding surfaces of brake pads in the brake calipers with alcohol and a cylindrical or special brush. **Always make sure that the dust caps of brake pistons are not damaged during this step.**

Printed in Germany – III, 1989

- Insert **new damping plates** in the pistons. Since damping plates are covered with an adhesive and protective sheet, **this protective sheet must be pulled off** prior to installation.

- Insert brake pads. **Check for correct type of brake pads.**

Note

Brake pad backplates (backs of brake pads) must not be lubricated with grease. However, in order to prevent seizure of brake pads in the brake calipers due to corrosion, give the seating and guiding surfaces a thin coat of grease.
Use Optimoly HT (copper paste or Plastilube (Schillings, P. O. Box 1703, D-7080 Aalen) for this purpose.

- Lubricate attachment eyes of the cross springs with Optimoly **TA** or Plastilube.

If applicable, mount a new cross spring that its flat side faces the brake disc.
Make sure that the cross spring engages correctly (arrow). Never engage the spring with force (danger of damaging holder).

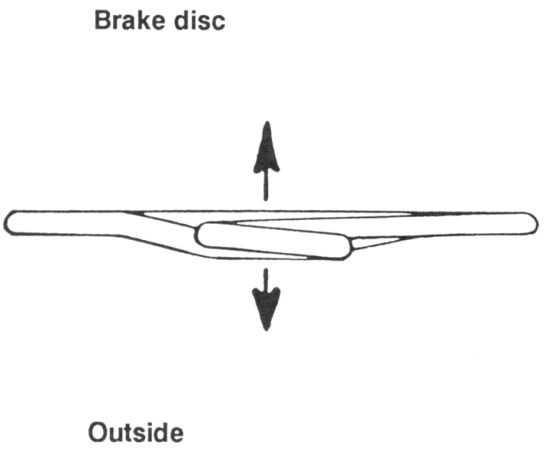

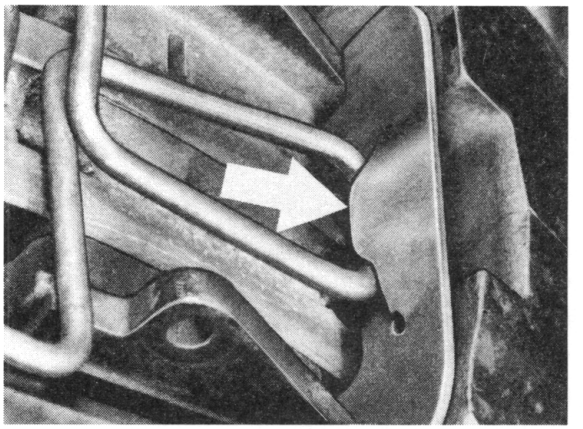

- Insert warning contact lead and warning contact. If necessary, disengage the cross spring again for this purpose.

- Operate brake pedal of a stopped car firmly several times to move the brake pads into the seating equal to that of operating state.
Turn on ignition and operate brake pedal so often until the electric pump of the pump (for brake booster and lock control) is heard to run. Check / correct brake fluid level after the pump has been switched off.

Running-in Brake Pads

New brake pads require a running-in time of approx. 200 km (120 miles). Their most favorable friction and wear values are first reached then. During this period the brake should only be used for full-stop braking from high speed in an emergency situation.

Printed in Germany – III, 1989

Adjusting Brake Push Rod / Checking Stop Light Switch Adjustment

Adjusting Brake Push Rod

The brake pedal does not have a stop. The permanently set clearance in the brake booster is guaranteed, since with a correctly adjusted brake push rod the brake pedal does not have any support in neutral position. A push rod play **of approx. 8 mm** will be **noticed** on the pedal plate of the brake pedal when operating by hand.

The position of the brake pedal is changed by correcting the push rod adjustment on pivot head (3). In this case it is therefore also necessary to check the stop light switch adjustment.

The brake push rod is adjusted correctly, if the brake pedal plate is at the same height (± 3 mm) as the clutch pedal plate (clutch pedal in neutral position).

Checking Stop Light Switch Adjustment

Stop lights must light up after the brake pedal has traveled 6 to 16 mm (measured at the middle of the pedal plate).

If the stop lights light up with less than 6 mm pedal travel, turn stop light switch (2) clockwise until it responds within the tolerance range (electric lead and plug must not be damaged in this step). Insofar as the correction range of the stop light switch is not sufficient, adjust the brake pedal on the pivot head of brake push rod (3) (shorten the push rod).

If the stop lights light up after 16 mm pedal travel, adjust the brake pedal on the pivot head of the brake push rod (lengthen the push rod) until the stop light switch responds in tolerance range.

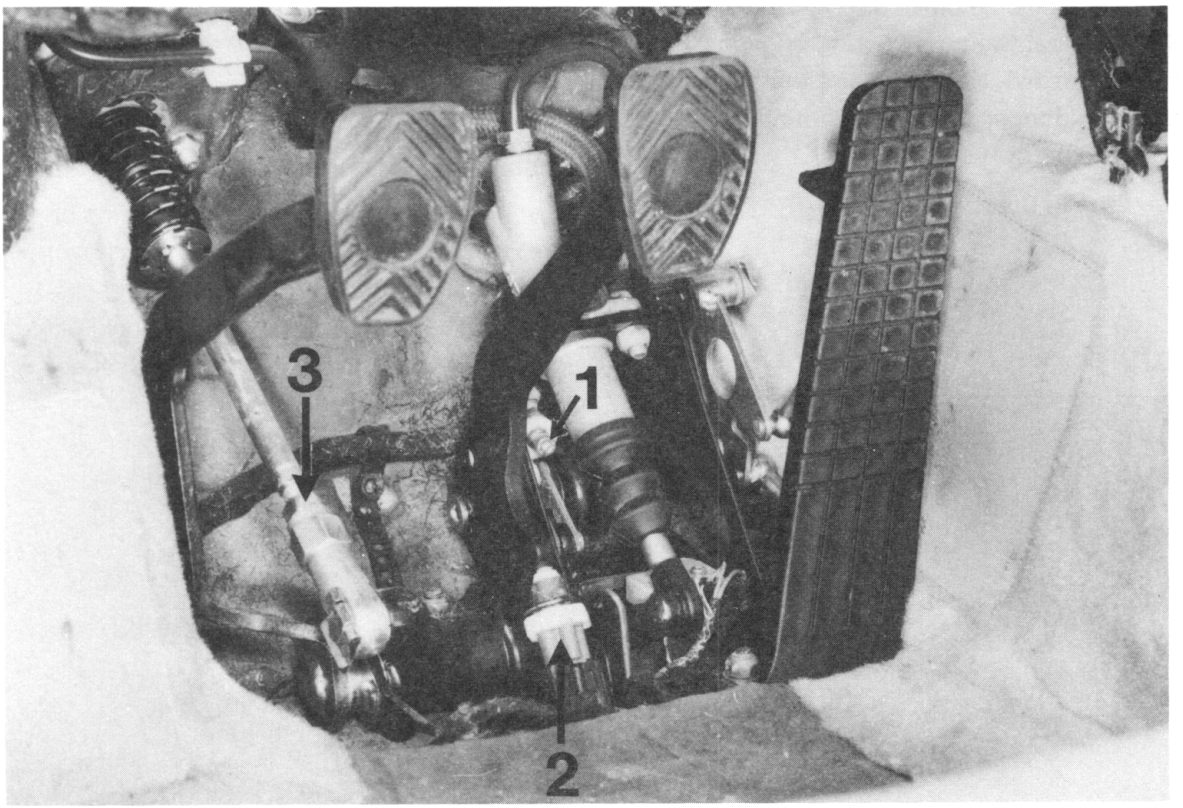

88/464

Printed in Germany – III, 1989

Checking and Adjusting Parking Brake

Checking Dead Travel of Parking Brake Lever

The parking brake employs brake liners without asbestos. Basically a parking brake with asbestosless brake liners must never be adjusted in such a manner that the liners must be "ground free" during operation.

Insofar as the parking brake lever can be pulled up more than 4 teeth with application of medium force, without any braking effect, the parking brake must be adjusted.

Adjusting Parking Brake

1. Remove rear wheels.

2. Release parking brake lever and push back disc brake pads on the rear axle until the brake disc can be turned easily.

3. Loosen adjusting nuts on the cable holder (arrow) until the cables are without tension.

Note

The cable holder is accessible after removal of the tray behind the parking brake lever (two mounting screws).

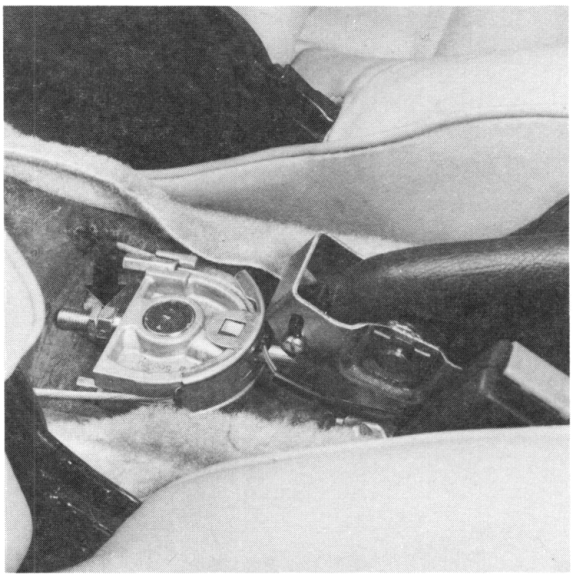

88/463

4. Insert a screwdriver through the bore of the brake disc and turn the adjusting device until the wheel can no longer be turned. Turn back the adjusting device afterwards until the wheel can be turned easily. *Then turn back (loosen) by two more catches.*

5. Pull up parking brake lever two teeth and turn adjusting nuts on the cable holder so far that both wheels are hard to turn by hand.

6. Release the parking brake lever and check whether both wheels can be turned easily.

Printed in Germany – III, 1989

Checking brake disc lateral runout

1. Measuring requirements: No tilt play present at wheel.

2. Fit adapter plate (Special Tool 9510/1) **to wheel hub**. Tightening torque of wheel nuts (mounting nuts): 130 Nm (96 ftlb).

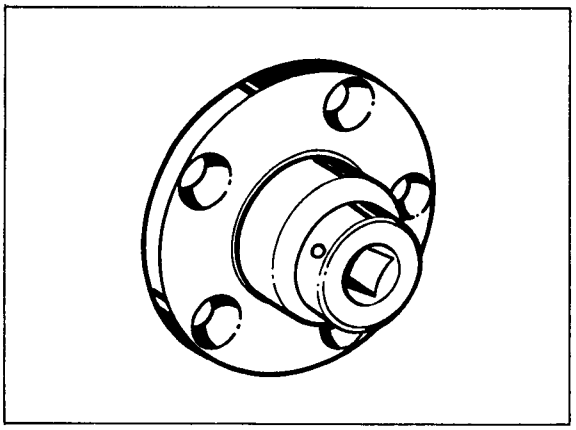

1035 - 46

3. Engage dial gauge holder, e.g. Ate Part No. 03.9314-5500.3/01, into brake caliper, determine center position and fit by turning the wing screw.
   If the brake disc cannot rotate freely, push back brake pads slightly.
   Take care not to damage the tab for the spreader spring on the retainer plate of the four-piston fixed calipers when fitting the dial gauge holder.

Note

If required, fit dial gauge holder with Ate conversion kit, Part No. 03.9314-5510.3/01 (longer wing screw and bracket for dial gauge if required).
For two-piston fixed calipers, the brake pads must be removed to allow the dial gauge holder to be fitted.

4. Fit dial gauge with a slight preload. Place measuring pointer on maximum diameter of braking surface.

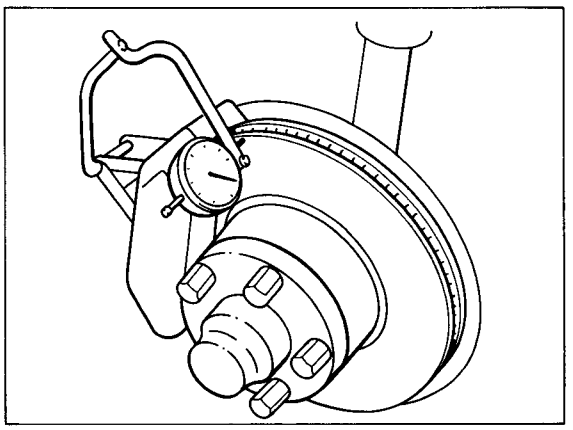

1036 - 46

5. Rotate brake disc and read off runout on dial gauge.
   Max. permissible lateral runout of fitted brake disc **max. 0.1 mm.**

Note

Lateral runout of removed brake disc : max. 0.05 mm.
Lateral runout of wheel hub : max. 0.05 mm.

Printed in Germany – XVI, 1992

6. If the brake disc runout exceeds 0,1 mm, remove the brake disc and check lateral runout of the wheel hub. Mark position of disc with regard to wheel hub.

7. Check wheel hub runout as follows:
Measure once outside (arrow) and once within wheel stud area of hub face.
To fit the dial gauge, use either a magnetic universal dial gauge holder or the dial gauge holder VW 387.

Note

Make sure the brake hoses and brake pipes are not damaged when the brake caliper is removed and installed.

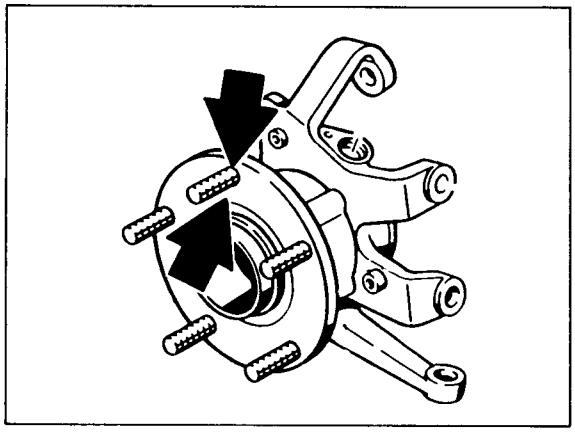

1038 - 46

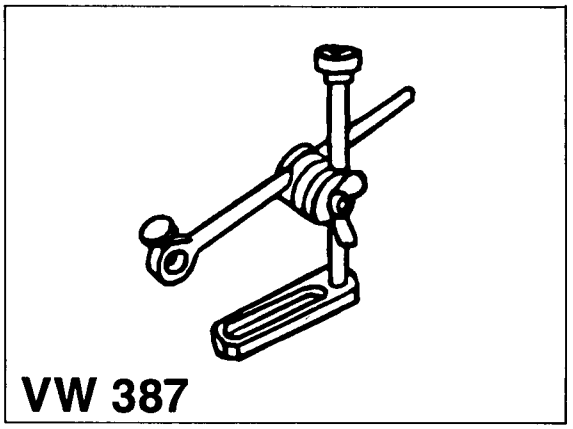

1039 - 46

8. **Excessive lateral runout of wheel hub:**
Replace wheel hub.
Lateral runout of wheel hub o.k.:
Clean leveling and centering surfaces of brake disc and wheel hub. Then coat centering surfaces of wheel hub with a thin coat of Optimoly TA.
Fit brake disc to wheel hub in another position, offset radially with regard to wheel hub.
Repeat measurements with fitted adapter plate - Special Tool 9510/1.
If the lateral runout is still in excess of 0.1 mm, the brake disc must be replaced.

Note

If the brake disc runout has been reduced by offsetting the brake disc radially with regard to the wheel hub, one 6 mm screw may be omitted if two 6 mm countersunk screws had been fitted.

Printed in Germany – XVI, 1992

Checking brake disc thickness

Measure brake disc thickness in approx. 8 places within the braking surface using a micrometer.

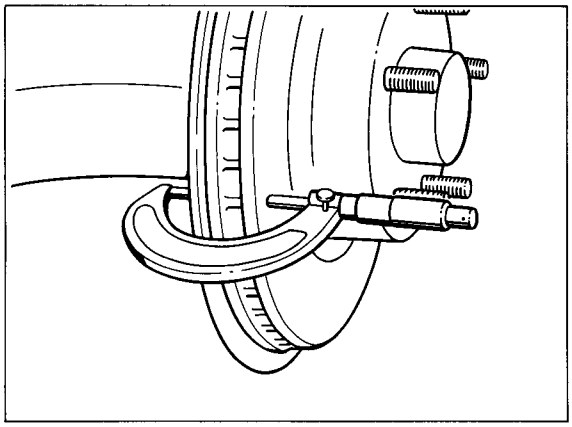

1040 - 46

Printed in Germany – XV, 1992

Dismantling and assembling front brake

Dismantling

1. Remove brake caliper (do not disconnect brake hose or brake line / remove brake hose retainer from spring strut).

2. After removing the countersunk head screw(s), take off brake disc. If the brake disc is binding and cannot be freed with light plastic hammer blows, screw two hexagon head bolts evenly into both 8 mm threads of brake disc and press off brake disc.

Assembly

1. Check condition of all components and replace if required.

2. Clean end face and centering surface of brake disc and wheel hub. Coat centering surface of wheel hub with a thin coat of Optimoly TA.

3. Fit brake disc.

Note

Be careful not to confuse right-hand and left-hand brake discs on Turbo - Look vehicles during reassembly.
The discs may be identified by their involute shape and part number. The part number is indicated on the brake disc.

Left-hand spare part -
3rd group number: uneven digit

Right-hand spare part -
3rd group number: even digit

Example:

- Part No. for left-hand brake disc: 965.351.043.00

- Part No. for right-hand brake disc: 965.351.044.00

4. Fit brake caliper. Tighten brake caliper bolts to 85 Nm (63 ftlb.).
Check for correct position of brake hose and brake line.

Printed in Germany – XX, 1993

Dismantling and assembling rear brake

Dismantling

1. Remove brake caliper (do not open hydraulic brake system).
   To do so, remove ground wire and bracket (A) from left-hand rear-axle trailing arm (arrows). Before starting work, extend brake hose retainer (B).
   This allows the brake line or brake hose, respectively, to remain sealed when the brake caliper is fitted.

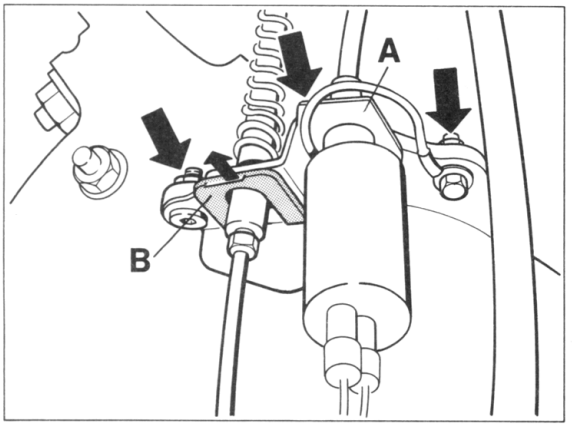

476-D39/45

Note

If the wheel hub must be removed (not required for replacement of parking brake shoes), undo hexagon head nut on drive shaft before removing the brake caliper.

2. Engage a screwdriver into the hose in the brake disc and turn adjuster in the “slackening” direction. Lift off brake disc after removing the countersunk head screw(s).

3. Remove thrust springs (No. 2), adjuster (No. 3/4) and return spring (No. 5). Remove parking brake shoes and return spring (No. 6).

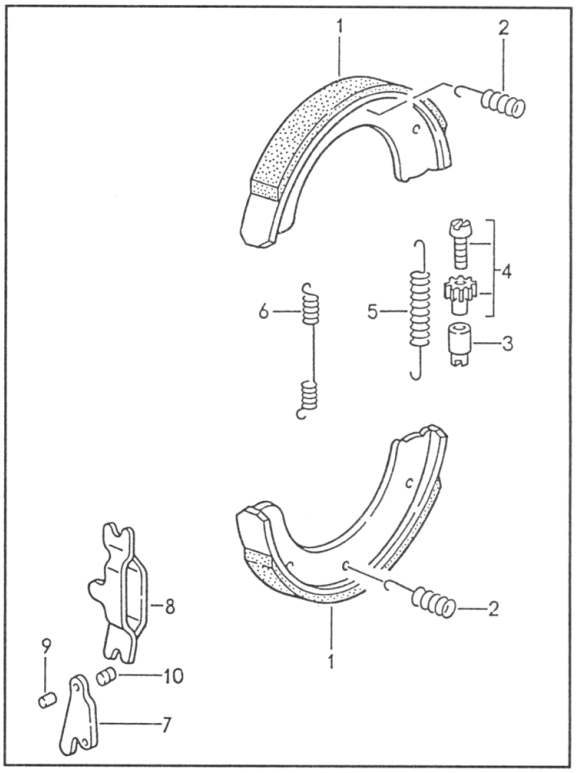

6/03/06

Assembly

1. Apply a thin coat of grease to adjuster (No. 3/4), operating lever pin (spreader lever) and sliding surfaces of parking brake shoes.

2. Install operating lever (spreader lever), brake shoes, return springs, thrust springs and adjuster.

Printed in Germany – XX, 1993

Note

Make sure the hooks (curved spring ends) of the thrust springs are seated correctly around the flange of the wheel carrier (if required, use a mirror to check).

Correct assembly

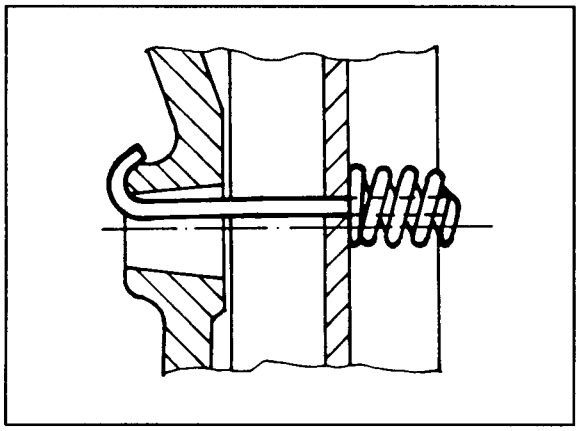

764/2

Incorrect assembly

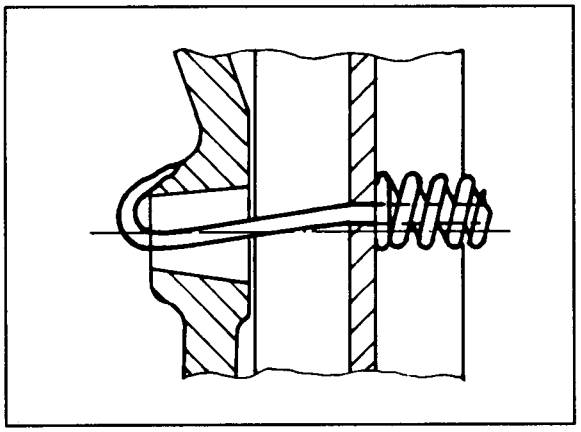

764/1

3. Check parking brake shoes, adjuster, return springs, thrust springs and spreader lever once more for correct seating, making corrections as required.

4. Clean end and centering surfaces of brake disc and wheel hub. Coat centering surface of wheel hub with a very thin coat of Optimoly TA.

5. Fit brake disc.

Note

Be careful not to confuse right-hand and left-hand brake discs on Turbo-Look vehicles during reassembly.
The discs may be identified by their involute shape and part No. (refer to front brake, p. 46 - 11)

6. Adjust parking brake (p. 46 - 5).
   Fit brake caliper. Tighten mounting bolts to 85 Nm (63 ftlb.).

Printed in Germany – XX, 1993

Tightening torques for brake hydraulics

Location	Thread	Tightening Torque Nm (ftlb)
Booster circuit (brake pressure booster and differential lock control)		
Steel pressure pipe at pressure reservoir, brake booster, valve block and pump assembly	10 x 1	14 - 16 (10 - 12) (steel pipes)
Copper pressure pipe at valve block, hose and lock cylinder	10 x 1	12 - 14 (9 - 10) (copper pipes)
Return line at valve block (hollow screw)	M 10 x 1	16 (12)
Threaded coupling (miniature measuring union) at pressure reservoir	M 10 x 1	14 - 16 (10 - 12)
Master cylinder circuits		
Brake pressure pipe at master cylinder, brake hose, brake pressure regulator, distributor, brake caliper and hydraulic unit	M 10 x 1	12 - 14 (9 - 10) (copper pipes)
Brake power controller to angle bracket	M 10 x 1	14 (10)
Brake caliper		
Connecting pipe at brake caliper	M 10 x 1	12 (9)
Bleed valve at brake caliper	M 10 x 1	8 - 12 (6 - 9)

Printed in Germany – XVIII, 1992

Location	Thread	Tightening Torque Nm (ftlb)
Pump assembly		
Pump assembly mount	M 6	10 - 13 (7 - 10)
Pressure warning switch on pump assembly	M 25	26 (19)
Brake booster		
Screw plug in master cylinder	M 10 x 1	12 - 16 (9 - 12)
Brake pressure regulator to bulkhead	M 8	23 (17)
Master cylinder to adapter* on brake booster	M 8	23 (17)

* Do not dismantle this adapter

Information About Four Piston Fixed Calipers

Installation Notes

Brake caliper sections must never be separated.

Piston seals, dirt scraper rings and spring plates can be replaced on an assembled fixed caliper.
Heat mounting screws to about 150° C (300° F) with a hot air blower to remove the spring plates, since the screws are installed with a cement. Use new screws for installation. Coat screw threads lightly with Loctite No. 270.
Brake cylinder paste Unisilikon TK 44 N 2 must be used for the installation of brake pistons.
(This is also applicable **retroactively for other brake calipers** when repairing.)
Unisilikon paste is available from Parts (Part No. 000.043.117.00).

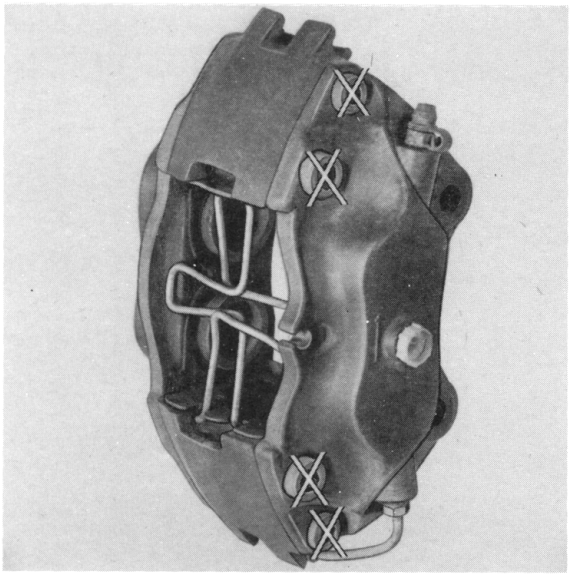

86/937

X = Screws – never loosen or tighten

In order to be able to check the installed position of brake calipers with installed brake pads, fixed calipers have an arrow indicating the brake disc's direction of rotation above the Porsche trademark.

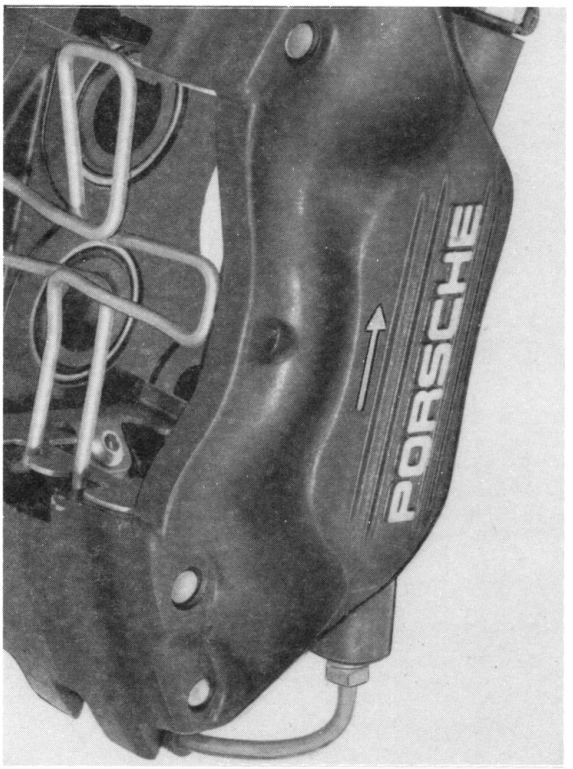

11582

Printed in Germany – III, 1989

Replacing Brake Fluid / Bleeding Brakes and Lock Control

General Information

Since brake master cylinder circuits, consisting of the push rod circuit (for front axle) and intermediate piston circuit (for rear axle) with the ABS hydraulic control unit, are completely independent of the booster circuit (brake booster and lock control), brake fluid replacing and bleeding procedures are divided into different jobs (see next page).

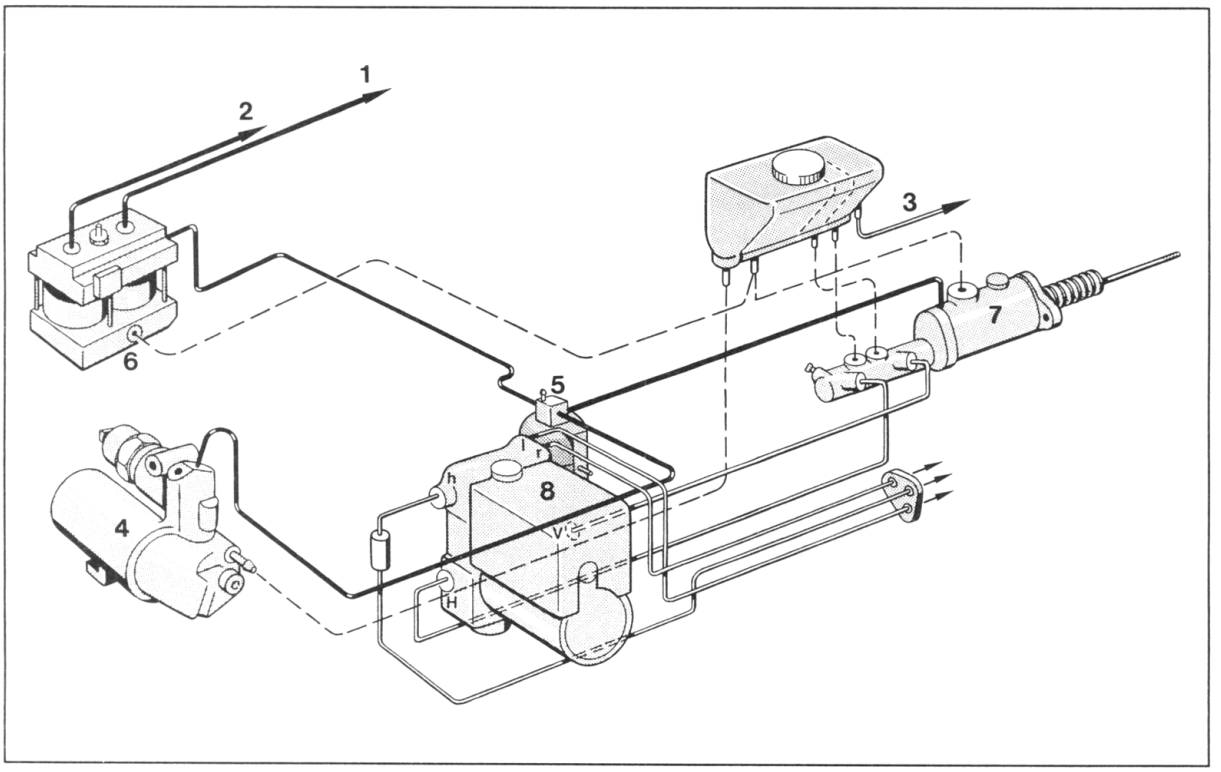

709//1

═══	Brake master cylinder circuits (exception 3)
▬▬▬	Booster circuit (brake booster and lock control)
– – – – –	Return / feed or intake end
1 + 2	To axial and lateral lock cylinders (Q and L)
3	Feed to clutch master cylinder
4	Pump assembly
5	Pressure reservoir
6	Valve assembly (solenoids for axial and lateral locks)
7	Brake booster
8	ABS hydraulic control unit

Printed in Germany – V,1989

Information

- Use only new brake fluid DOT 4.
  Total brake fluid change quantity approx. 1.6 l.

- **Brake fluid change interval and fluid grade have been modified as of MY '93.** For details, refer to page 47 - 101 (911 Carrera 2).

- The brake fluid reservoir is subdivided into chambers approx. as from the middle section downwards.

Procedure/subdivision

1. Brake fluid change (brake, lock control and clutch) /
   Bleed brake master-cylinder circuits*.

2. Bleed lock cylinders and pressure lines *insofar as the hydraulic system was opened after the valve block for lock actuation.*

3. Bleed the lock or brake booster circuit *insofar as parts of the booster circuit were replaced or if the system (also suction side of the pump assembly) was opened.*

Further to 1: (Brake fluid change)*

The brake fluid change is subdivided into two steps.

1st step: Change brake fluid of the brake master-cylinder circuits and clutch hydraulics (conventional). Also valid for bleeding of the brake master-cylinder circuits and clutch hydraulics.

2nd step: Change the brake fluid of the booster circuit (brake booster and lock control). Operate the lock solenoid valve with system tester 9288 and remove brake fluid at each lock cylinder.

* Bleeding the brake master-cylinder circuit and the clutch hydraulics:
Same procedure as for 1st step for the brake fluid change.

Printed in Germany – XVI,1992

Use of an electric filling and bleeding machine is recommended to guarantee fast and practical **replacement of the brake fluid**.

- Pour new brake fluid in the supply tank until the level reaches the upper edge. Connect bleeder on the supply tank. **Clamp the overflow hose (venting) with a hose clamp.** Switch on bleeding machine.

- A bottle must be used to catch the escaping brake fluid and therefore be able to check it for dirt and air bubbles as well as to determine the brake fluid consumption. Change volume for each wheel: approx. 250 cc. Bleed on both bleeder valves of each wheel.

- Also drain about 50 to 100 cc of brake fluid on the bleeder valve of the clutch slave cylinder.

- **Switch off and disconnect the bleeding machine.** Remove hose clamp on the overflow hose (venting).

Note

The rear underside trim panel must first be removed for the next step (booster circuit). If applicable for reasons of space, unscrew and also remove the engine splash guard. In addition, the battery should be in well charged condition.

- Connect System Tester 9288 in conjunction with connecting lead 9288/1 in the diagnostics socket in the passenger's footwell (underneath a cover). **Turn on ignition and tester. Select type of vehicle and PDAS system afterwards. Then go into the drive menu.**

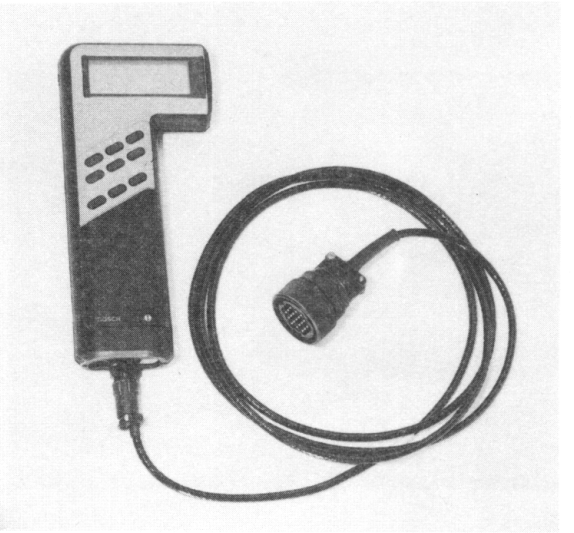

88/74

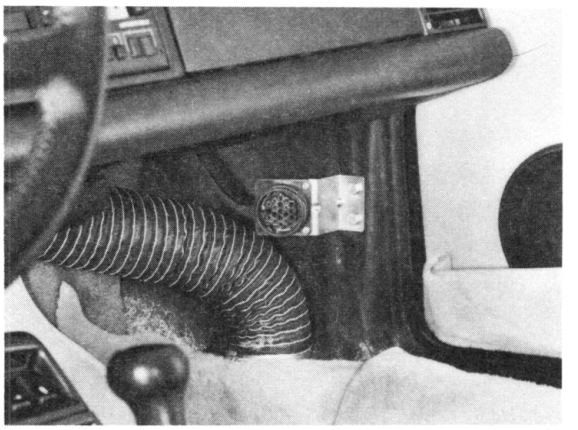

88/428

Printed in Germany – III,1989

- **Select the bleeding position in the drive menu**. Unscrew bleeder valve on the lateral lock cylinder and **drain about 250 to 300 cc (max. 300 cc) of brake fluid** after pressing the start key displayed in the tester.
  Press stop key and tighten the bleeder valve.
  Go into the pressure discharging position with the tester.

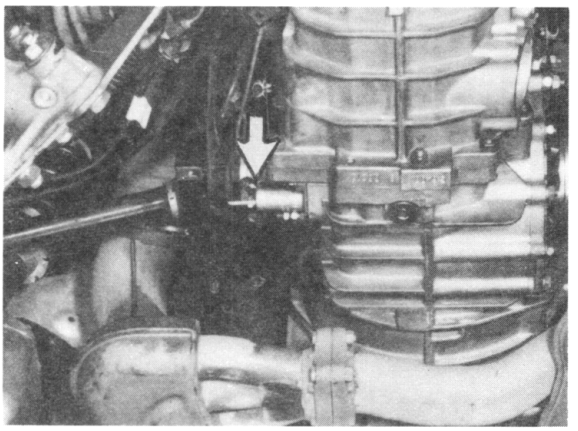

88/404

- **Pour in new brake fluid.** Operate the brake pedal several times while the ignition remains turned on.

- Afterwards activate the solenoids again with a 9288 System Tester (bleeding position in the drive menu) and **drain about 200 cc of brake fluid** on the bleeder valve of the **axial lock cylinder**.

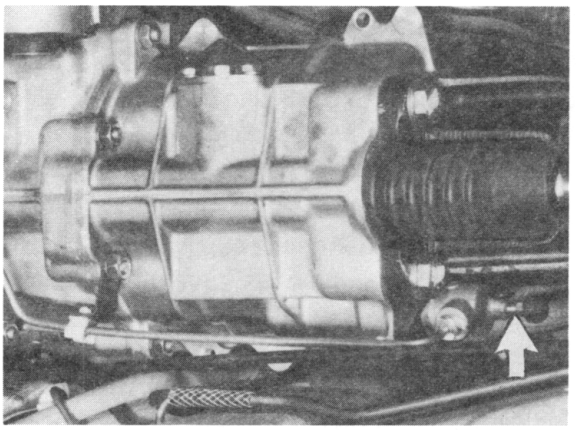

88/470

- Disconnect system tester.

- Correct the brake fluid level.
  This requires operating the brake pedal first so many times (with the ignition on) until the pump assembly is operated.
  Correct the brake fluid level only after the pump assembly has been switched off.
  Never pour in so much brake fluid that the level is above the "max." mark.

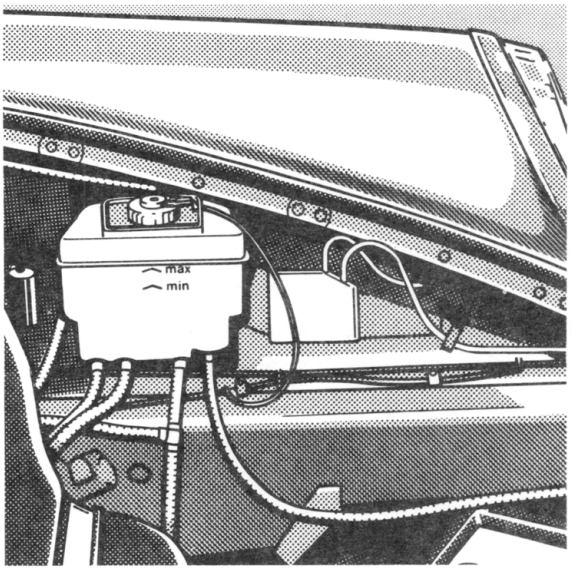

B58

Printed in Germany – III,1989

Further to 2: (Bleeding the lock cylinders and pressure lines)

Information

These instructions apply only if:

- the longitudinal or transverse lock cylinder has been replaced
- the hydraulic system was opened after the valve block (solenoid valves for longitudinal and transverse locks)
- it is suspected that the bleeding condition of the lock control (lock actuating) is not optimum.
  Explanation:
  Checking of the bleeding condition in the workshop is too time-consuming or not possible. For this reason, perform bleeding again if in doubt.

If the pump assembly, pressure accumulator or the valve block has been replaced or removed, these instructions are not sufficient. Other work must be performed previously.
Description as from Page 47-6.

The underbody cladding must be dismantled at the rear for the following steps.
For space reasons, undo or also dismantle the assembly under-protection if necessary.
In addition, the battery should be in well-charged condition.

Bleeding

- Fill the fluid reservoir with new brake fluid up to the top edge.
- Connect the system tester 9288 to the diagnosis socket (right in the passenger footwell) with the connecting cable 9288/1.
- **Switch on ignition and tester. Select vehicle type and then the system PDAS. Go into the drive link menu.**
- **Select the item "Bleeding" in the drive link menu.** Open the bleeder valve on the transverse lock cylinder and remove brake fluid after pressing the start key indicated by the tester.
  Continue bleeding until brake fluid free of air bubbles emerges (max. 300 cm^3).
  Press the stop key and close the bleeder valve.
  Change to pressure reduction position with the tester.
- **Fill with the new brake fluid (depending on quantity removed).**
- Then operate the solenoid valve again with the system tester 9288 (in the drive link menu / item "Bleeding") and **also remove brake fluid at the bleeder valve of the longitudinal lock cylinder until the fluid is free of air bubbles (remove max. 300 cm^3).**
- Disconnect the system tester and correct the brake fluid level (refer to Page 47-4). **Do not fill over the "max. marking" under any circumstances.**

Printed in Germany – V, 1989

Further 3: (Bleeding the lock or brake booster circuit)

Information

Bleeding is divided into three steps. The first step can be omitted where appropriate.

1st step: Preparatory measures for first assembly or re-installation

2nd step: Bleeding the pressure accumulator and the valve block

3rd step: Bleeding the lock cylinders and pressure lines (as on Page 47 - 5)

In the case of replacement or removal of the pump assembly, pressure accumulator and valve block, these instructions (procedures) must be observed exactly. If a different procedure is followed, heavy foaming of the brake fluid may occur.

When working on the booster circuit (for removal and installation of corresponding parts), first depressurize this circuit.
To do this, disconnect the electrical plug on the pressure pump (pump assembly) (refer to drawing 348-47) and then operate the brake pedal approx. 25 times.
To remove and plug in the electrical plug, press in the center on the plug locking clip.

Preparatory measures for
first assembly or reinstallation

This work step (1st step) is required only in the event of replacement or re-installation of the pump assembly, pressure accumulator and valve block. In addition, it is also necessary if the suction line has been opened or if the fluid reservoir was previously empty. Otherwise, start with the 2nd step. (Bleeding the pressure accumulator and the valve block).

- Ensure that the electrical plug at the pressure pump (pump assembly) has been disconnected.

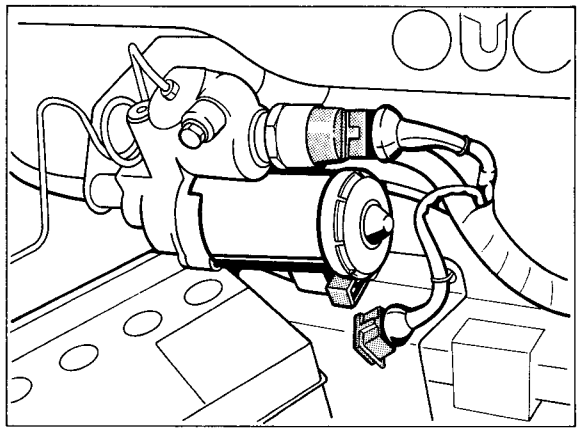

348-47

- Immediately after assembly of the parts, fill the fluid reservoir with new brake fluid up to the top edge. Connect the bleeding device to the fluid reservoir.
  Clamp off the overflow hose (ventilation) with a hose clamp.
  Switch on the bleeding device. Bleeding pressure approx. 1.5 bar.

Note

The brake pedal must not be operated as long as the bleeding device is connected, otherwise the return line may be forced out of the rubber plug of the brake booster.

Continue with bleeding the pressure accumulator and valve block.

Bleeding the pressure accumulator and valve block (step 2)

If step 1 was not performed, discharge any accumulator pressure. To do this, disconnect the electrical plug at the pressure pump (pump assembly) and **slowly open** the bleeder valve at the pressure accumulator with connected collection bottle.
Hold the bleeding hose firmly.

Caution:

A pressure of up to 180 bar exists at the bleeder nipple of the solenoid valve and also at that of the pressure accumulator. Open the bleeder valve only very carefully. Ensure that the bleeder hose is securely fitted!
Wear protective goggles and protective gloves.

If not already done (if the system was already depressurized), **connect the collection bottle to the pressure accumulator bleeder valve and open the valve.**

Move the steering/ignition-starter lock to position 1 (necessary for pump operation). Plug the electrical plug onto the pump. As soon as no air bubbles are visible any more at the transparent bleeder line of the collection bottle, disconnect the electrical plug and close the bleeder valve.

Note

Insofar as the filling and bleeding device is not connected (is required only for step 1), always check the fluid level in the fluid reservoir between the bleeding operations and top up with new brake fluid if necessary.

Open the bleeder valve at the valve block. Plug the electrical plug onto the pump. Disconnect the electrical plug and close the bleeder valve as soon as the brake fluid emerges without air bubbles.

Now completely fill the pressure accumulator (bleeder valves closed). For this purpose, connect the electrical plug. As soon as the pump has audibly switched off, **disconnect the electrical plug** and completely discharge the pressure at the bleeder valve of the pressure accumulator. Slowly open the bleeder valve and hold the bleeder hose tightly.
Caution: A pressure of up to 180 bar is present.
Wear protective goggles and protective gloves.

Repeat the last operation (completely fill the pressure accumulator and then completely drain the accumulator pressure) approx.. 1-2 times (brake fluid must be free of air bubbles).

Printed in Germany – X, 1990

- **Also bleed the valve block in the same way (as for the pressure accumulator) approx. 1-2 times.**

- When it is guaranteed that bleeding has been performed so that there are no longer any air bubbles, securely tighten the bleeder valves and plug the electrical plug onto the pump.
  Ensure that the plug engages properly.

- **Switch off the bleeding device if appropriate and disconnect. Also remove the hose clamp from the overflow hose (ventilation).**

- Press the brake pedal several times. (The bleeding device must not be connected.)

- Continue with bleeding the lock cylinders and pressure lines.

Bleeding the lock cylinders and pressure lines (step 3)

In the following work step, the solenoid valves are operated with the system tester 9288. The high pressure present at the solenoid valves is thus supplied in pulse form into the pressure lines and to the lock cylinders via the check valves.
Remove brake fluid at the bleeder valves of the lock cylinders until no air bubbles appear anymore. (Top up fluid reservoir in between if necessary).

The exact work sequence is described on Page 47-5.

Printed in Germany – X, 1990

Pressure tests on the booster circuit

Overview

1. General

2. Pressure gauge connection

3. Tests

4. Nominal values / Notes

1. General

The following points can be checked by means of the pressure test on the booster circuit (brake booster and block control):

- Freedom from leaks of the booster circuit (any internal leak can thus be localized)

- Gas filling pressure of the pressure accumulator

- Switching points for the booster circuit (brake pressure warning lamp and operating pressure). This is controlled by the pressure warning switch of the pump assembly.

2. Pressure gauge connection

- Depressurize the booster circuit. To do this, disconnect the electrical plug at the pressure pump (pump assembly) and then press the brake pedal approx. 25 times. The system is depressurized as soon as the brake pedal feels hard when operated. In order to disconnect and plug the electrical plug onto the pressure pump, press in the center on the plug locking clip.

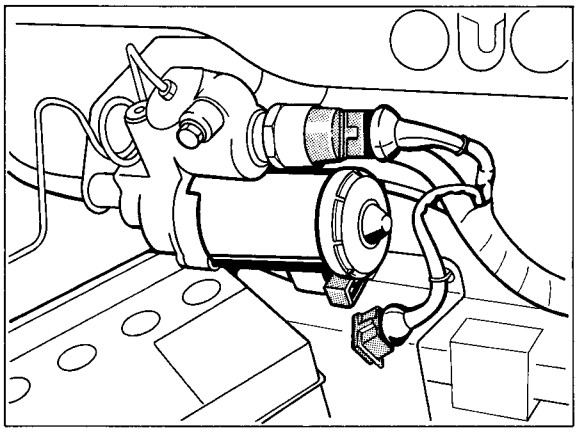

348-47

- Connect pressure gauge 9509 (No.1) at the screw coupling (mini measuring connection No. 3) of the pressure accumulator with the high-pressure measuring line 9509/2 (No.2).

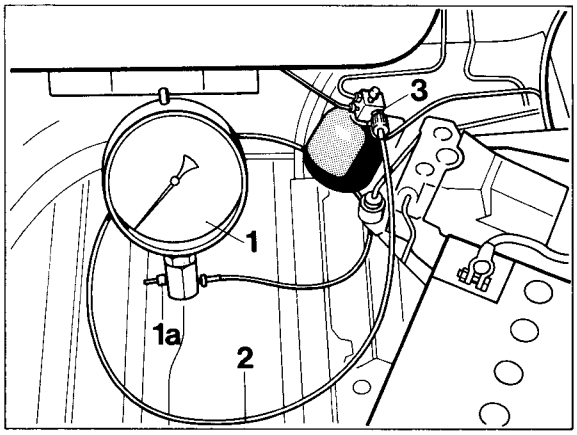

371-47

Printed in Germany – V, 1989

- **In the case of pressure accumulators without mini measuring connection,** connect the high-pressure measuring line 9509/1 (No.2) with adapter M 8 (No. 3) at the pressure accumulator instead of the bleeder valve.
  To do this, undo the pressure accumulator slightly if necessary. The adapter M 8 (No. 3) must be taken from the pressure testing device for braking-force regulator testing.

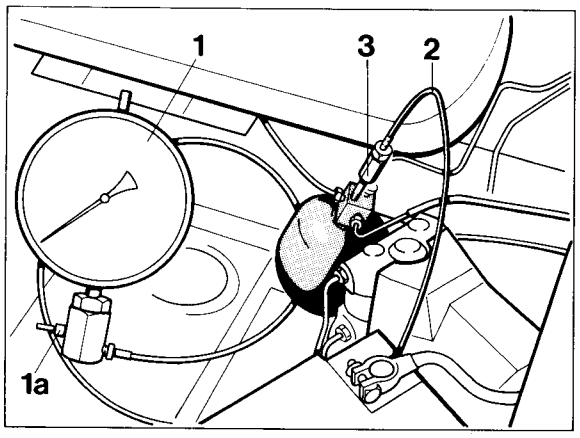

372-47

– **Bleed the pressure gauge (No. 1).** To do this, connect a collection bottle to the pressure gauge bleeder valve (No. 1a) and open the valve.
  Move the ignition key to position 1 (necessary for pump operation).
  Plug the electrical plug onto the pump. **Disconnect the electrical plug and close the bleeder valve** as soon as no air bubbles are visible anymore at the transparent bleeder line of the collection bottle.

– Notes on removal of the pressure gauge after the tests on Page 47 - 11.

3. Tests

Note

Operation of the pump is regulated by means of the ignition key for testing purposes.

Position 0 = Pump off
Position 1 = Pump on until switched off by the pressure warning switch.

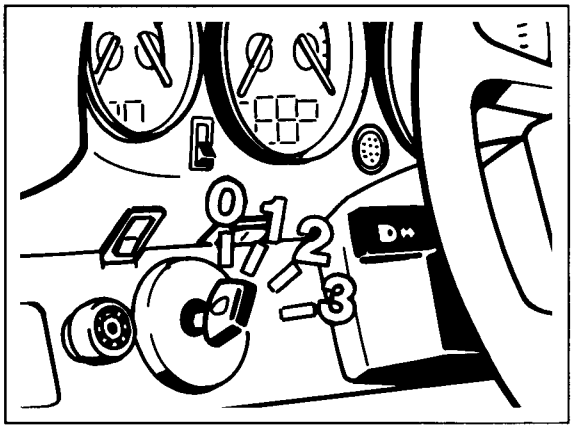

47-10

– In ignition key position 0, plug the electrical plug onto the pump. Locate the pressure gauge in a position where it can be seen.

– For the tests, it is expedient to observe the following sequence:

a. Pressure accumulator - Gas filling pressure

b. Switching points for the brake pressure warning lamp

c. Cut-in and cut-out points of the pump

d. Leak test

– Turn the ignition key to position 1 (pump starts up).

Printed in Germany – V, 1989

a. Gas filling pressure of the pressure accumulator.

Turn the ignition key to position 0 at approx. 100 bar.

Press the brake pedal several times and observe the pressure gauge. The pressure accumulator gas filling pressure has been reached at the instant when the pointer of the pressure gauge abruptly falls to 0 bar. Refer to Page 47-12 for nominal values.

Note

Sensitively operate the brake pedal shortly before the gas filling pressure is reached.

b. Checking the switching points for the brake pressure warning lamp.

Pressure build-up:

Start the engine and observe the warning lamp. Immediately turn the ignition key to 0 position at the instant when the warning lamp goes out. Read off the pressure on the pressure gauge.

Pressure reduction:

Produce a system pressure of approx. 140 bar. Disconnect the plug at the pressure pump.
Start the engine
Operate the brake pedal sensitively several times until the warning lamp lights up. Read off the pressure on the pressure gauge. Refer to Page 47 - 12 for nominal values.

c. Checking the switching points of the pressure pump

Cut-out pressure: Turn the ignition key to position 1. The electrical plug must be plugged onto the pressure pump for this. Read off the pressure on the pressure gauge **immediately** after independent pump cut-out.

Cut-in pressure: Turn ignition key to position 1. Wait until the pump switches off independently if appropriate. Press the brake pedal as often as required until the pump starts up. Read off the pressure on the pressure gauge at this instant.
Refer to Page 47-12 for nominal values.

d. Checking the pressure loss of the booster circuit.
Turn the ignition key to position 1. Wait until the pump cuts out independently. Press the brake pedal as often as required until the pump starts up again. After independent cut-out of the pump, turn the ignition key to position 0 and disconnect the electrical plug at the pump. No longer operate the brake pedal. Measure the pressure drop over the course of time. Refer to Page 47 - 12 for permitted values.

Notes

Depressurize the booster circuit before removing the pressure gauge.

On pressure accumulators without mini-measuring connection, bleed the pressure accumulator after removing the pressure gauge. Follow the same procedure here as for bleeding the pressure gauge, Page 47 - 10.

Printed in Germany – V, 1989

4. Nominal values / Notes

Nominal values		Notes
Pressure accumulator - Gas filling pressure		Replace pressure accumulator if the gas filling pressure has reached or fallen below the wear limit.
new	80 ± 5 bar	
Wear limit	30 bar	
Switching points of the pressure warning switch		If the actual values deviate from the nominal values, replace the pressure warning switch
Brake pressure warning lamp warning point		
for pressure build-up	up to approx. 115 bar max. up to 133 bar	
for presssure reduction	as from 105 + 2/–5 bar	
Cut-out point of the pump		Read off the pressure immediately after independent cut-out of the pump
at the latest	at approx. 180 bar	
at the earliest	at approx. 160 bar	
Cut-in point of the pump (after pressure reduction)	140 + 5 / – 6 bar	
Freedom from leaks of the booster circuit		Fill the pressure accumulator completely 2 x previously (start the pump running again after 1st cut-out by operating the brake pedal). Then turn the ignition key to position 0 and disconnect the electrical plug at the pump. No longer operate the brake pedal now.
Pressure drop, starting from the cut-out point of the pump (precondition: nominal value is achieved)		External leak: Retighten lines or replace the corresponding parts.
not below 140 bar in 30 minutes		Possible internal leaks:
not below 100 bar in 3 hours		– Brake booster – Valve block for lock control – Pump assembly First check the brake booster. To do this, dismantle the line at the pressure accumulator (in depressurized condition). Close off the pressure accumulator with a mini-measuring connection or suitable bleeder valve. Repeat the test. If appropriate, continue in the same way at the valve block. Then replace the localized/damaged parts and bleed the system.
		Caution: Wear protective goggles and protective gloves when decreasing the pressure via the bleeder valve.

Printed in Germany – V, 1989

Removing and installing pressure warning switch

Tools

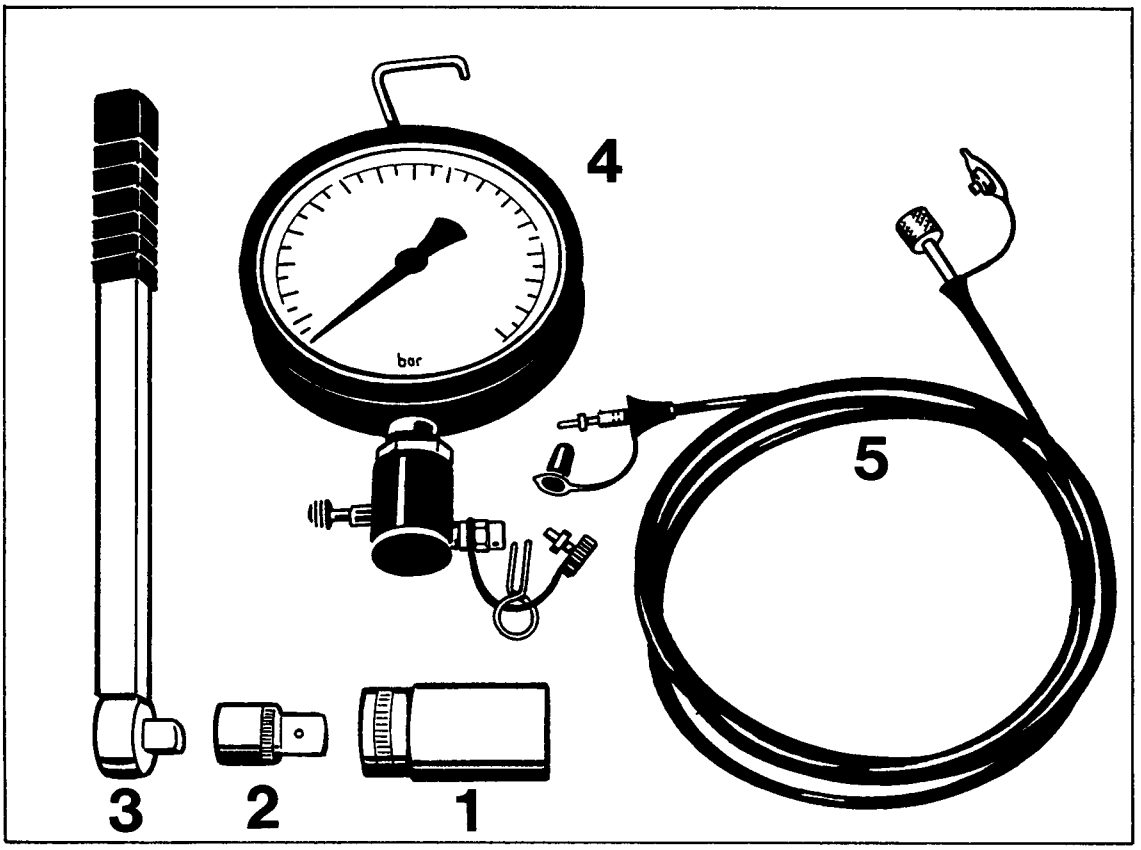

No.	Designation	Special tool	Order number	Explanation
1	Socket wrench insert	9524	000.721.952.40	
2	Reducing adapter from 3/4" to 1/2" or 3/8" according to torque wrench used	–	–	available from automotive trade suppliers; to connect torque wrench with socket wrench insert
3	Self-releasing torque wrench covering torque range between 20 (15) and 30 Nm (22 ftlb)	–	–	available from automotive trade suppliers; Tightening torque for pressure warning switch 26 Nm (19 ftlb)

Printed in Germany – X, 1990

Tools

No.	Designation	Special tool	Order number	Explanation
4	Pressure gage	9509	000.721.950.90	For checking leakage and switching point (booster circuit pressure tests) together with measuring line 9509/2 (No. 5) or measuring line 9509/1 (-) on earlier cars without miniature measuring union on pressure reservoir
5	High press. measuring line	9509/2	000.721.950.92	on cars with miniature measuring union on pressure reservoir
–	High press. measuring line	9509/1	000.721.950.91	on cars without miniature measuring union on pressure reservoir, use an M 8 adapter as well (Page 47 - 10).

Printed in Germany – X, 1990

Removing and installing pressure warning switch

Removing

1. With the ignition switch in position 0, pull off both plugs at the pump assembly.

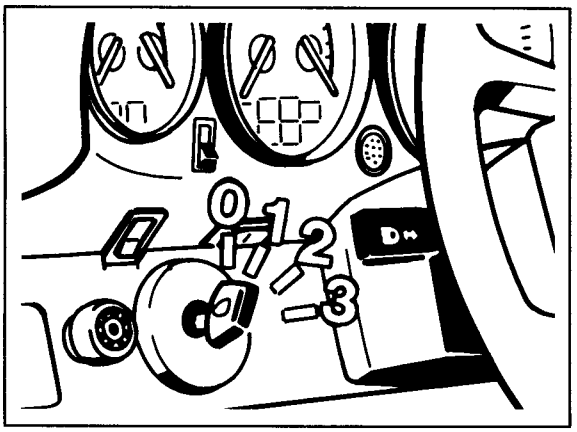

47-10

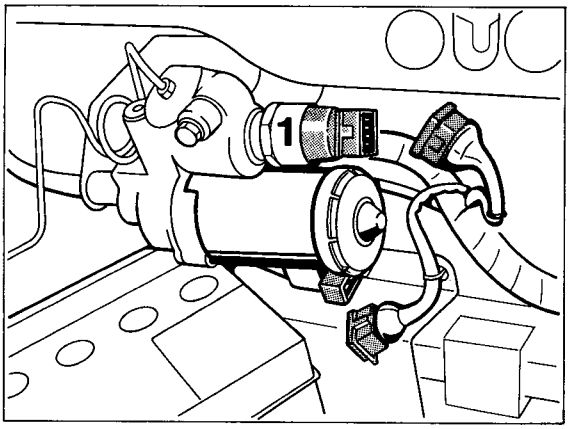

607-47

2. Evacuate all pressure from the system by pressing the brake pedal down about 25 times. The system is at zero pressure when the brake pedal feels hard as it is pressed.

3. Remove press. warning switch (No. 1 /Drawing 607-47) with special tool 9524. Prevent the pump assembly from turning while loosening the switch.
   Warning: first clean the area round the pressure warning switch and cover it with non-fluffy cleaning cloths to trap the small amount of residual brake fluid which emerges.

Installing

1. Screw in the pressure warning switch and tighten to a torque of 26 Nm (19 ftlb). Renew the O-ring if necessary. Prevent the pump assembly from turning while tightening.

Note

Wet the sealing ring with brake fluid only. Never use brake cylinder paste. Absolute cleanliness is essential. Use only non-fluffy cleaning cloths.

2. If there is an electrical fault at the pressure warning switch, always exchange the pump relay (R 51 / arrow) as well.

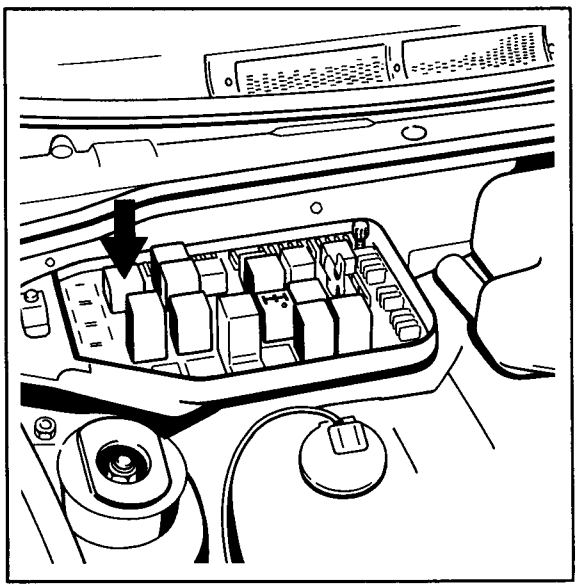

47-15

3. Attach plug to pressure warning switch (arrow).

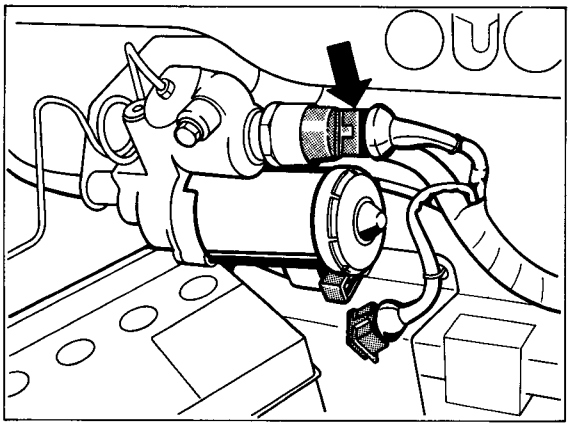

348A-47

4. Partly bleed the booster circuit as follows:
Open the bleed valve at the pressure reservoir. Attach the electrical plug to the pump. As soon as brake fluid emerges free from air bubbles, pull off the electrical plug and close the bleed valve.
Next, charge the pressure reservoir completely. To do this, attach the electrical plug. As soon as the pump is heard to switch off, **pull off the electrical plug** and relieve the pressure completely at the pressure reservoir bleed valve. Slowly open the bleed valve and hold the bleed hose firmly.
Warning: a pressure of up to 180 bar is present at the valve.
Wear protective goggles and gloves.

5. Connect pressure gauge SW 9509 to the pressure reservoir and check the switching points of the pressure warning switch and also for leakage in the booster circuit.
The precise working proced. and desired values are stated on Page 47 - 9...47 - 12 (Pressure tests on booster circuit).

Notes

If necessary, top up the brake fluid level at intervals so that the fluid reservoir is not drained completely. The booster circuit must be at zero pressure when connecting and removing the pressure gage.

6. After testing and assembly work has been completed, correct the brake fluid level (Page 47 - 4).

Tightening torques for steering

Location	Thread	Tightening torque Nm (ft.lb.)
Steering gear to cross member	M 8	45 (33)*
Tie rod (balljoint) to steering arm	M 12	65 (48)
Universal joint to steering gear and steering shaft	M 8	23(17)***
Tie rod to balljoint and joint fork (counter nut)	M 14	45 (33)
Tie rod to rack	M 14	70 (51.5)
Steering wheel to steering shaft	M 16	45 (33)
Protective tube to chassis**	M 6	10 (7.5)
Pressure line and return line to steering gear	M 12	20 (15)
Pressure line to servo pump	M 14	30 (22)
Pressure line to pressure line (union nut)	M 14	25 (18.5)

* Replace screws each time they are removed. Only use original spare parts (microencapsulated screws). Threads in cross members, screw theads and washers must be clean and free of grease. Always fit the screws evenly until the fastening clamps are level with the cross member before tightening the screws.

** Break off M 6 and M 8 breakaway screws after carrying out a functional and visual inspection of all relevant components.

*** **Replace setscrews and locknuts each time they are removed.** Tightening torque also applies to cars with airbag (steering wheel with sliding section and universal joint at steering box).

Printed in Germany – X, 1990

Replacing the steering in case of accident damage

A. General

Accidents or **driving conditions similar to accidents** may cause various types of damage to steering gears. **If the outside of the steering gear is undamaged,** tracing of damage is sometimes difficult and requires considerable effort. This, however, constitutes an incalculable risk for the safety of the vehicle as it may lead to steering failure.

Due to the fact that a comprehensive check of all steering gear components requires considerable effort and is therefore not normally justifiable or even impossible to be carried out with standard shop equipment, the condition of other components that are easier to be checked must be considered as a **replacement solution.**

The following guidelines (item B) should be observed to decide if the steering gear of an accident vehicle requires replacement or may be used as it is.

B. Assessing the Condition of the Steering System of an Accident Vehicle

The steering gear **may** remain on the car **if all the following conditions** are met:

– No visible damage to front-axle components such as wheels, spring struts, wheel carriers, control arms, steering arms, tie rods, on front-axle crossmembers, on front-axle side members steering shaft as well as body mounts of suspension components.

– No inadmissible increase of torque and no binding or sticking when the steering gear is turned from lock to lock. When turning the steering gear, the front wheels must be off the ground (front axle raised). In addition, the engine must be switched off (power steering pump without drive).

– Admissible tolerances of suspension alignment must not be exceeded.

The steering box **must be replaced or exchanged if any of the following points apply:**

- **Damage to steering gear is visible or can be felt**
- **Burning damage (e.g. bellows of steering burnt)**

Printed in Germany – XXI, 1994

- **Permanent deformation or cracking of:**

  Steering gear mounts

  Tie rods

  Steering arms

  Spring struts (except for 928)

  Wheel carriers

  Control arms

  Front-axle side members

  Front-axle crossmember

If the above criteria are **not** sufficient for a decision, it is recommended to exchange or replace the steering gear.

C. Exceptional regulations / order processing

If the **steering gear replacement proposed** by the shop is refused by the customer or insurance company for financial reasons, an expert or, if this is not possible in foreign contries, the importer should be consulted (to be charged to the refusing party). If a decision is made against the above guidelines, it is recommended to file a note to this effect and have it signed by the expert.

Power steering gears with no visible outside damage that require replacement can be supplied on an exchange basis.

Printed in Germany – XXI, 1994

Inspection and installation work on the rack and pinion power steering

General

Damage to the power steering is caused by a lack of oil in the hydraulic system. Even small leaks can lead to loss of fluid owing to the high oil pressure in the hydraulic circuit, thus resulting in damage to the power-steering pump.

Grunting noises when the steering is locked or foam production in the supply reservoir indicate insufficient oil and/or sucked-in air. However, before the supply reservoir is topped up, any leaks on the suction side must be remedied or the damaged part replaced on the pressure side.

Important note

Rack gear and power pump must not be repaired or dismantled.
The power pump and (for certain versions) the steering gear are available as exchange unit. Refer to our exchange parts catalog.

Power steering pump toothed belt

The toothed belt pretension is not adjustable

Checking the steering system for leaks (visual inspection)

Turn the steering wheel to stop position and hold tight with the engine idling. This builds up the maximum possible line pressure.

In this position, check all line connections for leaks and retighten if necessary.

Perform the test for max. 10 s. If the test takes
longer than this, always pause briefly after approx. 10 s.

Checking the fluid level of the power steering

The supply reservoir with transparent top section is installed on the right in the engine compartment. Check the ATfluid level **(ATF-Dexron II D)** with the engine idling and without steering operation. The correct level is between the min. and max. markings on the reservoir.

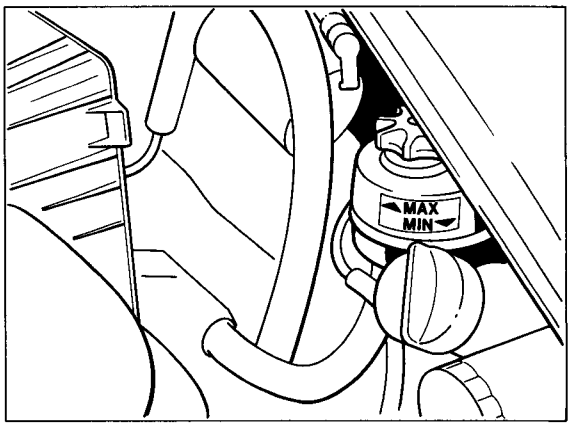

Printed in Germany – XV, 1992

Bleeding the steering system

1. **In order to fill the whole system after installation of new steering assemblies, lines or heavy hydraulic fluid loss, start the engine briefly several times and immediately switch it off again after it has started. During this operation, the fluid level in the supply reservoir falls rapidly. Consequently, the level must constantly be topped up with ATF Dexron II D. The supply reservoir must not be sucked empty.**

2. If the fluid level in the supply reservoir no longer drops when the engine is cranked briefly, start the engine and allow it to run at idling speed.

3. Turn the steering wheel rapidly from one lock to the other several times so that the air can escape from the cylinders. In the limit positions of the piston, do not pull on the steering wheel more than is necessary to turn the steering (unnecessary pressure build-up is initially avoided).

4. Observe the fluid level during this operation. If this still falls, top up until the fluid level remains constant in the fluid reservoir and until no air bubbles rise up in the supply reservoir when the steering wheel is turned:

Note

The oil level in the supply reservoir must not rise more than 10 mm when the engine is switched off.
If the fluid levels deviate from each other by more than 10 mm when the engine is stationary and running, there is still too much air enclosed in the hydraulic fluid.

5. With the engine running at idling speed, produce the correct fluid level (between the min. and max. markings) without operating the steering system.

Printed in Germany – V, 1989

Assembling the track rods on the steering gear

Note

The link fork of the track rod must possess a certain installation position. The track rods are assembled with built-in steering gear. It must be ensured that the rack is not damaged (scores).

1. Screw the track rod into the rack until:

– the link fork (A) is horizontal (±2° deviation from the horizontal in the vehicle permitted).

– and so that the distance (B) between the stop disk and the link fork is approx. 4 - 5 mm. When measuring the distance, the stop disk must rest on the rack. The stop disk simultaneously acts as a locking nut.
Observe usage of stop washer (page 48 - 4).

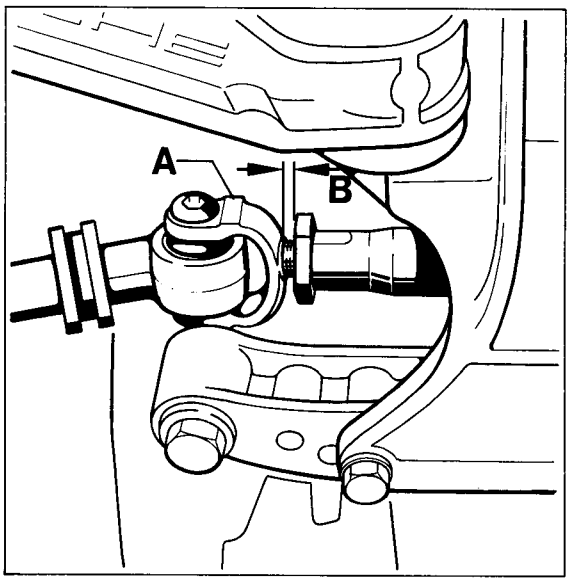

2. Secure the link fork on the rack in the described position. To do this, tighten the stop disk using the socket spanner insert, special tool 9183.
Tightening torque 70 Nm. **During tightening, hold against tightening force at rack (partially possible only on the left side) and also extend the rack out of the steering gear casing only as far as necessary.**

3. Ensure that approximately the same number of thread turns are screwed into the (X) track rod of the link fork and ball joint. Before fitting the bellows, coat the fully extended end(s) of the steering rack with VW steering gear grease AOF 063 000 04.

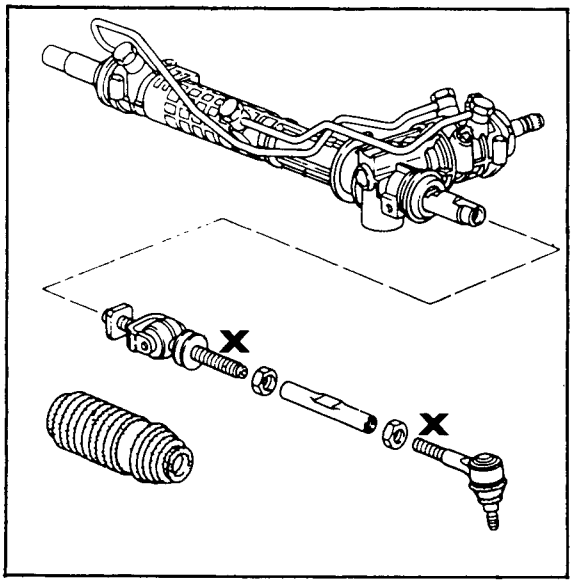

48 - 3

Printed in Germany – XV, 1992

Steering stop limiter

Note

The steering box travel is limited by stop washers. 2 versions are used.

Version 1 = Stop washer ≈6.0 mm thick.
Part No. 964 347 325 00.

Version 2 = Stop washer ≈10 mm thick.
Part No. 964 347 325 02.
Steering rack stroke is smaller than with version 1.

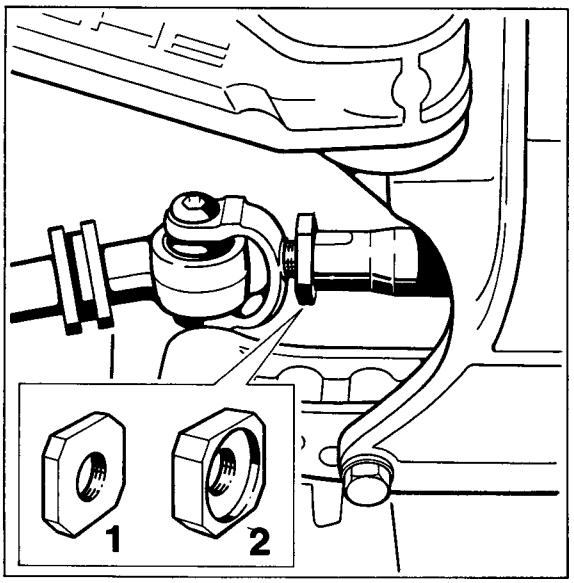

1111-48

Usage

Version 2 (10 mm thick):

- 911 Carrera RS general.
- 911 Carrera 2/4 with 17-inch wheels. Also for 7 J x 16 front wheels.
- For Carrera 2/4 **as of the following VIN (during Model Year 1992):**
  WPO ZZZ 96 Z NS 40 0552 (Coupé RoW)
  WPO AB2 96 8 NS 42 0280 (Coupé USA)
  WPO ZZZ 96 Z NS 43 0124 (Targa RoW)
  WPO BB2 96 6 NS 44 0113 (Targa USA)
  WPO ZZZ 96 Z NS 45 0227 (Conv. RoW)
  WPO CB2 96 5 NS 46 0289 (Conv. USA)

  This allows 16 and 17 inch wheels to be fitted to the Carrera 2/4 without having to perform additional service work on the steering stop.

Version 1 (6 mm dick):

- 911 Turbo 91 → and 911 Turbo Look.
- 911 Carrera 2/4 with 6 J x 16 front wheels, up to the above modifications applied during Model Year 1992.

Removing and installing steering gear

Removal

1. Separate universal joint (steering shaft) from steering gear. To do so, remove floorboard of pedal cluster. Undo both clamping screws and push joint upwards.

Note

On **airbag vehicles**, the steering wheel must be located with the road wheels in straight-ahead position. If this requirement is not observed, the airbag contact unit must brought into the **center position after** the steering gear has been fitted (p. 48 - 8).
Airbag vehicles are fitted with a sliding joint. This way only one clamping screw (dowel screw) is provided.

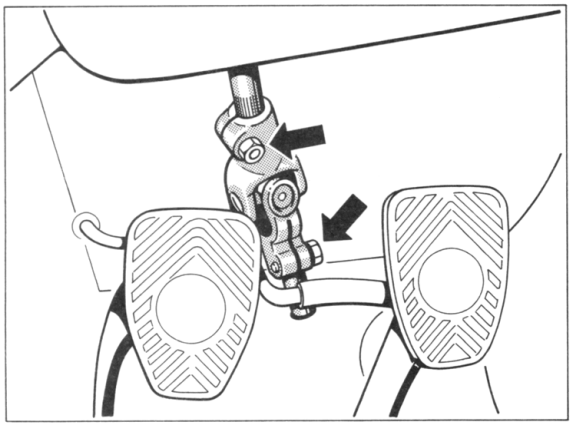

2. Remove underside panel.

3. Press tie-rod ball joint off the steering arm. Use a suitable puller, e.g. Nexus 168-1. Start by loosening the inner lock nut of the tie-rod adjuster. Turn tie-rod along with ball joint to the rear (arrow). Extend ball joint. Repeat procedure on the other side.

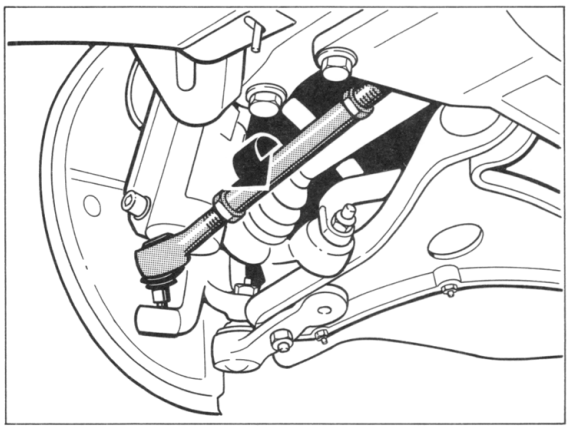

859-40

4. Remove right and left-hand tie-rod after the lock nut / stop washer (arrow) has been undone.

Note

Make sure the steering rack is not damaged (score marks). This is also important when removing and installing the steering gear. Use protective caps or a rubber or plastic hose for protection.

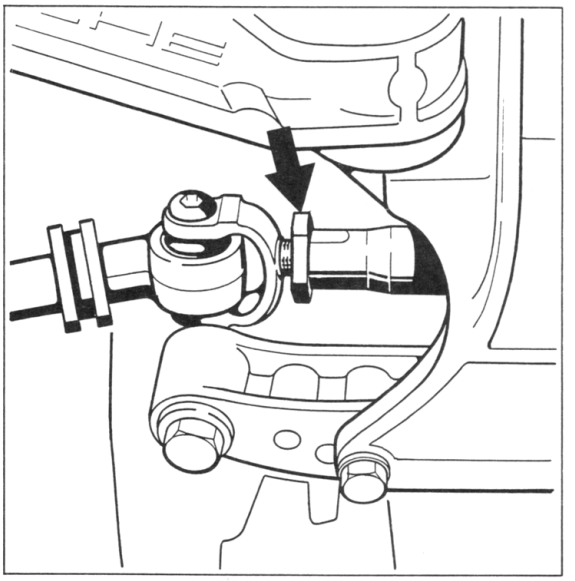

370/1-48

5. Undo feed and return lines of steering gear. Block lines or place receptacle below lines. If required, unclip power steering line from retainer.

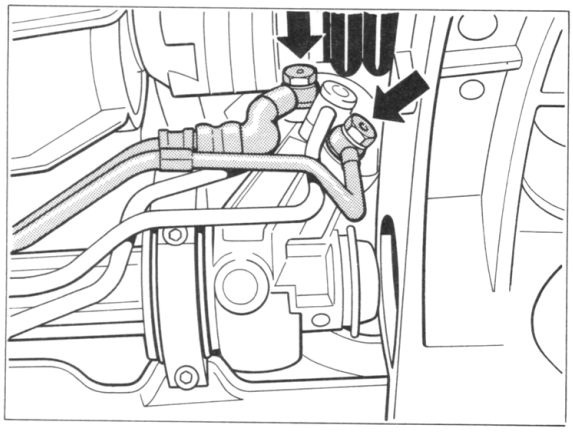

1089-48

6. Undo steering gear mounting bolts.

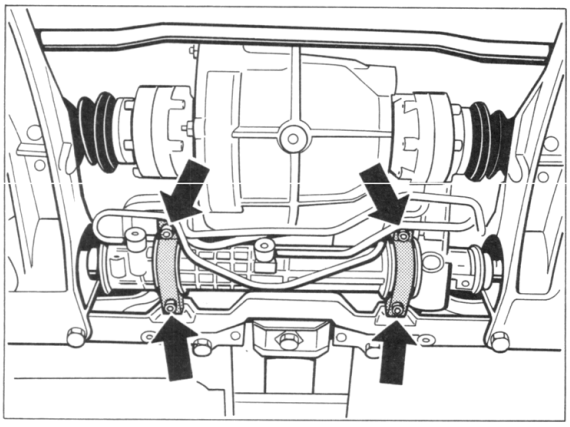

1090-48

7. Extend steering gear as follows: Rack on **right-hand** side is fully retracted into steering gear housing (arrow). Lower steering gear on **right-hand** side.

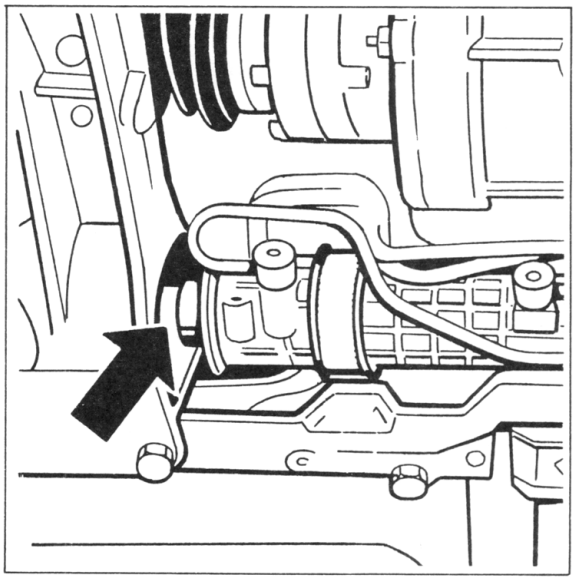

1091-48

Then retract steering rack on left-hand side fully into steering gear housing (arrow), pulling or pushing (as required) on face of steering rack (take care not to damage the steering rack). Extend steering gear in rotary piston / rotary valve area and take out towards bottom.

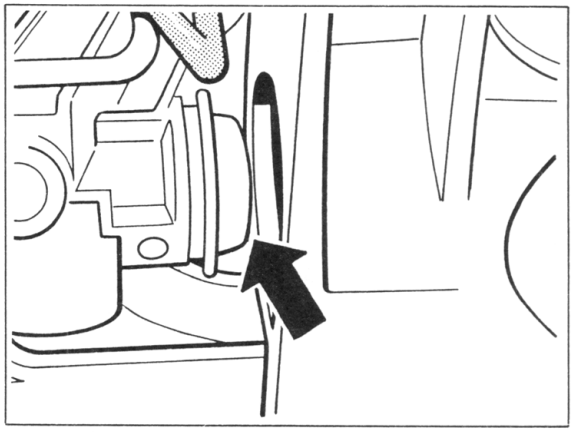

1092-48

Installation

Install in reverse order.
Be sure to observe the following points:

- **Replace steering gear mounting bolts and dowel screw(s) of the steering shaft with new parts after each removal operation.**
  Clean threaded bores for steering gear mounts with compressed air.

- **Make sure that the steering rack is not damaged (score marks).**

- With the rack fully extended, coat steering rack with VW steering gear grease AOF 063 000 04.

- When replacing the steering gear, assemble the rubber mounts and mounting clamps with Omnis 32 (Texaco) before fitting the gear into the vehicle.

- Push universal joint (steering shaft) into correct position — with steering wheel, steering box and contact unit (spiral spring) of airbag vehicles in center position.
  Steering gear fastening bolts should only be screwed on lightly (to facilitate assembly).
  Observe notes for airbag vehicles (p. 48 - 7 / 48 - 8).

- After having tightened the steering gear mounting screws, assemble the tie-rods with the steering gear, observing the correct position (page 48 - 3).

- After having reconnected the pressure lines, fill steering hydraulics and bleed the steering gear (page 48 - 2).

- Tighten all nuts and bolts to the specified torque.

- Check toe-in and adjust if required.

Notes for airbag vehicles

1. If slider No. 1 has been pulled of the steering shaft No. 4, the roll pin No. 2 must face the tooth cutout (No. 3) when the components are reassembled.

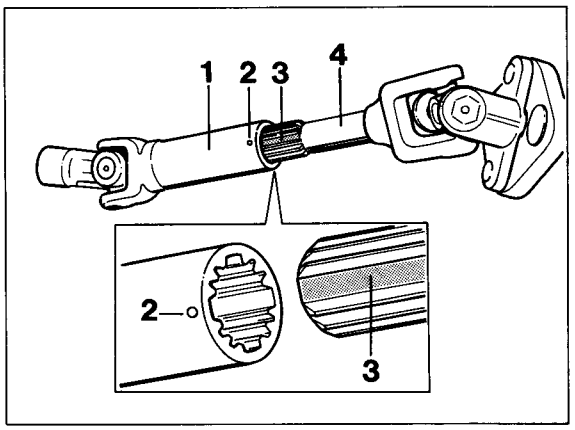

1396-48

Printed in Germany – XX, 1993

2. If the steering wheel has **not been located** before the steering gear was removed, the **correct position of the contact unit** (spiral spring) may have been lost.
   In this case, set the contact unit to the center position (approx. 4 1/2 turns from left-hand or right-hand full lock) with the front wheels in straight-ahead position (steering shaft fitted to steering gear). The precise center position is indicated by two arrows.

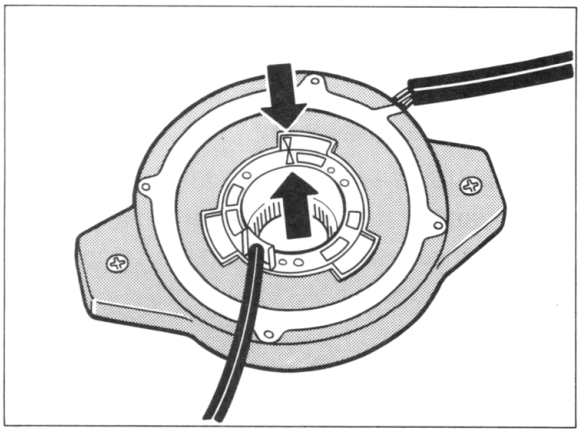

280-68

A new contact unit will be supplied locked in the center position. The lock is not removed until the contact unit is fitted.

Removing and installing steering/ignition lock

Removal

1. Disconnect battery.

2. Remove radio, heater control unit, left-hand air vent and knee guard.

3. Remove steering wheel. Observe safety precautions for vehicles fitted with airbag (Rep. Group 68). For removal and fitting of airbag steering wheel, refer to page 68 - 3.

4. On vehicles with keylock, remove bowden cable from ignition lock.
   Prior to removal, turn ignition key to pos. "II" (Ignition on).
   Then unscrew bowden cable from steering/ignition lock (arrow).

Note

The steering/ignition lock must at all times be set to position "II". If it is set to any other position, the steering/ignition lock and the keylock bowden cable will be damaged.

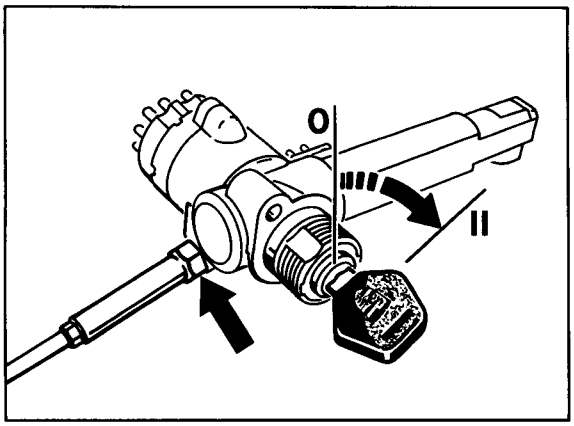

1068-37

5. Unscrew escutcheon. Drill out both 6 mm shear bolts and the 8 mm shear bolt that holds the steering/ignition lock to the steering outer tube.

Note

To drill out 8 mm shear bolt, proceed as follows:
Punch bolt off-center (steering wheel side) across cutout for steering shaft harness in bottom of instrument panel.

Pre-drill with a 4 mm dia. drill bit (min. length 120 mm) across the above aperture. Finish by drilling shear bolt from threaded bushing (pressed-in bushing) with 7-8 mm dia. drill bit (longer than 120 mm).

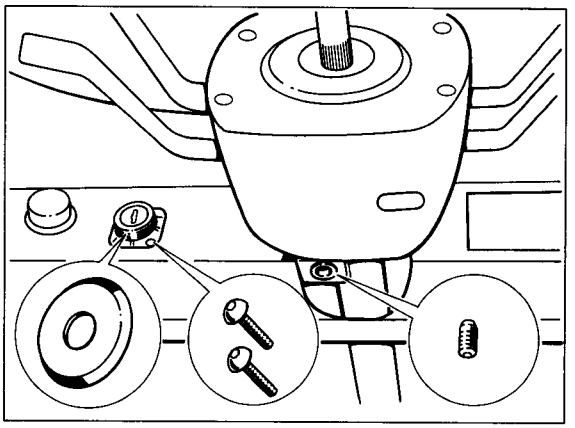

1095-48

6. Pull connector off ignition/starter switch and buzzer contact.
   Pull out steering/ignition lock.

Printed in Germany – XV, 1992

Replacing the threaded bushing

A damaged threaded bushing may be replaced as follows:

Push out threaded bushing with a suitable drift (A).

Pull in new threaded bushing with the aid of suitable washers and a corresponding spacer sleeve (B).

When pulling the bushing in, remember that the threaded bushing protrudes from the steering outer tube. (Inner dia. of washer is larger than outer dia. of bushing). Center washer correctly before pulling bushing in.

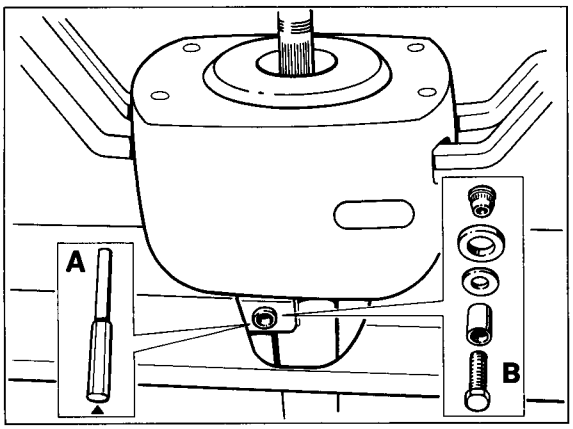

1096-48

Installation

1. Place steering/ignition lock into vehicle with lock pin disengaged (lock position "II").

2. Turn shear bolts into place but do not shear off yet. Fit steering wheel.

3. Fit connector of ignition/starter switch and buzzer contact.

4. On keylock vehicles, fit bowden cable with steering/ignition lock set to position "II". **Then** set selctor lever to "P" and turn ignition lock to "0" afterwards.

Note

If the steering/ignition lock cannot be turned to "0", the bowden cable must be readjusted (refer to Rep. Group 37).

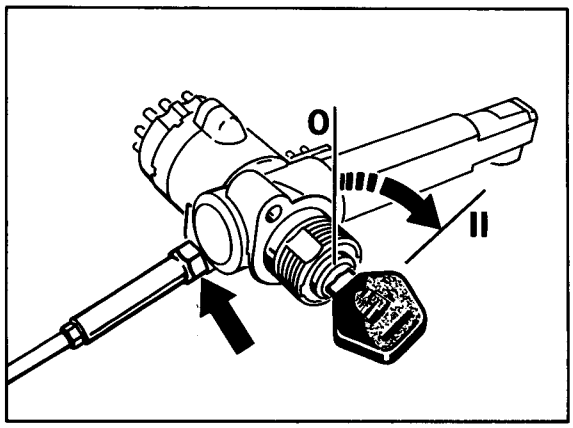

1068-37

5. Check operation of steering/ignition lock (operation of lock pin) and operation of keylock. Shear off bolts only if this check is o.k.

Checking hydraulic operation of steering system (pressure measurement)

Tools

Note

All parts (Nos. 1 to 6) may be used **as on the 944/928**. The pressure gauge is connected to the power pump (between power pump and pressure line) **as on the 944/968**.
Flange **No. 6 connects to the power pump.** Adapter No. 1 connects to the pressure line.
If the old **pressure gauge No. 3b** is used (see below), make sure the high-pressure hoses **No. 2b and No. 5 are connected to the pressure gauge in the correct positions.**
The high-pressure hoses, however, may be connected **in any position on pressure gauge No. 3a.**

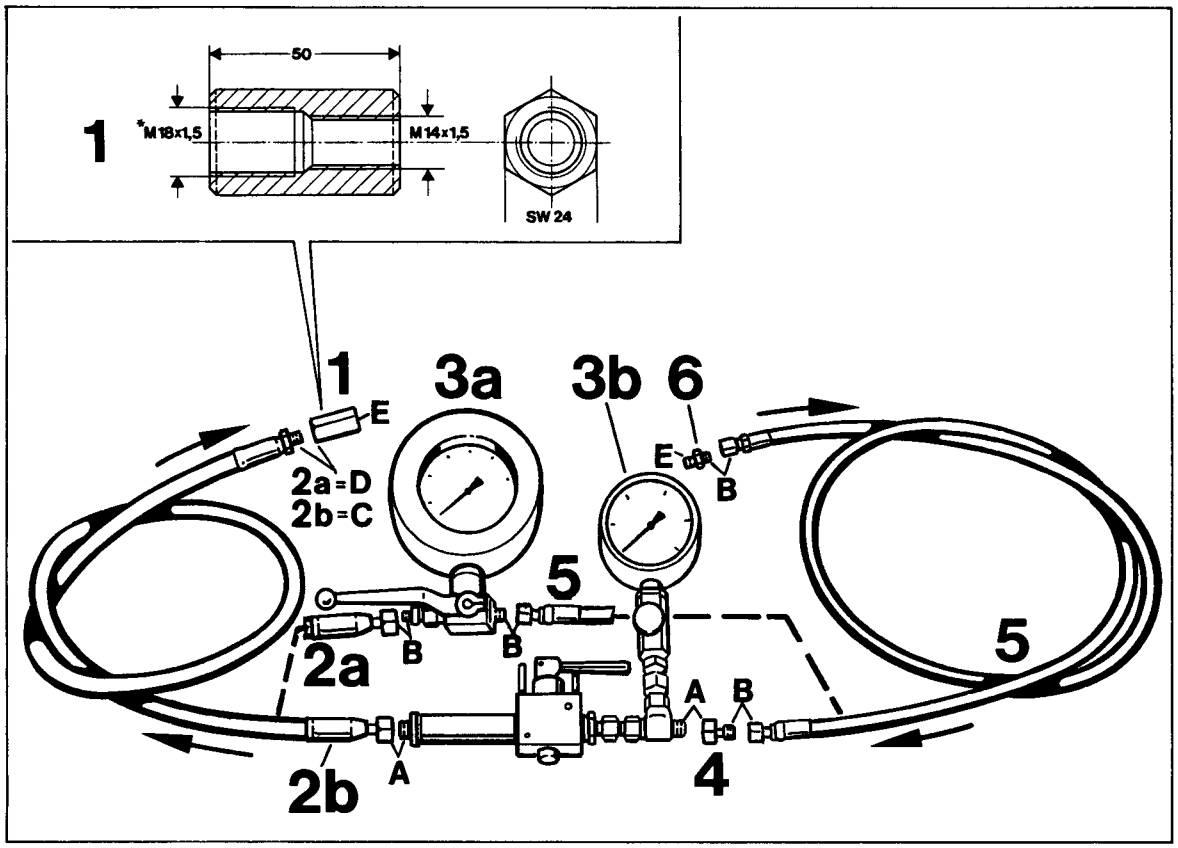

A = M18 x 1.5 with head seal
B = M16 x 1.5 with head seal
C = M18 x 1.5 flat sealing face with sealing ring
D = M16 x 1.5 flat sealing face with sealing ring
E = M14 x 1.5 flat sealing face with sealing ring

* Threads M 18 x 1.5 **or** M 16 x 1.5, depending on pressure gauge type (refer to tool list on page 48 - 12)

Printed in Germany – XX, 1993

No.	Designation	Special Tool	Order number	Explanation
1	Adapter (2 models / specific for gauge type)			**for pressure gauge 3 b:** Shop-made tool, refer to drawing (p. 48 - 11) **for pressure gauge 3 a:** Shop-made tool, differing from drawing. Threads are **not** M 18 x 1.5 (for pressure gauge 3b) **but M 16 x 1.5**
2a	High-pressure hose to 200 bar, 1.5 m long **for pressure gauge 3a**			commercially available, **M 16** x 1.5 with head seal on one end and **M 16** x 1.5 flat sealing face with sealing ring on the other end
2b	High-pressure hose to 200 bar, 1.5 m long **for pressure gauge 3b**			commercially available, **M 18** x 1.5 with head seal on one end and **M 18** x 1.5 flat sealing face with sealing ring on the other end
3a	Pressure gauge 0 - 160 bar	V.A.G.1402		Order No. Z 401 103 WE from Volkswagenwerk AG Wolfsburg KD-Gerätevertrieb VK35 Phone 05361 / 9-26479 , Fax 05361 / 9 - 21771
3b	Pressure gauge 0 - 250 bar, **old version no longer available**			
4	Reducer **(not required for pressure gauge 3a)**			commercially available, M 18 x 1.5 to M 16 x 1.5 with head seal

Printed in Germany – XX, 1993

No.	Designation	Special Tool	Order number	Explanation
5	High-pressure hose to 200 bar 2.0 m long			commercially available M 16 x 1.5 with head seal at both ends
6	Flange			commercially available, M 16 x 1.5 with head seal at one end and M 14 x 1.5 flat sealing face at the other end

Printed in Germany – XX, 1993

Checking hydraulic operation of steering system (pressure measurement)

General

The tester (pressure gauge) is connected between the power pump and the press. line. If the **old press. gauge is used**, pay attention to the correct **installation position**. For better understanding of the below descr., the conn. and lever positions have been identified.

Old version

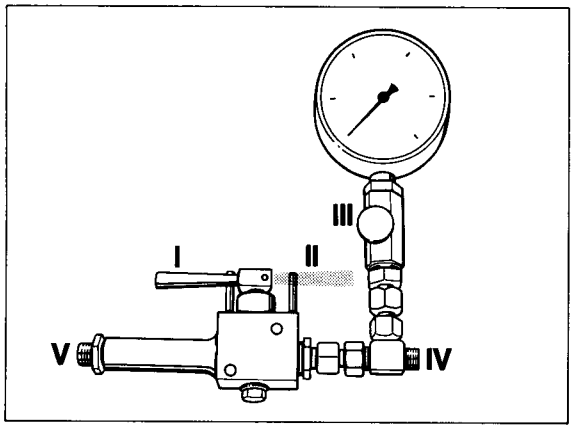

1394-48

V.A.G. 1402

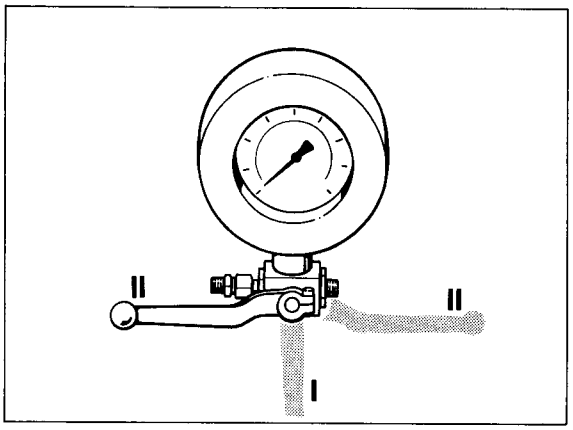

1395-48

I - Shutoff valve open
II - Shutoff valve closed
III - Damping orifice
IV - from power pump
V - to pressure line

Fitting the pressure gauge

1. Take off air cleaner cover complete with filter element.

2. Undo pressure line at power pump.
   Catch hydraulic fluid in a container (do not reuse).

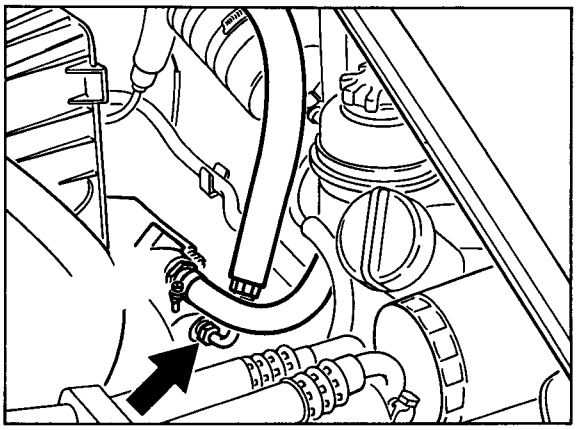

455A-48

3. Screw high-pressure hose No. 5 with flange No. 6 to power pump (required seal: 14 x 18).

4. Fit high-pressure hose **No. 2a or 2b** (1.5 m long) to pressure line, using the banjo bolt and adapter No. 1.
   Required seals: 2 x 14 x 18 and 1 x 18 x 22 or 1 x 16 x 20.

5. Install pressure gauge between high-pressure hoses and place on a support (e.g. tool box).
   A helper is required to read off the pressures.
   Make sure the hose section of the pressure line is not kinked. In addition, the tester hose must be kept at a safe distance from the belts and pulleys.

Note

Use reducer No. 4 for the older pressure gauge model **(No. 3b)** and fit high-pressure hose **No. 5** to **connection side IV of** pressure gauge.

6. Open shutoff valve at pressure gauge (lever position I), top up reservoir and bleed steering system (page 48 - 2).

Checking supply pressure of power pump

1. With the engine at idle, close shutoff valve (lever position II) and read off pressure.
   Specification: 100 to 110 bar. Open shutoff valve again immediately.

Note

To avoid wear, do not leave the shutoff valve closed for more than **5 seconds**. On **pressure gauge type 3a,** select lever position **"II right or II left",** depending on how the high-pressure hoses have been connected to the pressure gauge.
No reading is obtained if lever position II is incorrect.

2. If the specified value is not reached or if it is exceeded, the power pump must be replaced.

Checking system pressure

1. Run engine at idle. The shutoff valve must be open (lever position I).

2. Turn steering wheel to left-hand and right-hand full lock and read off fluid pressure on pressure gauge.
   Specification: 100 - 110 bar.
   Requirements: Supply pressure of power pump must be o.k.
   It is not sufficient, however, if only the steering lock limiter becomes effective. The return force of the rotary piston valve or rotary slide valve must also be overcome. Steering wheel force is aprox. 100 N / 10 kp.

3. If the specified value is not reached on the left-hand or right-hand side (excessive drain flow), replace the steering gear assembly.

Printed in Germany – XX, 1993

Carrera 2

Page

Front wheel suspension

Wheel hub to wheel bearing screw connection . . . . . 40 - 101
Wheel hub to wheel bearing bolt union on the Carrera RS . . . . . 40 - 103

Antiblock System

ABS test on 911 Carrera 2 using ABS 2-LED tester . . . . . 45 - 101

Brakes - mechanical brake system

Technical data . . . . . 46 - 0101

Brakes, hydraulics - regulator, booster

Quickfill brake master-cylinder (bleeding/note) . . . . . 47 - 101

Printed in Germany - XXII, 1995

Wheel hub to wheel bearing screw connection

General

In the course of the 1992 Model Year, the wheel hub to wheel bearing screw connection was modified on the 911 Carrera 2, 911 Turbo-Look, America Roadster and 911 Turbo.
Initially, a 4 mm washer (2a) was added between the tensioning shim (2) and the bolt head (1).

At a later date, the tensioning shim (2) was reinforced. The washer (2a) was omitted again as of this date.

For detailed introduction dates, please refer to the Technical Information, Group 4.

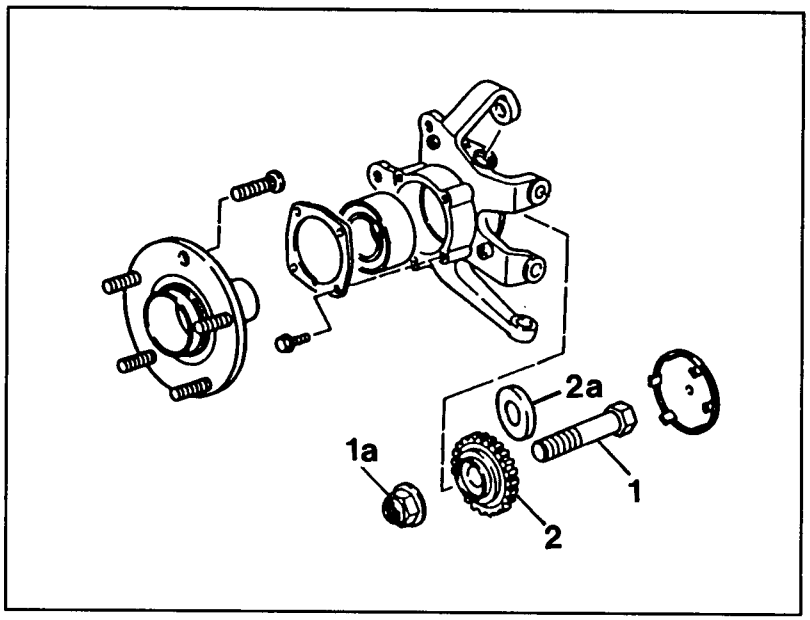

1326-40

1 - Bolt
1a - Nut
2 - Tensioning shim with ABS ring gear
2a - Washer

Versions of screw connection

A = Initial version
B = Modified version (as initial version, with additional 4 mm washer)
C = New version (reinforced, without washer)

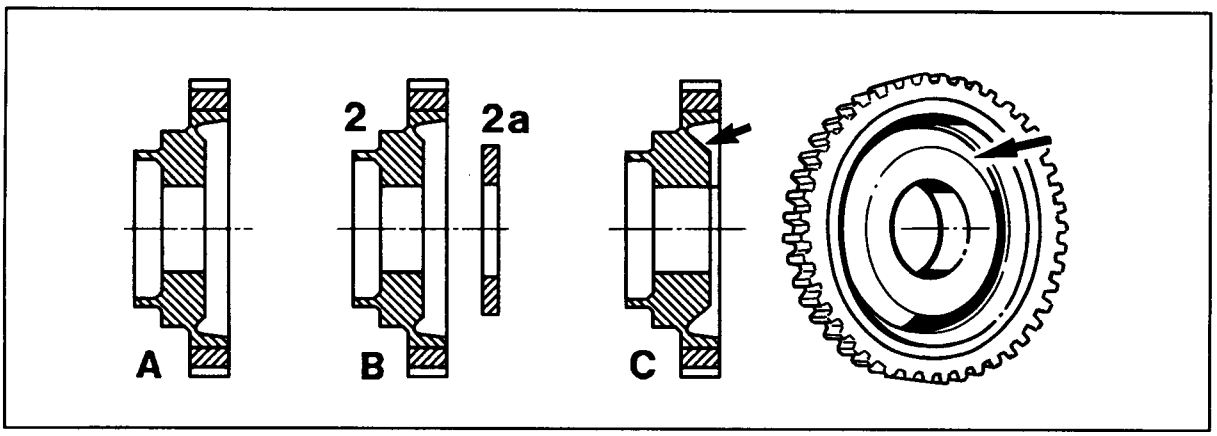

2 - Tensioning shim
2a - Washer

Assembly notes

- Only the **reinforced** tensioning shim with ABS ring gear is now supplied by the spare parts department.

- This reinforced tensioning shim is also retroactively applicable if repairs are required.

- **The additional washer must not be fitted with the reinforced tensioning shim!**
  The washer is not supplied for spares purposes. If the washer is faulty or missing, fit the **reinforced tensioning shim** instead.

- The tightening torque for the wheel hub to wheel bearing screw connection of the front axle is **460 Nm.** This value is applicable to all modification levels (A / B / C).

Wheel hub to wheel bearing bolt union on the Carrera RS

General

On the 911 Carrera RS, both the tensioning stud (No. 2) and the wheel hub are made of aluminum. A spacer is therefore inserted between the wheel bearing inner race (on the outside) and the wheel hub.
The following assembling instructions should be adhered to during all removal and installing operations.

Assembly notes

Undo and tighten the lock nut (No. 1) with the vehicle on its wheels. Actuate the brakes at the same time. When undoing the tensioning stud, raise the vehicle immediately after undoing the lock nut. When fitting the tensioning nut, screw the lock nut in place before lowering the vehicle onto its wheels. If this precaution is not observed, the wheel bearing may be damaged.
To keep the assembly from turning when undoing the lock nut or when fitting the tensioning stud, a 3/4 inch square is provided on the tensioning stud.

Replace the spacer and the lock nut when repairs are required. Check the tensioning stud visually and replace it if required.

The tightening torque of the wheel hub to wheel bearing bolt union is **460 Nm (339 ftlb.).**

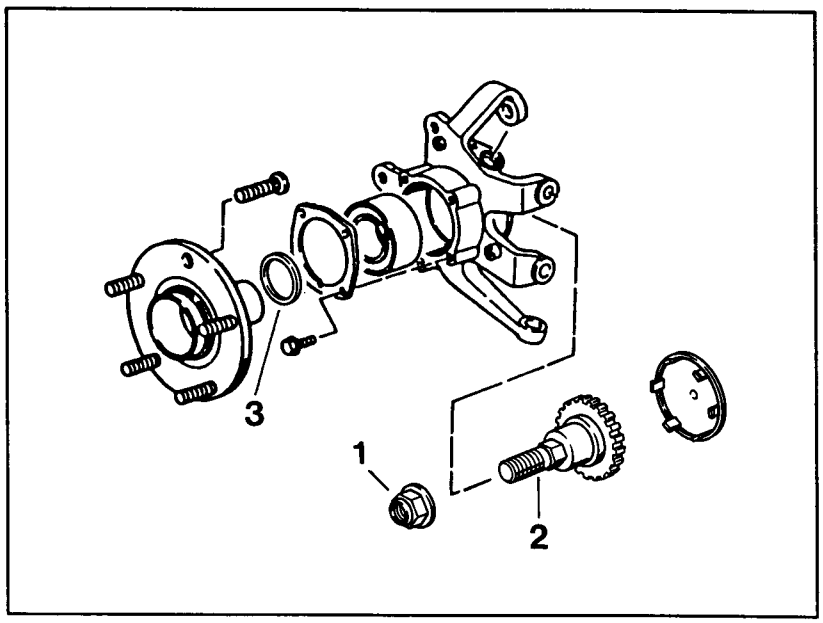

2048-40

1 - Lock nut
2 - Tensioning stud
3 - Spacer ring

Printed in Germany XXII, 1994

Technical Data

The technical data are valid for the 911 Carrera 2, 911 Speedster and 911 Carrera RS America.

Designation		Remarks, Specification	Wear Limits
Service brake (foot-operated)		Hydraulic dual circuit brake system with front/rear axle brake circuit division. Vacuum brake booster, inboard vented brake discs with four-piston fixed calipers at the front axle and two-piston fixed calipers or four-piston fixed caliper at the rear axle. ABS standard.	
Brake booster (vacuum)		8 inches	
Boosting factor		3.0	
Brake master cylinder	Ø front	20.64 mm	
Filling stage (Quickfill)	Ø rear	20.64 mm	
	Stroke	20/16 mm	
Brake force regulator			
Switchover pressure reducing factor			
for two-piston **rear-axle** brake caliper		45 bar - 0.46	
for four-piston **rear-axle** brake caliper		55 bar - 0.46	
Brake disc Ø front		298 mm	
rear		299 mm	
Effective brake disc Ø front		248 mm	
rear: two-piston fixed caliper		252 mm	
rear: four-piston fixed caliper		246 mm	
Piston Ø in brake caliper			
front		2 x 40 + 2 x 36 mm	
rear: two-piston fixed caliper		2 x 44 mm	
rear: four-piston fixed caliper		2 x 30 + 2 x 28 mm	
Brake pad area			
front		172 cm^2	
rear: two-piston fixed caliper		112 cm^2	
rear: four-piston fixed caliper		172 cm^2	

Printed in Germany – XX, 1993

Designation		Remarks, Specification	Wear Limits
Total brake pad area with			
two-piston fixed caliper		284 cm^2	
four-piston fixed caliper		344 cm^2	
Pad thickness	front	approx. 12 mm	2 mm
	rear	approx. 10 mm for 4-piston fixed caliper	2 mm
Brake disc thickness (new)	front	28 mm	
	rear	24 mm	
Brake discs			
Minimum thickness* after machining			
	front	26.6 mm	26.0 mm
	rear	22.6 mm	22.0 mm
Max. brake disc thickness tolerance		0.02 mm	
Max. brake disc lateral runout		0.05 mm	
Lateral runout of wheel hub max.		0.05 mm	
Max. lateral runout of brake disc in installed state		0.1 mm	
Max. peak-to-valley surface finish after machining		0.006 mm	
Push rod play (measured on brake pedal plate)		approx. 8 mm	
Parking brake		mechanical via brake drums on both rear wheels	
Brake drum Ø		180 mm	181 mm
Brake shoe width		25 mm	
Brake liner thicknesss		4.5 mm	2 mm

* Brake discs may only be machined symmetrically, i. e. uniformly on both sides.

Technical data

The technical data are valid for the 911 Carrera 2 Turbo-Look, 911 America Roadster and 911 Carrera RS.
TL = Carrera 2 Turbo-Look. Carrera 2 Turbo-Look specif. are also valid for the 911 America Roadster.
RS = 911 Carrera RS. For the 911 Carrera RS America, the values from p. 46-0101/0102 apply.

Designation		Remarks, dimensions	Wear limit
Service brake (foot brake)		Hydraulic dual-circuit brake system with front axle/ rear axle brake circuit division. Hydraulic brake booster, internally vented and drilled brake discs with four-piston fixed caliper on front and rear axle. ABS standard.	
Brake booster		hydraulic	
Boost factor	TL	4.8	
	RS	3.6	
Brake master cylinder	Ø front	23.81 mm (**RS** 25.4 mm)	
	Ø rear	23.81 mm (**RS** 25.4 mm)	
	stroke	20/12 mm	
Brake power controller			
Switchover press. / red. factor	TL	60 bar - 0.46	
	RS	55 bar - 0.46	
Brake disc Ø	front	322 mm	
	rear	299 mm	
Effective brake disc Ø	front	268 mm	
	rear TL	249 mm	
	rear RS	246 mm	
Piston Ø in caliper	front	2 x 44 + 2 x 36 mm	
	rear	2 x 34 + 2 x 30 mm	
Brake pad area	front	250 sq.cm	
	rear	172 sq.cm	

Printed in Germany – XVIII, 1992

Designation		Remarks, dimensions	Wear limit
Total brake pad area		422 sq.cm	
Pad thickness	front	approx. 12 mm	2 mm
	rear	approx. 12 mm	2 mm
Brake disc thickness, new	front	32 mm	
	rear TL	28 mm	
	rear RS	24 mm	
Minimum brake disc thickness* after machining	front	30.6 mm	30.0 mm
	rear TL	26.6 mm	26.0 mm
	rear RS	22.6 mm	22.0 mm
Thickness tolerance of brake disc, max.		0.02 mm	
Lateral runout of brake disc, max.		0.05 mm	
Lateral runout of wheel hub, max.		0.05 mm	
Lateral runout of brake disc when fitted, max.		0.1 mm	
Surface roughness after machining, max.		0.006 mm	
Pushrod clearance (measured at brake pedal plate)		approx. 8 mm	
Parking brake (handbrake)		mechanical drum brake, acting on both rear wheels	
Handbrake drum Ø		180 mm	181 mm
Brake shoe width		25 mm	
Brake lining thickness		4.5 mm	2 mm

* The brake disc must only be machined symmetrically, i.e. by an equal amount on both sides.

Printed in Germany – XVIII, 1992

ABS test on 911 Carrera 2 using ABS 2-LED tester

Important notes on the 911 Carrera 2 ABS

1. Whenever work is carried out on the hydraulic unit, speed sensors or pipes, or any assemblies are exchanged, for example during accident repairs, **a functional check with the ABS tester must always be performed.**
   This is to prevent electrical wiring or hydraulic lines from being connected up wrongly, and to ensure that the hydraulic unit operates correctly.

Tools

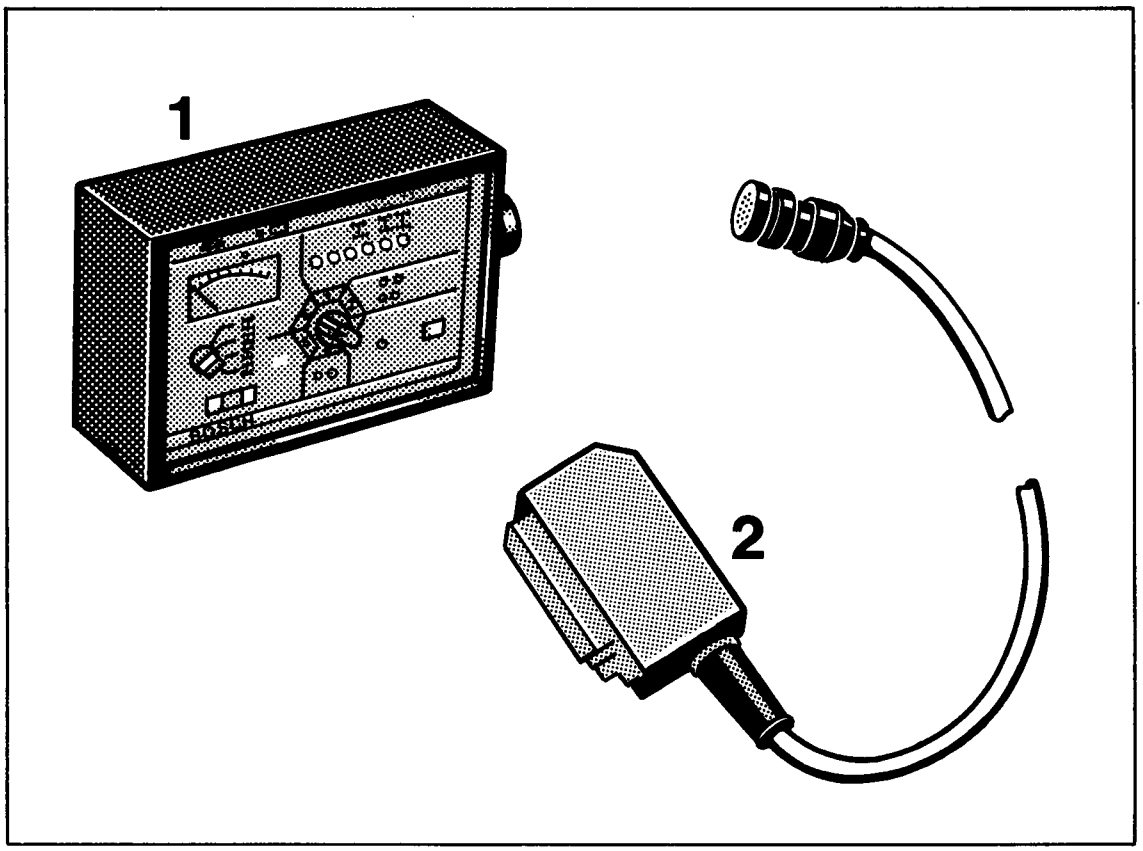

Printed in Germany – X, 1990

Tools

No.	Designation	Special tool	Order number	Explanation
1	ABS 2-LED tester		KDAS 0003	**Manufactured by:** Robert Bosch GmbH, Dept. KH/VKD 3 P.O. Box 41 09 60 7500 Karlsruhe 41 Federal Republic of Germany Telephone: 0721/4009-1 Telex: 78 26 663 **Supplier:** Authorized dealer or parts distributor
2	35-pole ABS 2-LED adapter cable			Included with ABS 2-LED tester

Printed in Germany – X, 1990

Quickfill brake master cylinder

Assembly notes

Pull out and engage the Quickfill brake master cylinder in a straight line during dismantling and assembly, respectively. If this precaution is not observed the brake booster may be damaged.

Chainging the brake fluid / bleeding the brakes

Notes

The filling stage of the brake unit may cause air to remain trapped in the hydraulic brake system without this being felt directly at the brake pedal. **For this reason, the specified bleeding sequence must be strictly adhered to.**

Use only new DOT 4 brake fluid.
Observe change intervals and brake fluid grade.
Total brake fluid quantity for fluid change: **approx. 1 liter.**

On vehicles up to MY '92, the brake fluid must be replaced **every 2 years** as a minimum.

As of MY '93, the brake fluid change interval has been increased to **3 years** - along with the use of special DOT 4 brake fluid.

The 3-year change interval is valid as of MY '93, but only in conjunction with the use of the special Porsche brake fluid. The brake fluid is available under Part No. 000.043.202.04.
Container contents: 5 liters (as of May, 1992).

This special brake fluid may also be used on pre-MY '93 vehicles. However, the **two-year** fluid change interval will remain valid for those vehicles.

Brake fluid

The new brake fluid - Part No. 000.043.202.04 - offers superior properties. Compared to the brake fluid specified previously, its main features are **further reduction of water absorption and increased wet and dry boiling points.**
Notes on water absorption: Water contents of only 2 % in the brake fluid will cause the boiling point to drop by approx. 60°C.

As of MY '93, only the new brake fluid must be used when topping up the reservoir. Any mixture of former brake fluid with the new brake fluid causes the safety margin of the fluid to be narrowed down unnecessarily. Both the former and the new brake fluid are of amber color.

Procedure for bleeding and changing the fluid

1. Top up reservoir with fresh brake fluid up to upper edge. **Connect bleeder unit to reservoir. Block overflow (vent) hose using a hose clamp.** Switch on bleeder unit. Bleeding pressure approx. 2 bar.

Printed in Germany – XVI, 1992

2. The Quickfill brake master cylinder is fitted with a bleeder valve (arrow) for bleeding the filling chamber.
   Start by bleeding the filling chamber.
   Caution: As opposed to other bleeding operations, the brake pedal must be actuated with sufficient force at least 4 times when the respective bleeder valves are opened. It is important to release the pedal fully before and after it is actuated and to depress it fully to the stop.

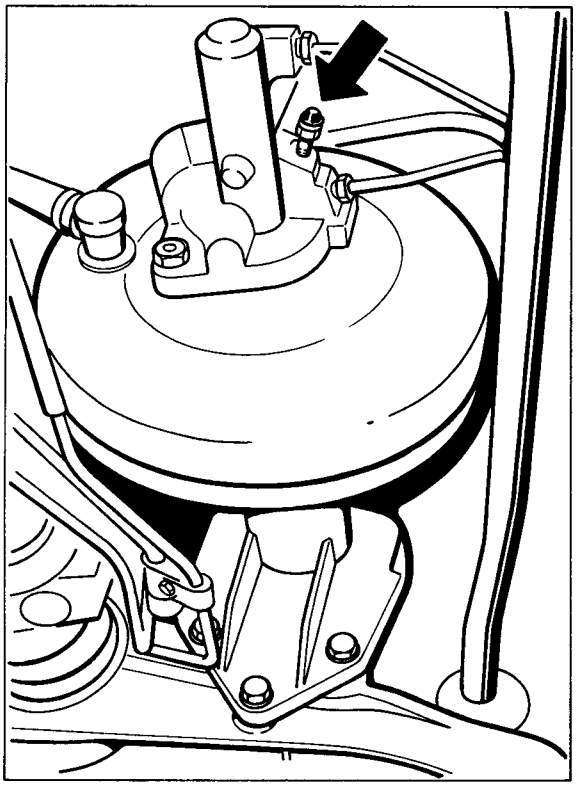

634 - 47

3. Proceed by bleeding or changing the brake fluid, respectively, at the calipers (no specific sequence needs to be observed).
   Open each bleeder valve only until clear, bubble-free brake fluid escapes or until the respective fluid change quantity per brake caliper is reached.
   Make sure that both bleeder valves of the four-piston fixed calipers are bled and that the brake pedal is actuated with sufficient force 4 times for each of the valves **(as described under para. 2. above)**.

4. When changing the brake fluid, also drain some brake fluid at the bleeder valve of the clutch slave cylinder.

5. **Switch off and disconnect bleeder.**
   Remove hose clip from overflow hose (vent). If required, top up brake fluid level.

Printed in Germany – XVI, 1992

Workshop Manual

911

Carrera 4

Dr. Ing. h.c. F. Porsche Aktiengesellschaft

The workshop manual is only for the internal use of the Porsche Dealer Organization.

© 1988 Dr. Ing. h.c. F. Porsche
Aktiengesellschaft
Technical Service Department
D-7140 Ludwigsburg

All rights reserved – Printed in Germany

WKD 482520

List of Repair Groups Carrera 4

General	Technical Data	Page 0.1
Repair Groups		Group
Volume I	Maintenance, Self-diagnosis	03
	Engine, Crankcase, Suspension	10
Engine,	Engine, Crankshaft, Pistons	13
Maintenance	Engine, Cylinder Head and Valve Drive	15
	Engine, Lubrication	17
	Engine, Cooling	19
	Fuel Supply	20
	Fuel System, Electronic Injection	24
	Exhaust System/Emission Controls	26
	Starter, Power Supply, Cruise Control	27
	Ignition System	28
	Diagnosis	
Volume II	Clutch, Controls	30
	Clutch	32
Transmission	Manual Transmission, Controls, Case	34
(manual)	Manual Transmission, Gears, Shafts	35
	Differential, Transaxle System, All-Wheel Drive	39
	Diagnosis	
	Clutch, Controls	30
Volume III	Torque Converter	32
	Automatic Transmission, Controls, Case	37
Transmission	Automatic Transmission, Gears, Shafts	38
(automatic)	Differential, Transaxle System	39
	Diagnosis	
Volume IV	Front Wheel Suspension	40
	Rear Wheel Suspension, Axle Shaft	42
Chassis	Wheels, Tires, Alignment	44
	Antiblock System	45
	Brakes, Mechanical	46
	Brakes, Hydraulics, Regulator, Booster	47
	Steering	48
	Diagnosis	
Volume VI	Body-Front Section	50
	Body-Center Section	51
Body	Body-Rear Section	53
	Lids	55
	Doors	57
	Electric Sunroof	60
	Hardtop	61
	Bumpers	63
	Glasses, Window Control	64
	Exterior Equipment	66
	Interior Equipment	68
	Seats	72
	Seat Covers	74
Volume VI	Heater	80
	Ventilation	85
Heating, Ventilation,	Air Conditioner	87
Air Condition	Diagnosis	
Electrics	Instruments, Fuel Gauge, Alarm System	90
	Radio, Telephone, On-board-computer	91
	Windshield Wipers and Washer	92
	Exterior Lights, Lamps, Switches	94
	Interior Lights	96
	Diagnosis	
Volume VII	Wiring	97
Electrics		
Wiring Diagrams		

Printed in Germany, 1988

Survey of Information Published in Technical Manual beginning in 1985

6 Cyl.

5

	TI/ QI		No.	911 C2-C4	911		911 turbo	Remarks, Model, Also refer to...	Date
1985									
– Door Locks	Q		1/85		●		●	Grease	10.04.85
1986									
– Door Opener, Inside	Q	♦	1/86		●		●	Operating force reduced	18.04.86
– Ignition Keys Loose Porsche Coat of Arms	Q		2/86		●		●		09.05.86
– Lockable Tank Cap	Q		3/86		●			Targa and Convertible	09.05.86
– Door Door Outside Handle and Door Lock	Q		4/86		●		●	Operating force reduced	25.11.86
1987									
1988									
– Door Sealing	Q		1/88		●		●	Paint Drain Hole/ Rubber Grommet	30.05.88
– Door Door Retarder	Q		2/88		●		●	Similar to 928 S4	30.05.88
– Club Sport Carts Undercoating	Q		3/88		●			Standard PVC Undercoat	21.06.88
– Service Installation of Wind Deflectors (Spoilers)	T		1/88		●			Installation instructions- No.: 000.043.121.00	12.10.88
1989									
– Modifications on Doors and Hinge Pillars	T		1/89	●			●	Attach door contact switch lower down.	14.11.89
– Water Drain in Spare Wheel Well	T	♦	2/89	●				WK 02 66000	08.06.89
1990									
– Front fender assembly	T		1/90	●				2 spot welds to aid positioning and assembly.	28.02.90
– Modified support rod on rear side panels	T	♦	2/90	●				Crack formation in area of tail lights	08.06.90

♦ = Conversion instructions or workshop campaign
∇ = Brochure
⊕ = Supplement or change for TI/QI

SERVICE

Date
30.04.90 | 31.12.90
VKQPI

Copyright by Dr. Ing. h. c. F. Porsche Aktiengesellschaft

Survey of Information Published in Technical Manual beginning in 1985

6 Cyl. 6

	TI/QI		No.	911 C2/C4	911		911 Turbo	Remarks, Model, Also refer to...	Date
1985									
– Front Seat Belts	Q		1/85		●		●	Washer	10.04.85
– Cabrio Top Locating Pins	Q		2/85		●			Loctite No. 270	10.04.85
– Sun Roof	Q		3/85		●		●	Noise/...QI-5/85	07.06.85
– Cabrio Top	Q		4/85		●			Noise/eccentric disc	07.06.85
– Hardtop-Installation Instructions	T	♦	2/85		●				02.07.85
– Sun Roof	Q	♦	5/85		●		●	1983-86 Models noise	29.11.85
– Scratched Rear Window Panel Cabriolet	Q		6/85		●			Polish	29.11.85
1986									
– Body Paint Finish	Q		1/86		●		●	Data plates	16.01.86
– Hardtop Modifications	T		1/86		●			Supplement for TI 2/85	10.04.86
– Convertible Top	T	∇	2/86		●			WKD 492 720 WKD 492 620	14.03.86
– Electrically Operated Convertible Top	Q		2/86		●			12-pin plug	13.08.86
– Power Windows Door Window Adjustment	Q		3/86		●			Targa and Convertible ...QI-3/87	10.10.86
– Sealing Jobs on Coupes, Targas and Convertibles	T	∇	3/86		●		●	WKD 493 820	30.12.86
1987									
– Convertible Convertible Top	Q	♦	1/87		●			Pulling in steel cable	20.02.87
– Convertible Rear Window	Q		2/87		●			1986-1987 Models/ scratches/screw	18.06.87
– Power Windows Window Lifting Stop	Q		3/87		●		●	Targa and Convertible ...QI-3/86	31.08.87
– Basic Adjustment on Electrically Operated Top	T	♦	1/87		●		●	Repair note	25.10.87
1988									
1989									
– Convertible and Speedster Top Waterproofing	T		1/89		●			Hood spray/600 ml 000.043.123.00	04.08.89

♦ = Conversion instructions or workshop campaign
∇ = Brochure
⊕ = Supplement or change for TI/QI

Copyright by Dr. Ing. h. c. F. Porsche Aktiengesellschaft

Survey of Information Published in Technical Manual beginning in 1985

6 Cyl.

6

	TI/ QI		No.	911 C2-C4	911		911 turbo	Remarks, Model, Also refer to...	Date
1990									
– Cabriolet folding top	T	♦	1/90	●	●		●	Centre pillar abrasion point. Abrasion pro tection	16.02.90
– Safety belts, rear	T		2/90	●				Cap deformed by neat.	23.03.90
– Convertible and Speedster Top Water-proofing	T		3/90		●			Replaces T № 1/89 of 04.08.89	15.05.90
– Airbag-System	T	∇	4/90	●			●	WKD 497 120	16.11.90

♦ = Conversion instructions or workshop campaign
∇ = Brochure
⊕ = Supplement or change for TI/QI

Copyright by Dr. Ing. h. c. F. Porsche Aktiengesellschaft

Survey of Information Published in Technical Manual beginning in 1985

6 Cyl.

7

	TI/QI		No.	911 C2/C4	911		911 Turbo	Remarks, Model, Also refer to...	Date
1985									
– Comfort Seats New Seat Generation	Q		1/85		●		●	1985 Model/correction	15.02.85
– Power Seat Backrest Control	Q		2/85		●		●	Flexible shaft / 5mm	22.10.85
1986									
– Seat Heating	Q		1/86		●		●	Operation	18.04.86
– Seat Heating Testing Information	Q	⊕	1/86		●		●		07.07.86
– Seat Heating Modified Operating Switch	Q	⊕	1/86		●		●		07.07.86
– Repairing Seat Heating	T	♦	1/86		●		●	Repair note	30.12.86
1987									
1988									
1989									
– Speedster Seat Heating/Power Window Relay	T		1/90		●			Speedster vehicles with power window relay.	18.12.89
1990									

♦ = Conversion instructions or workshop campaign
∇ = Brochure
⊕ = Supplement or change for TI/QI

SERVICE

Date 30.04.90 VKQPI

Copyright by Dr. Ing. h. c. F. Porsche Aktiengesellschaft

The workshop manual of the Carrera 4 also includes that for the Carrera 2.
The Carrera 4 acts as the basis for description of the repairs in the manual.
“Carrera 4" also appears on every page in the header line.

Deviating descriptions for repairs on the Carrera 2 follow those of the Carrera 4. These repair descriptions for both models are separated by a yellow sheet.
“Carrera 2" appears on all pages in the header line after the separating sheet. The page number starts with 100 as an additional distinction.

Page

Body, general

Repair inspection dimensions . . . . . 50 - 01
Special tools and sheet metal working equipment for repairs . . . . . 50 - 07
Safety notes . . . . . 50 - 011
HS steel body panels . . . . . 50 - 013

Body, front section

Partially renewing the front section . . . . . 50 - 1
Completely renewing the front section . . . . . 50 - 5
End part replacement . . . . . 50 - 13
Partial replacement of wheel house and side member . . . . . 50 - 19
Partial replacement of the fender connection plate . . . . . 50 - 25

Body-Center Section

Rartially replacing door sill with side member and floor pan . . . . . 51 - 1
Partially replacing door sill with side member . . . . . 51 - 7
Replacing door sill . . . . . 51 - 11
Replacing the complete roof . . . . . 51 - 15
Replacing part of roof . . . . . 51 - 23
Removing cracking noises in the roof rail area . . . . . 51 - 29

Body-Rear section

Renewing the rear-axle cross tube . . . . . 53 - 1
Renewing side panel with inner side section and side member . . . . . 53 - 9
Renewing rear-axle cross-member . . . . . 53 - 17
Partly renewing rear section of body . . . . . 53 - 21
Renewing engine mount . . . . . 53 - 27
Partly renewing side panel . . . . . 53 - 31
Replacing threaded section of oil filler neck . . . . . 53 - 37

Printed in Germany - XXII, 1995

Lids

Adjusting upper lock section . . . . . 55 - 1
Dismantling and assembling front cover . . . . . 55 - 3
Dismantling and assembling rear cover . . . . . 55 - 9

Doors

Dismantling and assembling the door . . . . . 57 - 17
Adjusting height stop of door window . . . . . 57 - 7

Bumpers

Removing and installing the front-end panels and bumper . . . . . 63 - 1
Removing and installing the tail panels and bumper . . . . . 63 - 5

Glazing, window control

Removing and installing vehicle windows . . . . . 64 - 1
Removing and installing the windshield . . . . . 64 - 2
Removing and installing side windows . . . . . 64 - 8
Removing and installing the rear window . . . . . 64 - 12
Bonding the interior rearview mirror in place . . . . . 64 - 17

Exterior equipment

Color range as from model 1989 . . . . . 66 - 01
Color range as from model 1990 . . . . . 66 - 02
Color range as from model 1991 . . . . . 66 - 03
Color range as from model 1992 . . . . . 66 - 04
Removing and installing the rear spoiler . . . . . 66 - 1
Removing and installing the sill cover . . . . . 66 - 7
Removing and installing the underbody cladding . . . . . 66 - 11
Bonding retainer bracket to side member panel . . . . . 68 - 15

Interrior equipment

Safety regulations for handling airbag vehicles . . . . . 68 - 1
Removing and installing airbag components . . . . . 68 - 3
Checking airbag system operation . . . . . 68 - 8a
Center console / Information on acceleration sensors for longitud. and transv. locks . . 68 - 9
Right-hand front floor sound deadenting . . . . . 68 - 10
Checking safety belts . . . . . 68 - 11
Correct disposal of airbag units . . . . . 68 - 13
Replacing horn buttons on airbag steering wheel . . . . . 68 - 19

Printed in Germany - XXII, 1995

Page

Replacing front cover rail and front compartment carpet . . . . . 68 - 21
Dismantling and assembling the glove compartment lis . . . . . 68 - 29
Diagnosis . . . . . D 68 - 1

Seats

Checking seat heating . . . . . 72 - 1
Calibrating controllable seat heating . . . . . 72 - 3

Printed in Germany - XXII, 1995

Repair check dimensions

Printed in Germany – VI,1990

Dimensions for underbody

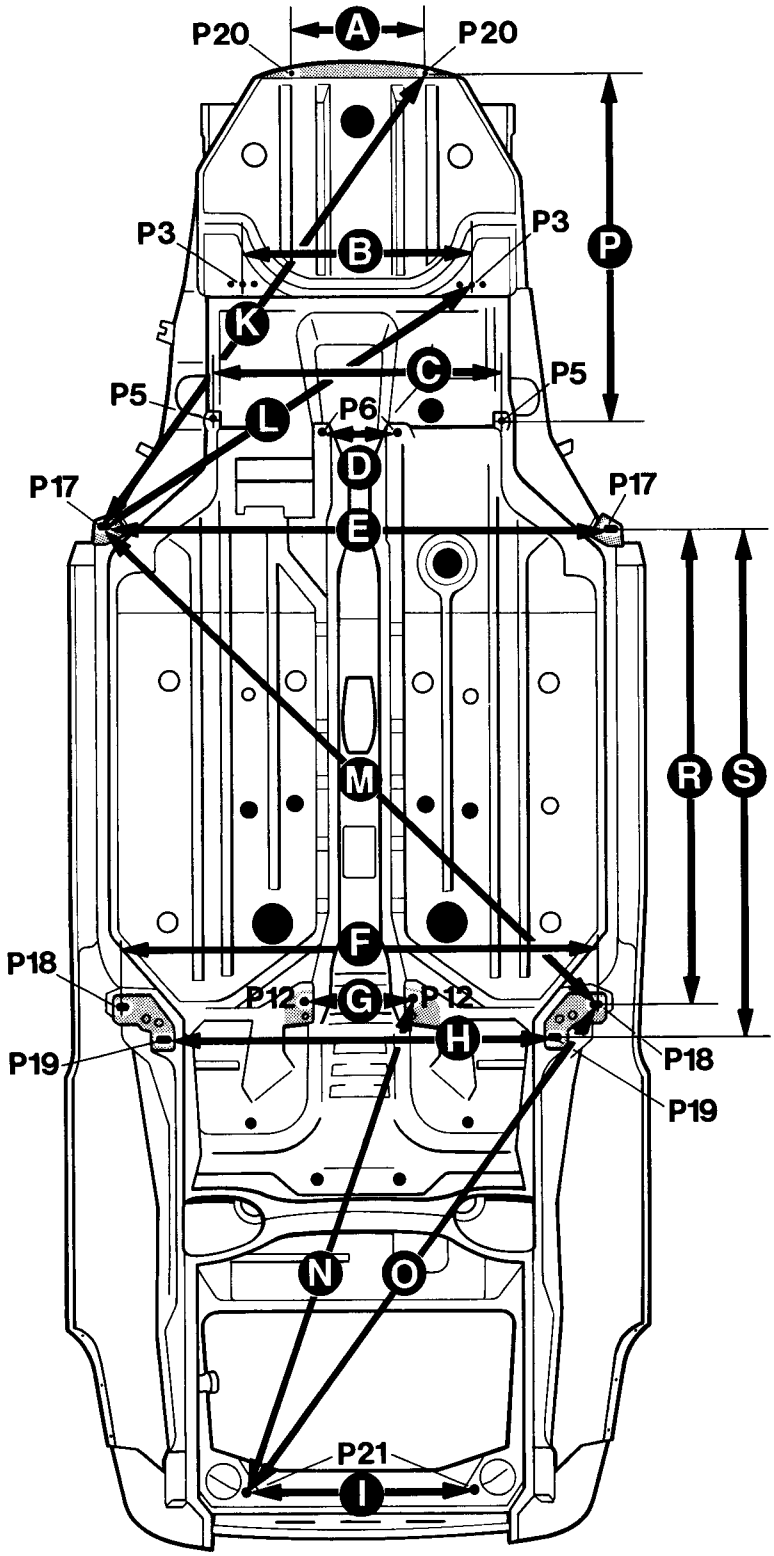

Dimensions for floor assembly

Dim.	Designation	mm
A	Point 20 Take up hole - front cover plate	440 ± 2
B	Point 3 Take up hole - side member, front axle	610 ± 1
C	Point 5 Take up hole - outer cross member, front axle	770 ± 2
D	Point 6 Take up hole - inner cross member, front axle	204 ± 2
E	Point 17 Take up hole - platform, jack front	1330 ± 1
F	Point 18 Take up hole - jack - rear	1236 ± 1
G	Point 12 Take up hole - transmission carrier	278 ± 1
H	Point 19 Take up hole - platform - rear	1018 ± 1
I	Point 21 Take up hole - engine mount inner	640 ± 1
K	Point 20 - Point 17	(1500 ± 3)
L	Point 3 - Point 17	1174 (1170)
M	Point 17 - Point 18	1788 ± 3
N	Point 12 - Point 21	1492 ± 3 (1482 ± 3)
O	Point 18 - Point 21	1696 ± 3 (1653 ± 3)
P	Point 20 - Point 5	914.5 (913)
R	Point 17 - Point 18	1245 ± 2
S	Point 17 - Point 19	1328 ± 2

All dimensions are measured from or to center of hole

Note

The dimensions are measured directly and are therefore oblique dimensions.
The dimensions in brackets are measured vertically.

Attention

The deviation between left and right must not exceed the prescribed tolerances for longitudinal dimensions.

Printed in Germany – II, 1989

Dimensions for assembly

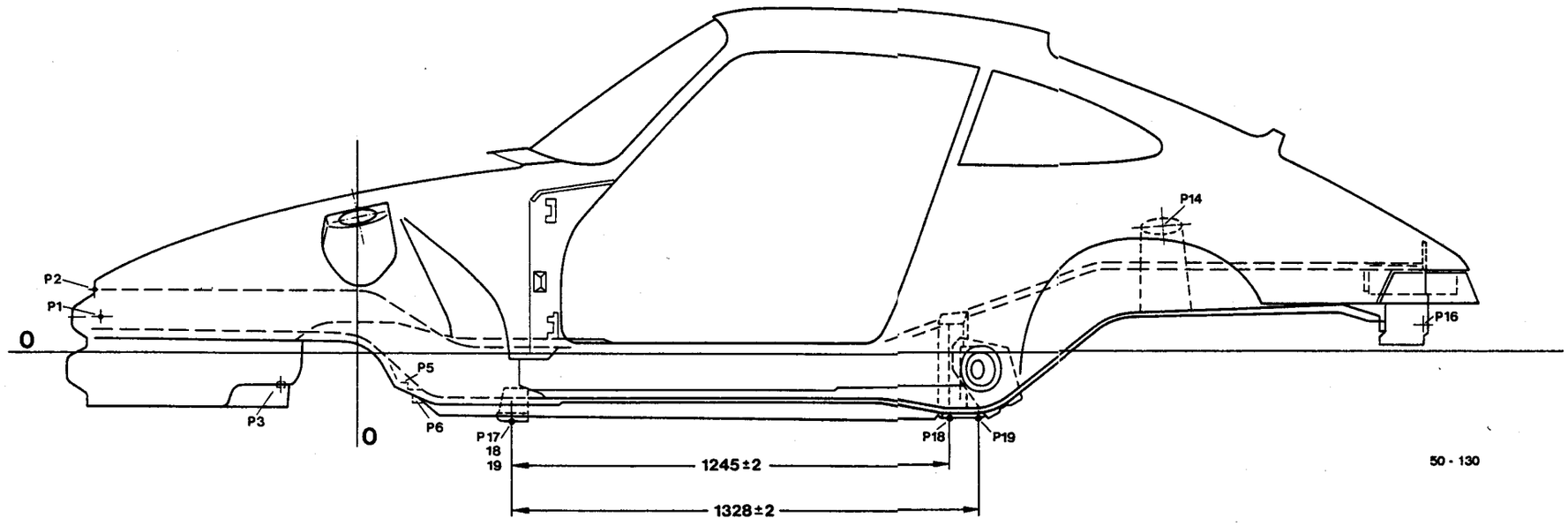

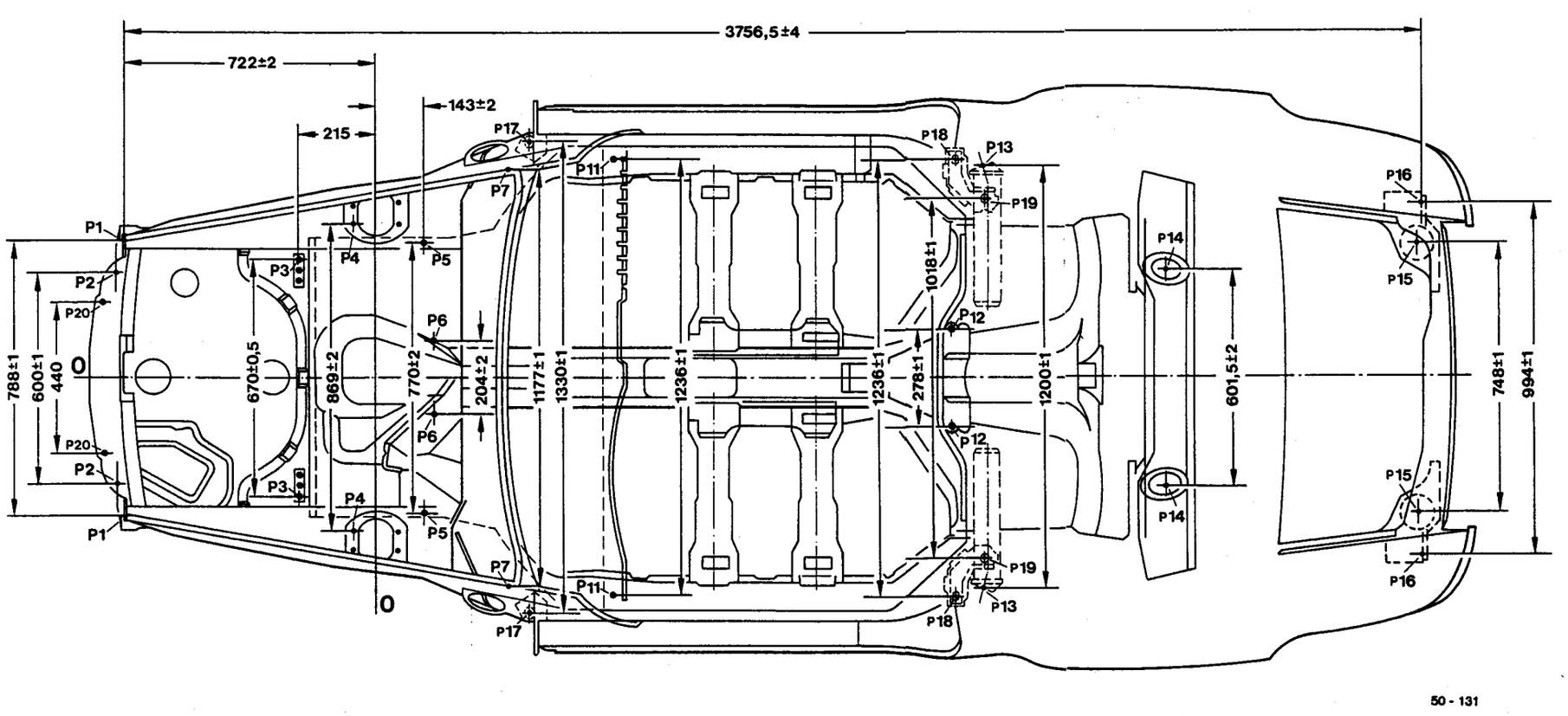

Point (left/right)	Description
1	Center bumper/impact absorbing tube, front
2	Mounting hole - final front section
3	Mount - FA side member
4	Mount FA spring strut
5	Mount - outer cross member FA
6	Mount - inner cross member FA
7	Mounting hole - wheel house
11	Mounting hole - switchboard
12	Mount - transmission cross member
13	Mount - outer cross tube RA
14	Mount - RA spring strut RA
15	Mount - engine bearing
16	Center of bumper/impact absorbing tube, rear
17	Jacking point - lifting platform, jack, front
18	Jacking point - jack, rear
19	Jacking point - lifting platform, rear
20	Hole - front final section

FA = Front axle
RA = Rear axle

Dimensions for assembly - from Model 91 onward

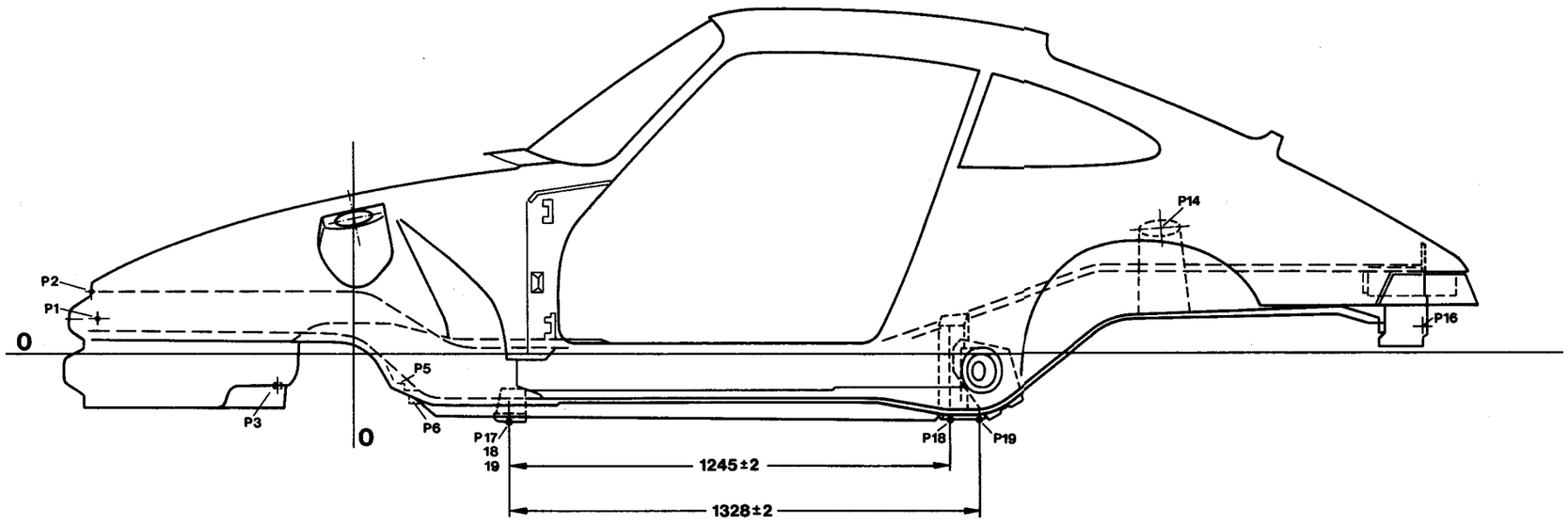

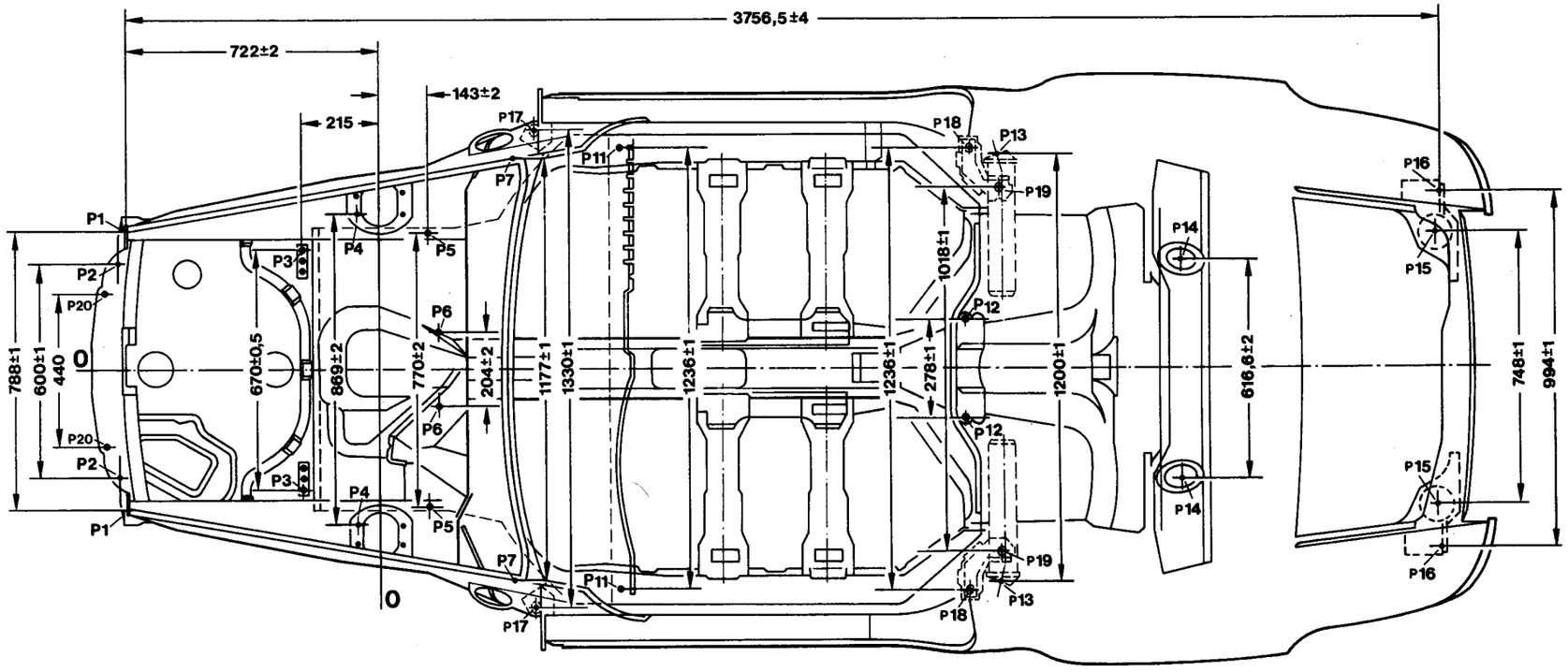

50-130

50-986

Point (left/right)	Description
1	Center bumper/impact absorbing tube, front
2	Mounting hole - final front section
3	Mount - FA side member
4	Mount FA spring strut
5	Mount - outer cross member FA
6	Mount - inner cross member FA
7	Mounting hole - wheel house
11	Mounting hole - switchboard
12	Mount - transmission cross member
13	Mount - outer cross tube RA
14	Mount - RA spring strut RA
15	Mount - engine bearing
16	Center of bumper/impact absorbing tube, rear
17	Jacking point - lifting platform, jack, front
18	Jacking point - jack, rear
19	Jacking point - lifting platform, rear
20	Hole - front final section

FA= Front axle
RA=Rear axle

Special Tools and Sheet Metal Machines for Repairs

Special Tools:

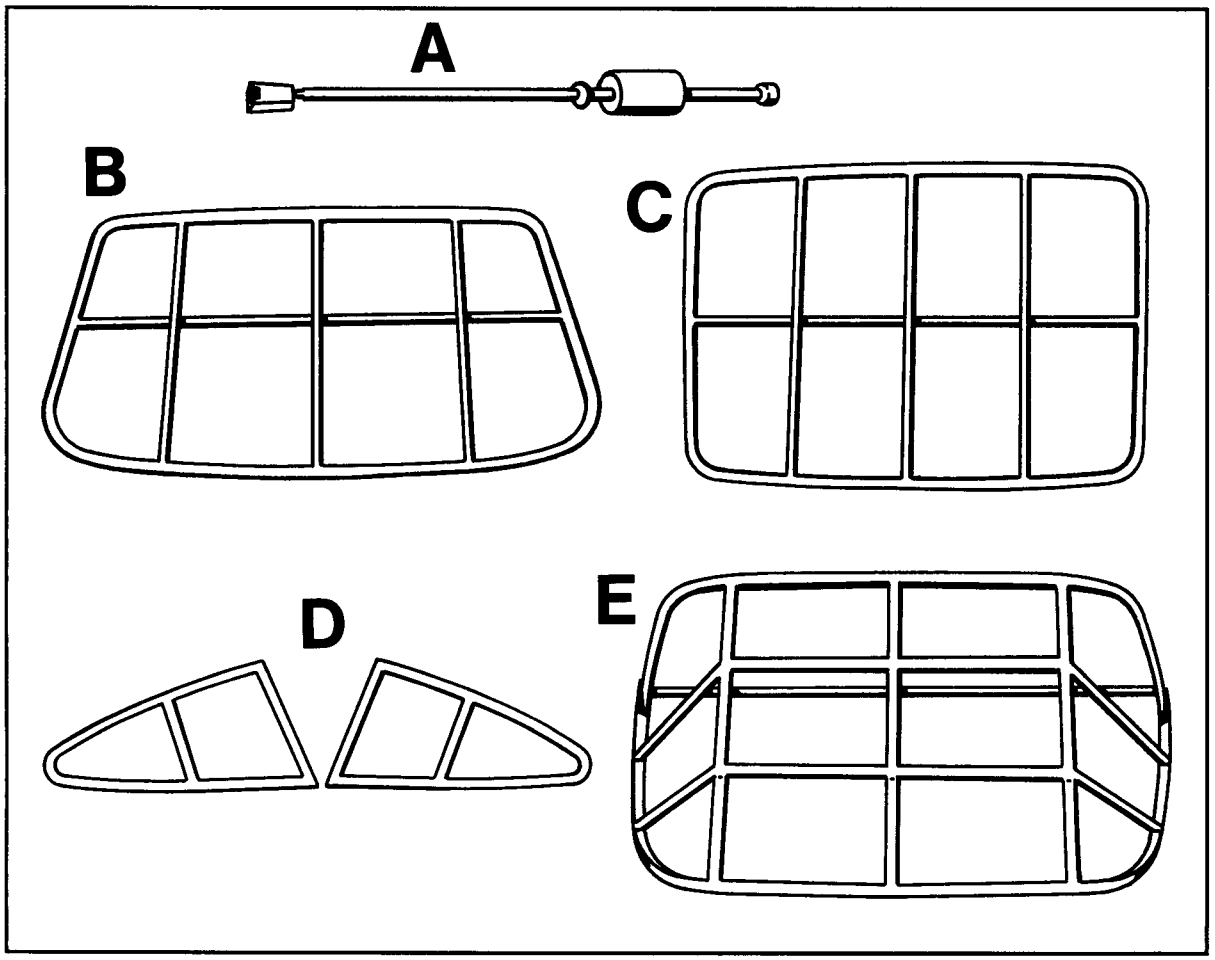

307 - 50

A = P 290 (special tool for removing and installing door hinge pins)

B = P 852 (gage for windshield)

C = P 853 (gage for rear window)

D = P 854 (gages for left and right rear side windows)

E = P 856 (gage for rear opening - Targa)

Printed in Germany – III,1989

Sheet Metal Machines (Standard):

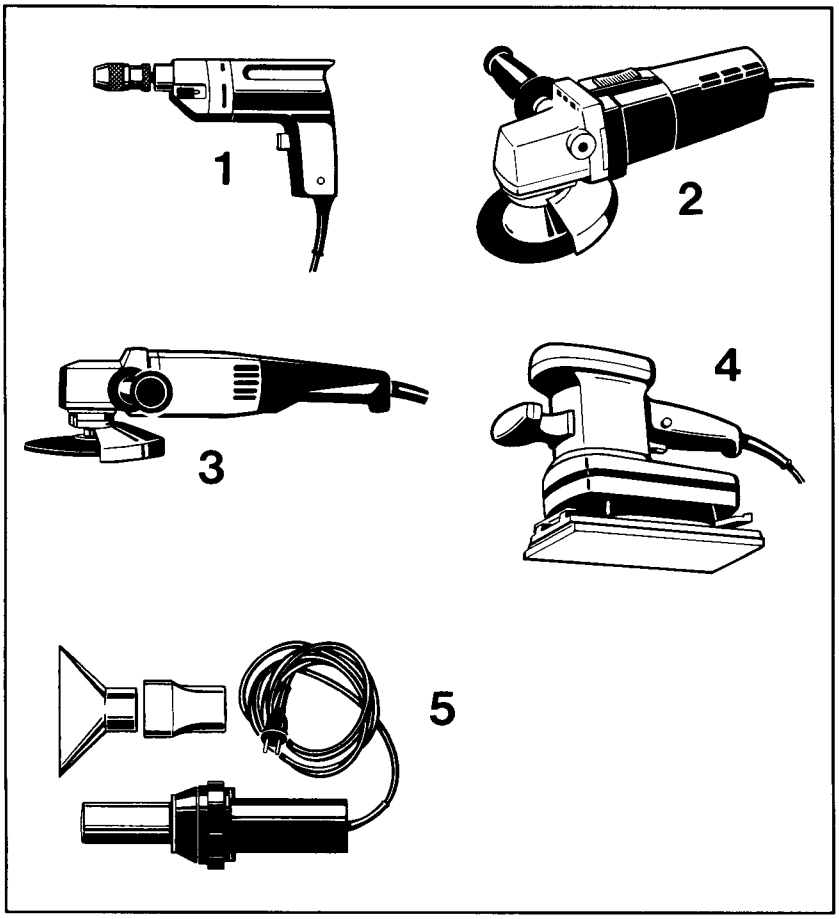

238 - 50

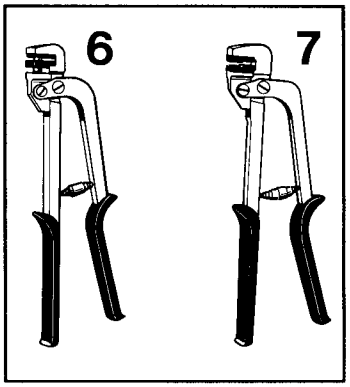

236 - 50

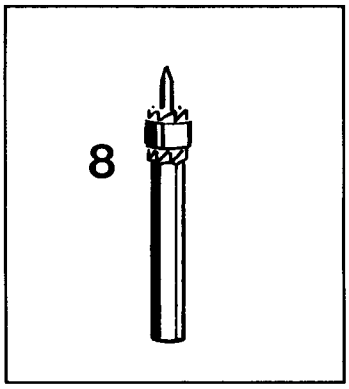

308 - 50

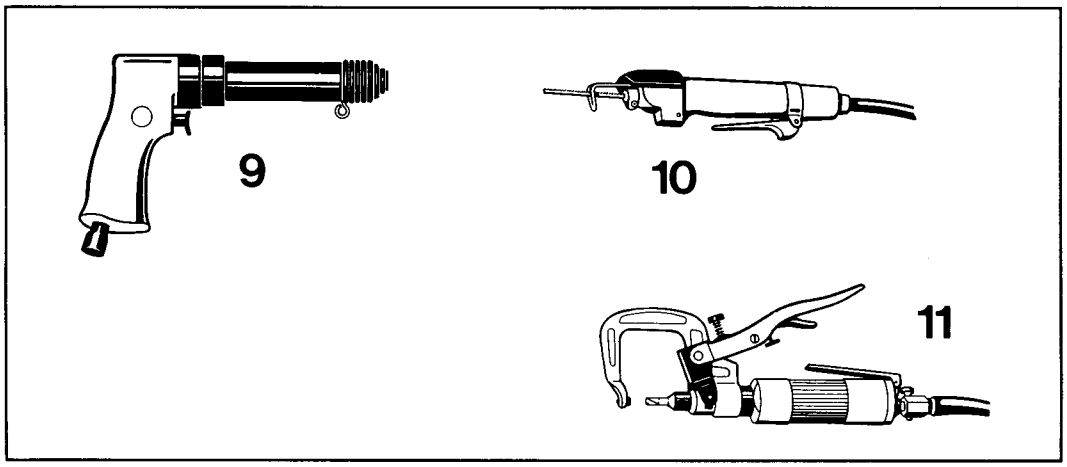

235 - 50

Printed in Germany – III,1989

Sheet Metal Machines (Standard):

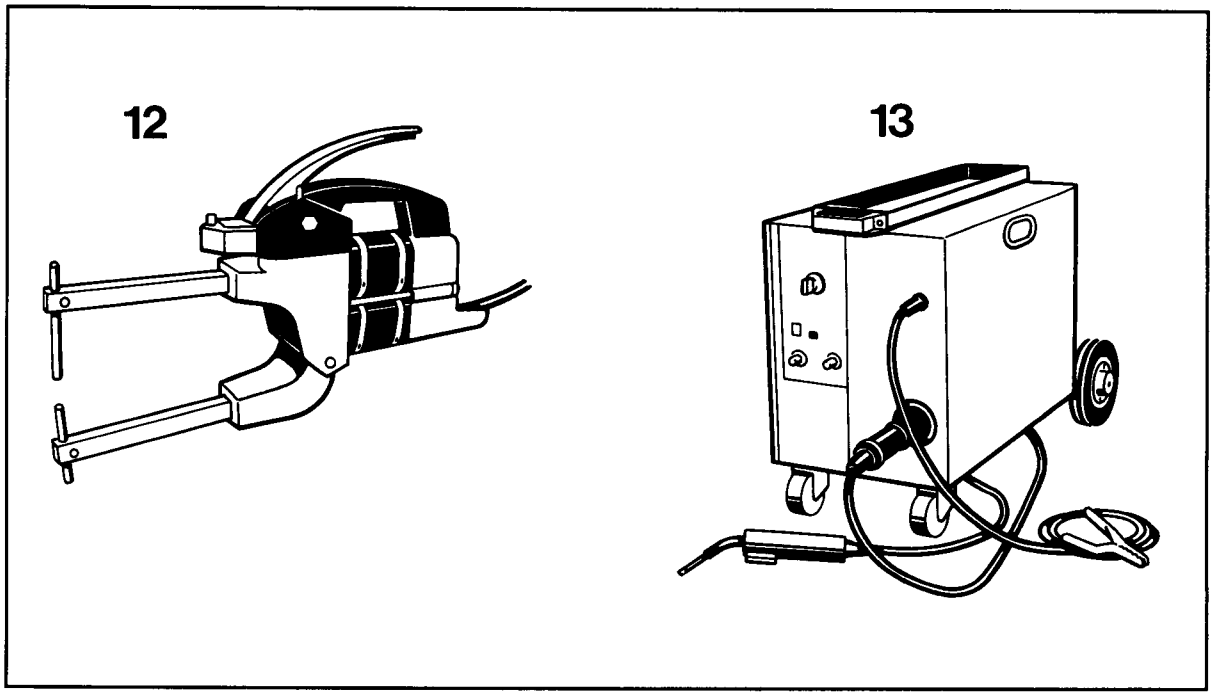

237 -50

Electric Tools:

1 = Drill
2 = Right angle grinder, large
3 = Right angle grinder, small
4 = Grinder
5 = Hot air blower

Mechanical Tools:

6 = Punch
7 = Shouldering pliers

Accessories:

8 = Welding spot cutter (for drill)

Pneumatic Tools:

9 = Chisel
10 = Body saw
11 = Welding spot cutter

Welding Tools:

12 = Spot welding tongs
13 = Inert gas welder

Printed in Germany – III,1989

Safety notes

Observe the following safety notes when performing body repairs:

- Removal of components may change the gravity center of the vehicle.
  The vehicle may therefore have to be tied down by additional measures on the lifting platform.

- Rooms designated for body repairs may not be used to stock other vehicles without protection (risk of fire damage due to sparks, battery, paint and body glass damage).

- Be extremely careful when grinding or welding in the vicinity of the fuel tank and other parts of the fuel system. If necessary, remove any components affected.

- Do not weld, braze or solder any parts of the filled air conditioning system. This also applies to welding, brazing or soldering operations on the vehicle that may result in the risk of components of the air conditioning system warming up.

- When drying the vehicle following a respray, do not expose the vehicle to temperatures of max. 80°C for more than 2 hours.

To protect **electronic control units** against **excessive voltage** when using **electric welding equipment**, observe the following safety measures:

- Disconnect clamp from negative battery terminal and cover negative battery terminal.

- Connect ground clamp of the electric welding equipment directly and as closely as possible to the component to be welded. Make sure no electrically insulated parts are located between the ground clamp and the welding location.

- Do not touch electronic control units and electric lines with the ground clamp or with the welding electrode.

Safety precautions for **operations involving open flames or spark generation** (welding, grinding) in the vicinity of the **battery** or near the location of the **battery vent hose**:

- Remove battery and store it in a safe place

- Blow through vent hose using compressed air. Plug hose ends. (The vent hose is routed into the left-hand wheel housing via an elbow fitting at the front, above the battery)

Printed in Germany – XVI, 1992

Handling of electronic control units after accident repairs

Replacement of electronic components following an accident is required if at least one of the following conditions is present:

- The housing is visibly deformed or damaged.
- The support surface or console is deformed (the unit does not show any outward signs of damage).
- The plug connection is damaged or corroded due to moisture.
- Functional check or self-diagnosis of the unit displays the following fault:
  "Control unit faulty ".

If electronic components, e.g. the ABS control unit, have been removed when repairs are being carried out and if they are to be reused afterwards, the operation of the components must be checked after reinstallation according to the respective specifications.

Printed in Germany – XVI, 1992

HS steel body panels

The following body panels are made of high-strength steel (HS)!

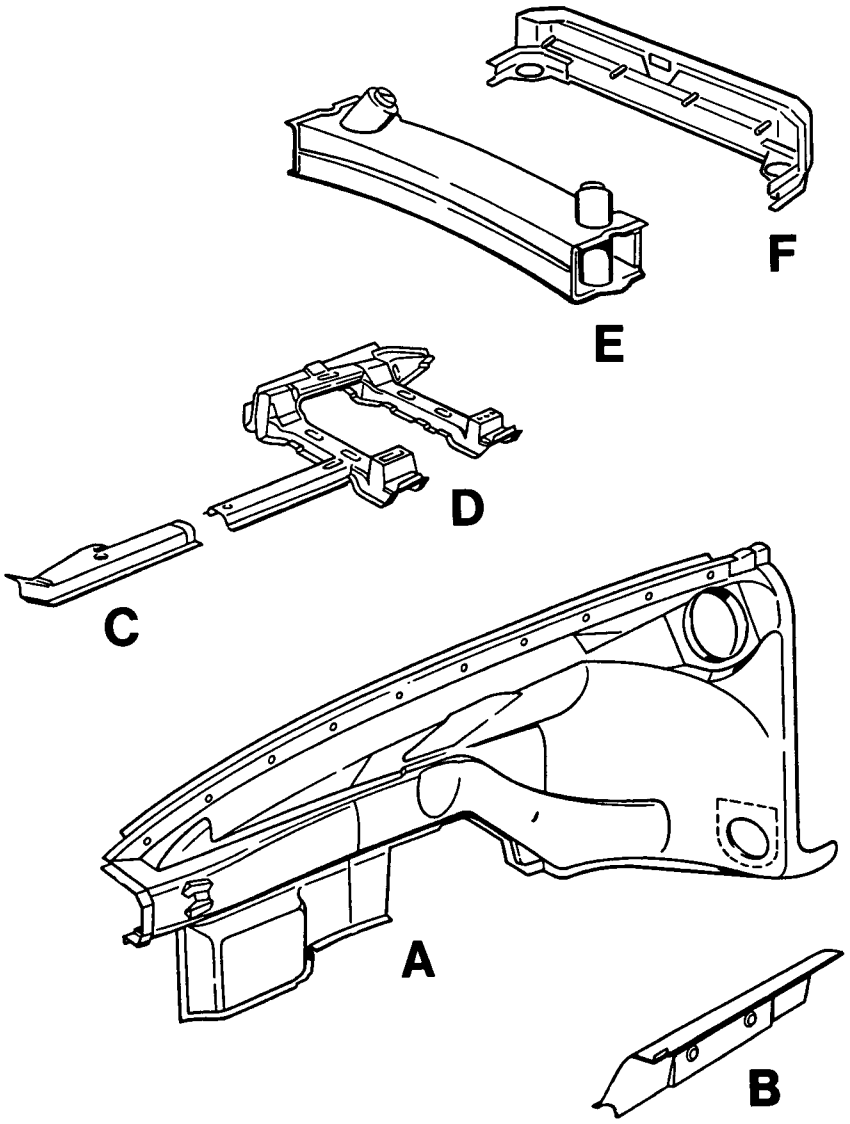

1322 - 50

A = Front wheel housing
B = Inner side member
C = Frontfloorsection member
D = Seat base
E = Rear-axle crossmember
F = Crossmember with engine mount

Printed in Germany – XVIII, 1992

General remarks on HS steel body panels

Applicable to 911 Carrera 2, 911 Carrera 4, 911 Carrera RS, 911 Turbo models:

The body panels made of high-strength steel (HS) help to increase the stiffness of the passenger compartment and thus provide additional passenger protection. In addition, the body panels retain their full fatigue strength, crash protection and corrosion resistance.

Crash tests have underlined the superior energy absorbing capacity of body panels made of high-strength steel. On the other hand, however, an increased force is required to bring the panels back into shape during straightening operations.

Note:

Cracks may occur during straightening!

Tempering processes have no impact on the material structure. Welding therefore does not cause any loss of strength in the panel.

Repair note:

If significant deformation in this type of body panels has occurred, they cannot be brought back into shape by straightening. Body repairs therefore require fitting of new panels and/or sectional repairs.

Printed in Germany – XVIII, 1992

Partially replacing front section

The following chassis parts are required for partial repair of the front section:

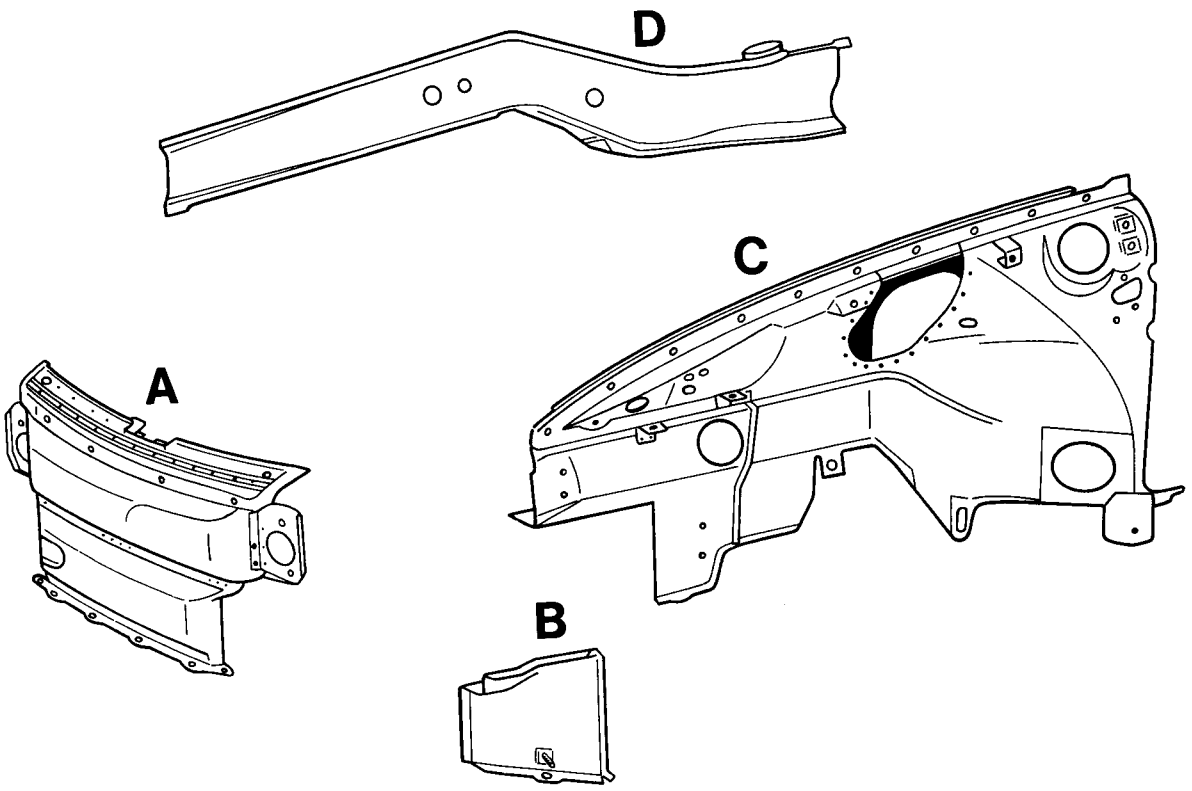

188 - 50

A End panel

B Connection plate

C Front wheel house

D Front side member

Printed in Germany – II,1989

Partially replacing front section

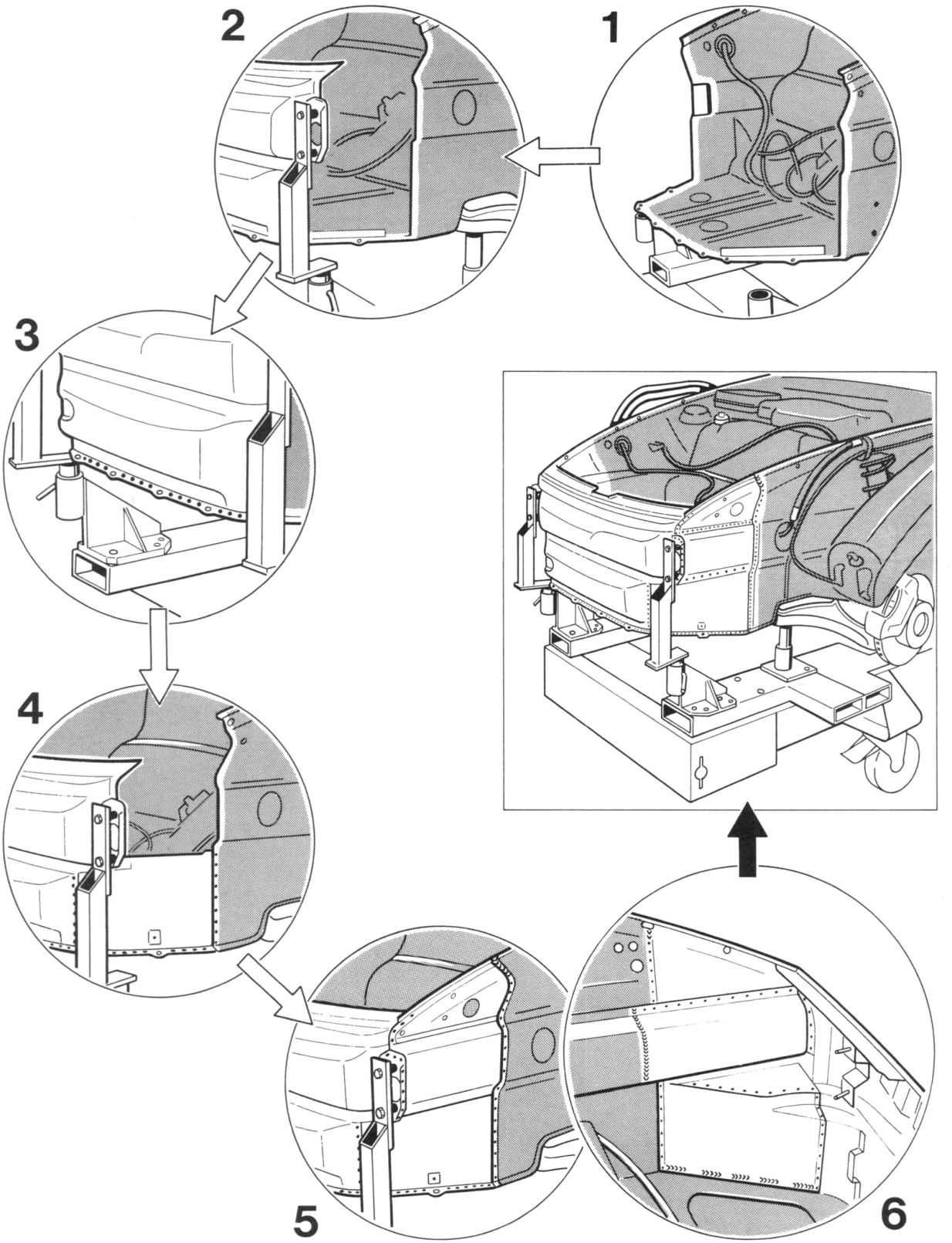

Printed in Germany – II,1989

Partially replacing front section

Replacing end panel and connection plate, partially replacing wheel house and side member.

No.	Procedure	Instructions
	Position vehicle on the alignment bench	Position vehicle, with units installed, on the rational straightening brackets and secure.
	Remove damaged parts from the chassis	Using chassis saw, weld-point miller and angled grinder, separate the damaged parts from the chassis.
1	Clean welding areas	Remove underseal from welding areas with hot-air blower or rotary brush.
2	Fasten end section to the straightening bracket	
3	Weld end section onto spare-wheel well	Align spare-wheel well with end section, secure with clamps and spot weld.
4	Weld in connection plate	Align connection plate, fasten to spare-wheel well, end section and wheel house with clamps and spot weld.
5	Weld in wheel house	Cut and align wheel house and side member. Offset wheel house to the outside and fasten to the chassis with clamps. Spot weld the wheel house to the end section. Using the saw, cut to fit the fender connection areas and butt weld.
6	Weld in side member and grind butt-weld joint smooth.	Align the side member with the wheel house in such a way that the ends connecting with the end sections form an offset to the seams of connection plate and wheel house. Butt weld side member and end sections. Spot weld side member, wheel house and end section. Grind butt-weld seams on side member smooth.

Printed in Germany – II,1989

Replacing Complete Front End of Car

Cutting Off Front End of Car Body

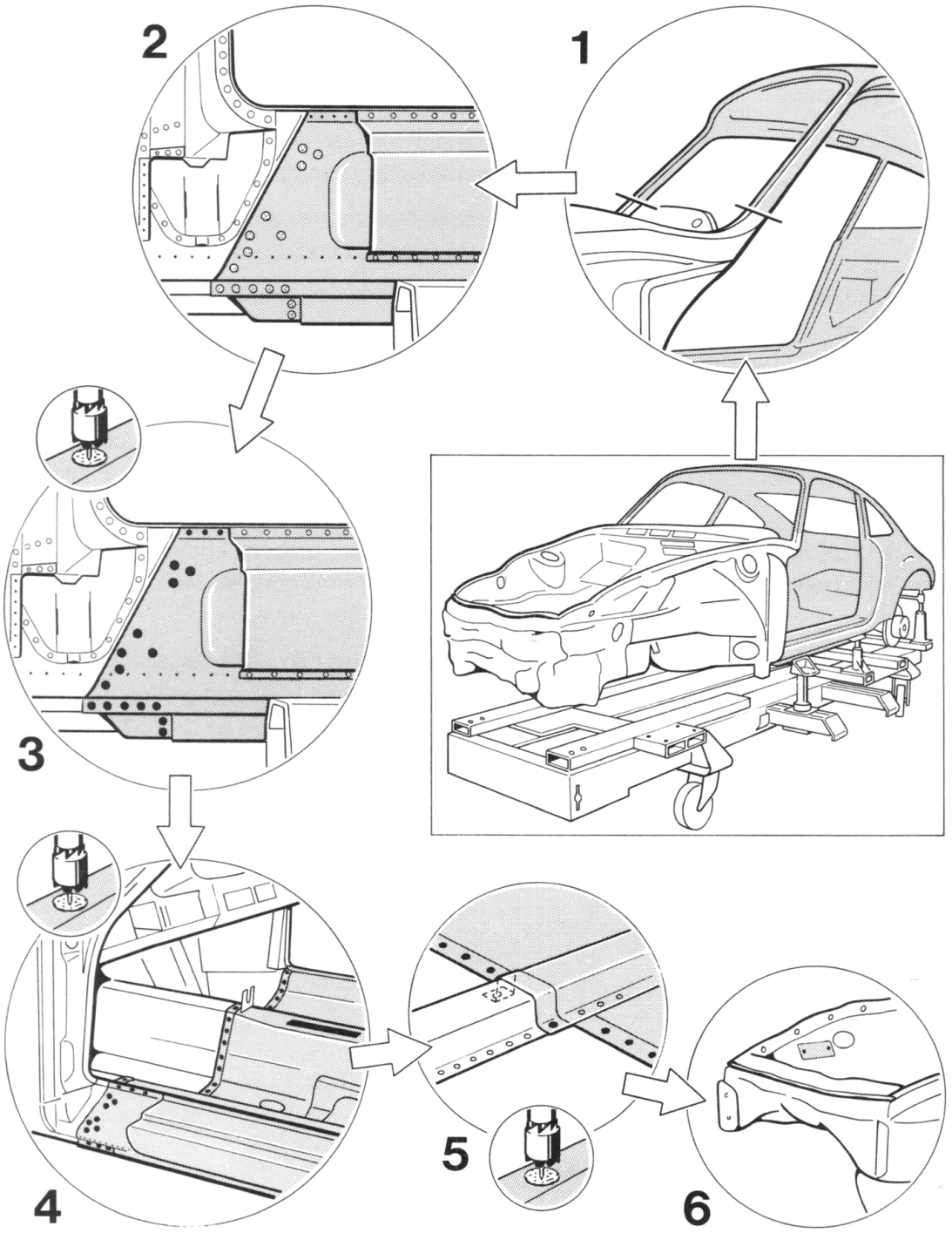

312 - 50

Printed in Germany – III,1989

Replacing Complete Front End of Car

Cutting Off Front End of Car Body

Remove all assemblies and attachments in and on the front end body section!

No.	Procedure	Instructions
	Set up car on straightening bench	Set up and mount car, with the rear-mounted units, on the rational straightening bracket set.
1	Cut through A-pillars	Cut through A-pillars with a body saw as close as possible to the front end body section.
2	Cut through entrance cover	Cut through outside of entrance cover up to the side member with a body saw and remove in area of side member to body and side member to front end body section spot welding connections.
3	Drill off welding spots of side member	Drill off welding spots between side member and body (inside and outside) as well as side member and front end body section with a welding spot cutter.
4	Drill off welding spots of floor plate assembly	Drill off welding spots between body floor plate and front end body section floor plate with a welding spot cutter.
5	Drill off welding spots of seat carrier	Drill off welding spots between body seat carrier and extension (on front end body section floor plate) with a welding spot cutter. Grind off inert gas welding seam between seat carrier and extension.
6	Remove data plate	Drill off rivets and remove data plate.

Printed in Germany – III,1989

Replacing Complete Front End of Car

The following body replacement parts and special tools are required for replacement of the complete "front end body section".

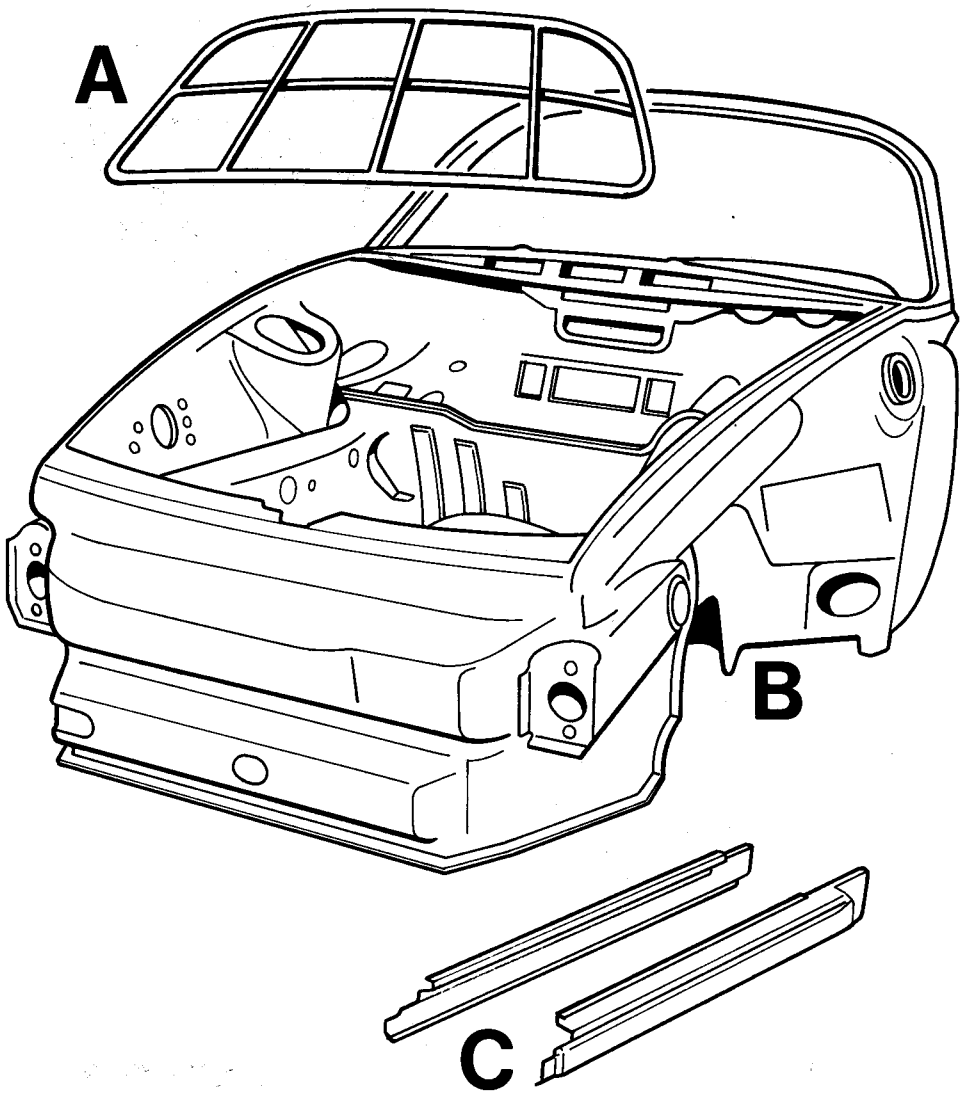

313 - 50

A = Special Tool P 852 *(gage for windshield opening in body)*

B = Front end body section

C = Eentrance cover

Printed in Germany – III,1989

Replacing Complete Front End of Car

Fitting Front End Body Section on Body

Printed in Germany – III,1989

Replacing Complete Front End of Car

Fitting Front End Body Section on Body

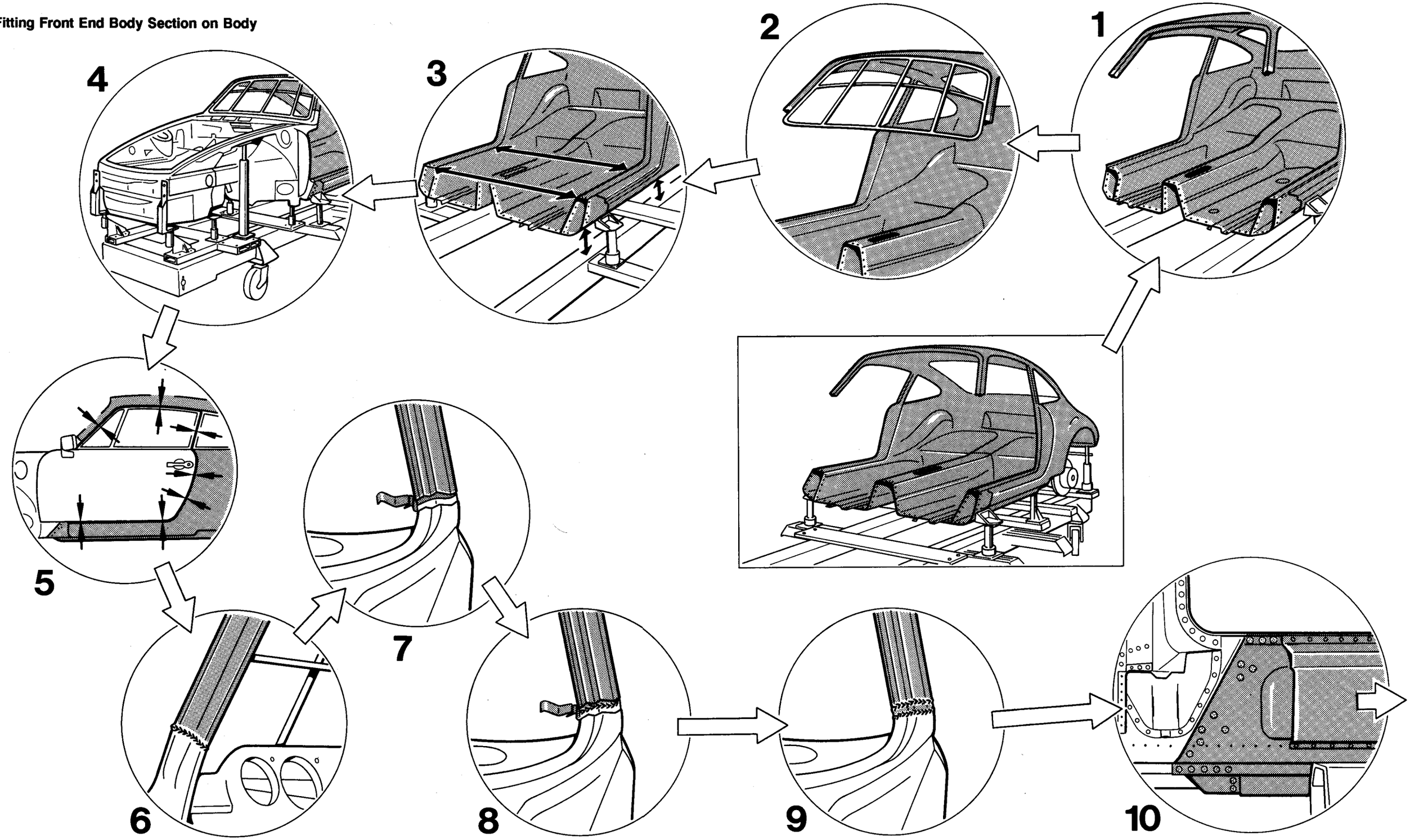

314 - 50

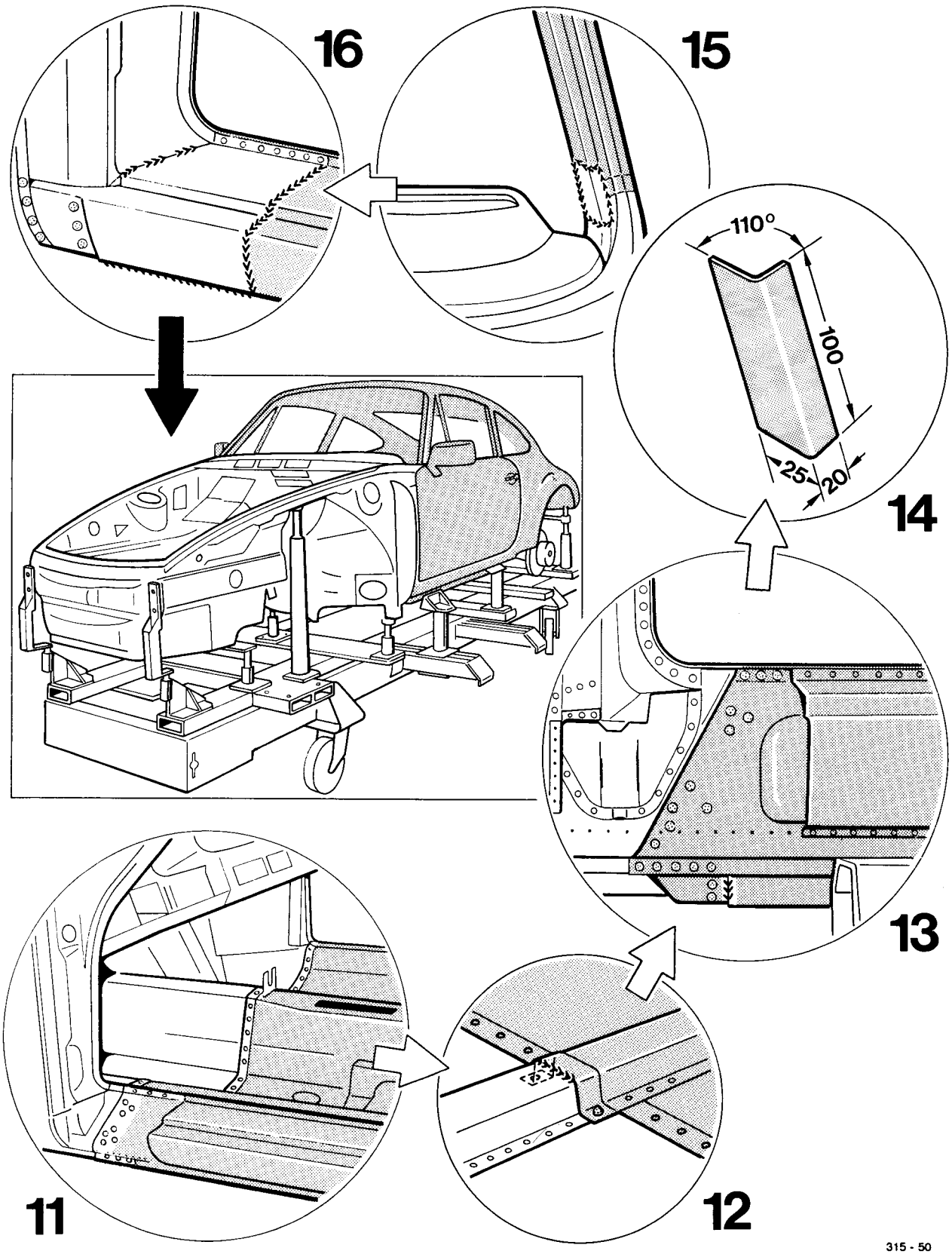

315 - 50

Printed in Germany – III,1989

Replacing Complete Front End of Body

Fitting Front End Body Section on Body

Remove factory-applied primer from all welding surfaces of the front end body section with a rotary brush!

No.	Procedure	Instructions
1	Clean welding surfaces of body	Clean welding surfaces on the body with a hot air blower or rotary brush to remove undercoating, paint, body cavity sealing compounds and residual cement.
2	Align A-pillars of body	Align A-pillars with help of Special Tool P 852 (gage for windshield opening in body) and prepare the mating surfaces for welding.
3	Align side members and floor plate of body	Align side members to be parallel to each other and parallel in height to the straightening bench. Prepare the entire floor plate assembly in the area of connection on the front end body section for welding.
4	Set up front end body section on straightening bench and fit on body	Set up front end body section on the straightening bench loosely. Place Special Tool P 852 in the body opening for the windshield. Fit front end body section on the body. Mount front end body section on the straightening brackets correctly.
5	Install doors to check total body contour with the front end body section	The gap between the door and entire body must be parallel all around. Remove doors again after checking.
6	Butt weld A-pillars in area of the door openings	Butt weld the joints between the A-pillar and body as well as A-pillar and front end body section in the door opening area with a solid welding seam from an inert gas welder, with Special Tool P 852 installed.
7	Open outside panels of A-pillars	Cut approx. 20 mm wide openings in the outside panels of A-pillars (body) and fold up outside panels to weld the inside panels.
8	Weld inside panels of A-pillars	Butt weld inside panels of A-pillars (body and front end body section) with a solid welding seam from an inert gas welder.

Printed in Germany – III,1989

No.	Procedure	Instructions
9	Close and weld outside panels of A-pillars	Close, straighten and inert gas weld outside panels of A-pillars with solid welding seams. Butt weld body A-pillars and front end body section A-pillars with solid welding seams from an inert gas welder. Grind down welding seams and install Special Tool P 852 to check the body opening for the windshield.
10	Plug weld front end body section side members with body side members	Align front end body section side members inserted in the body side members. Plug weld front end body section side members and body side members with an inert gas welder.
11	Plug weld front end body section floor plate with body floor plate	Align overlapping area of the body floor plate and front end body section floor plate. Plug weld front end body section floor plate and body floor plate with an inert gas welder.
12	Plug and solid seam weld body seat carrier with front end body section extension	Plug weld left and right collar on cap-profile of the body seat carrier on the front end body section extension with an inert gas welder. Inert gas weld face of the body seat carrier on the front end body section extension with a solid welding seam.
13	Inert gas weld floor plate in area of side members fromt underneath	Inert gas weld body floor plate on front end body section floor plate in area of the side members from underneath with a solid welding seam.
14	Produce reinforcement brackets for A-pillars	Produce one each reinforcement bracket made of 1.25 mm thick, galvanized sheet metal for the inside of left and right A-pillars.
15	Solid seam weld reinforcement brackets on A-pillars all around	Inert gas weld the reinforcement brackets above the welding seams on the insides of the A-pillars with welding seams all around to strengthen the welding. Grind down welding seams.
16	Weld in entrance covers	Fit in and tack weld entrance covers. Spot weld entrance covers on side members at top. Plug weld entrance covers on fender end plates with an inert gas welder. Inert gas weld entrance covers on A-pillar connection plates with interrupted solid welding seams. Inert gas weld entrance covers on side members at bottom with interrupted solid welding seams. Butt weld entrance covers on body entrance covers with inert gas welding solid welding seams. Grind down welding seams.

Printed in Germany – III,1989

End part replacement

The following end part is required as a spare part for body repairs:

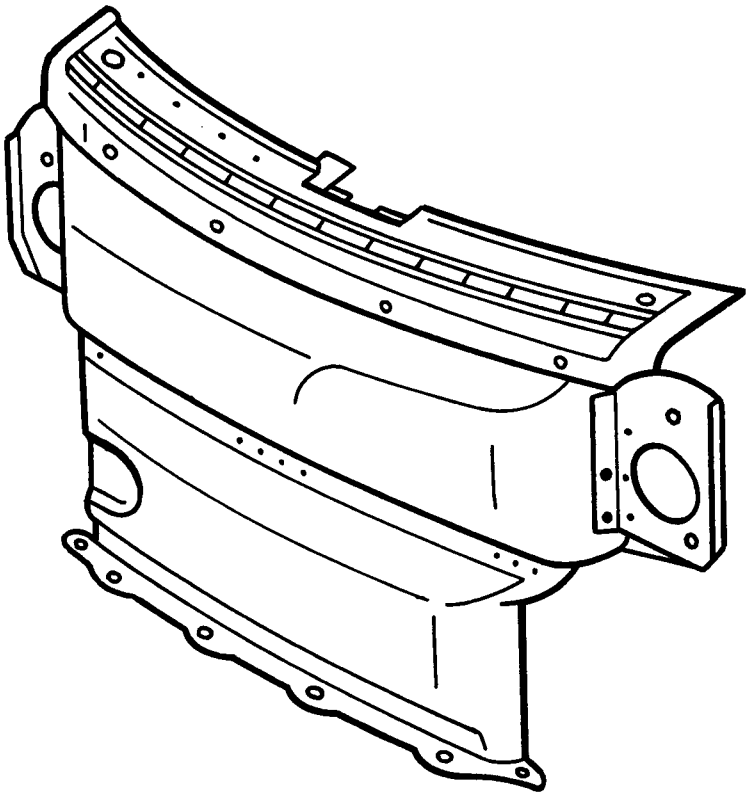

384 - 50

Printed in Germany – VI,1990

End part replacement

Cut end part out of body

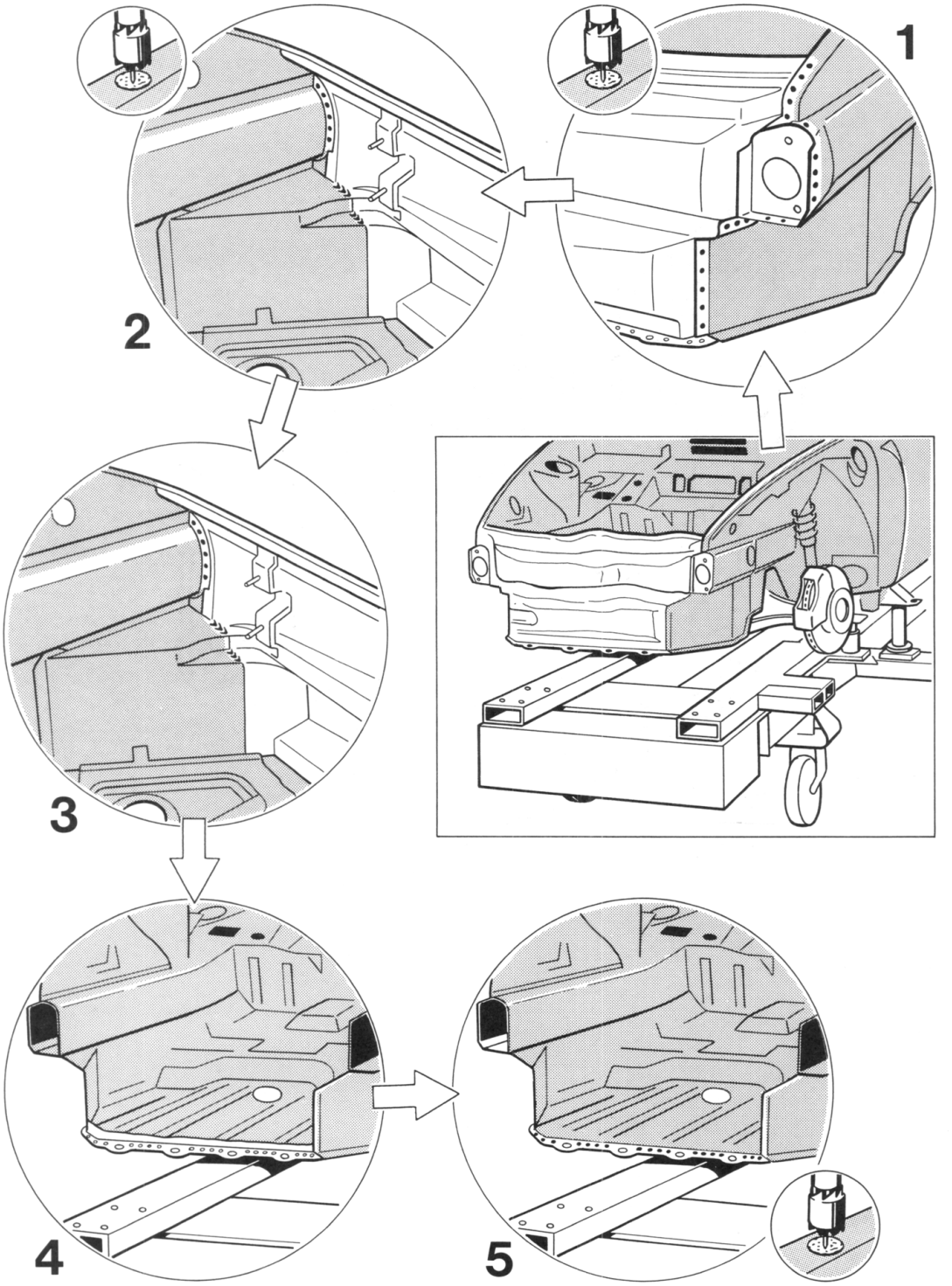

Printed in Germany – VI,1990

End part replacement

Cut end part out of body

No.	Work step	Instructions
	Place vehicle on the straightening bench	Place the vehicle with built-in assemblies on the rational straightening bracket set and secure.
1	Undo the spot weld joints of the end part to the wheel houses and the gusset plates	Undo the spot weld joints of the end part to the wheel houses and the gusset plates from outside using a spot weld milling cutter.
2	Undo the spot weld joints between end part/side member	Undo the spot weld joints of the end part to the side members from inside (trunk side) with the spot weld milling cutter.
3	Undo the weld joint between end part/gusset plates	Grind off the inert gas weld seams between the end part and gusset plates.
4	Cut out the end part above the spare wheel well	Cut off the end part above the spot weld joint between end part/spare wheel well with the bodywork saw and remove.
5	Undo the spot weld joint between end part/spare wheel well	Undo the spot weld joint of the end part to the spare wheel well from above with the spot weld milling cutter.

Printed in Germany – VI,1990

End part replacement

End part installation in the body

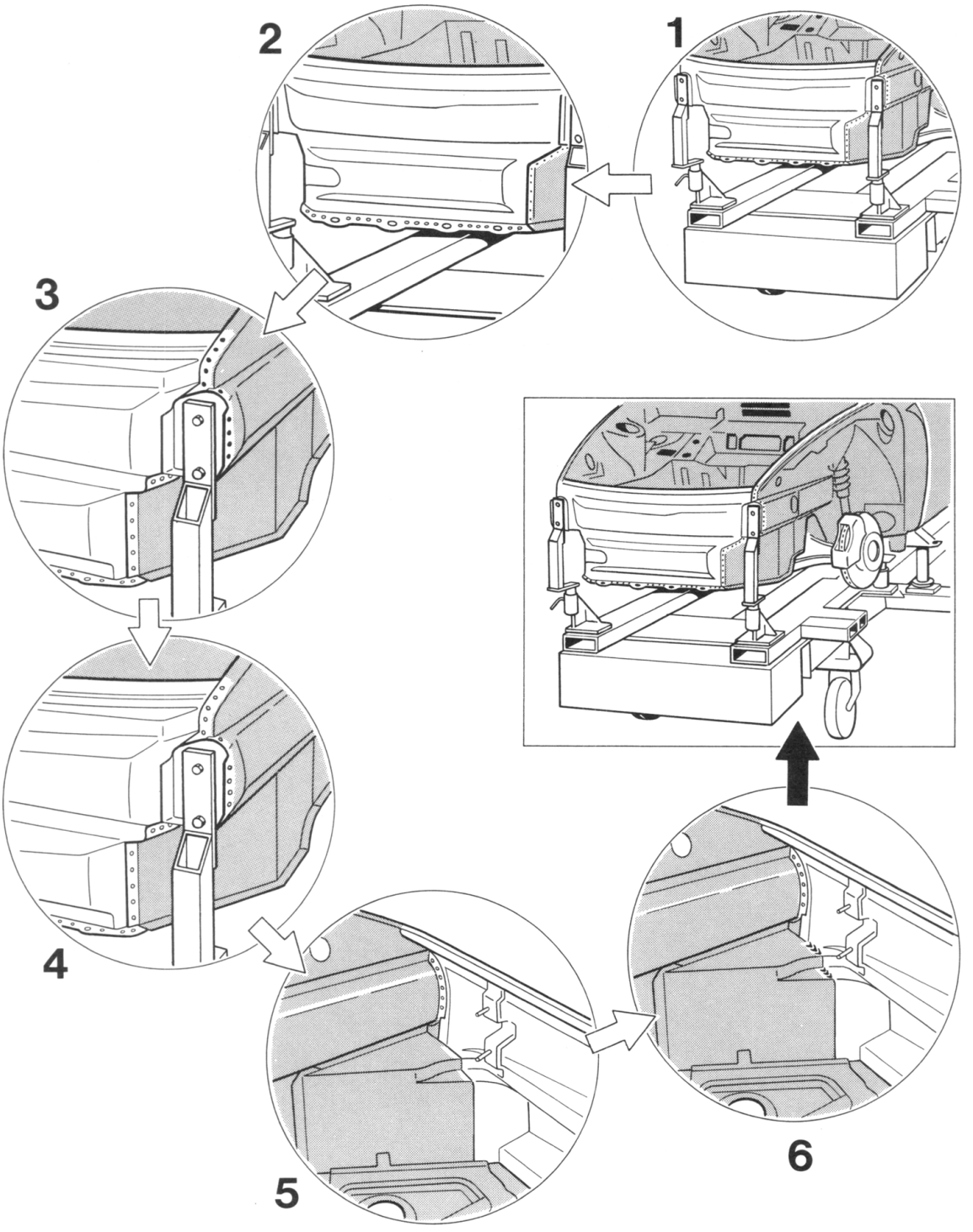

Printed in Germany – VI,1990

End part replacement

End part installation in the body

No.	Work step	Instructions
	Clean the welding areas	Clean underbody protection, paint etc. from the welding areas on the body using a hot-air blower or Roto- brush. Remove the primer coat applied at the works at the welding areas of the spare part (end part) with a Roto-brush.
1	Secure end part to the straightening brackets	Fit end part in the body and secure to the straightening brackets.
2	Spot weld the end part with the spare wheel well	Align the spare wheel well to the end part, secure with clamping tools and spot weld.
3	Plug weld the gusset plates with the end part	Align the gusset plates to the end part and plug weld with inert gas.
4	Plug weld the wheel houses with the end part	Align the wheel houses to the end part, secure with clamping tools and plug weld with inert gas
5	Plug weld side members with end part	Align the side members to the end part and plug weld with inert gas
6	Weld gusset plates with end part by means of inert gas shielded arc welding	Weld the gusset plates to the end parts (**only at the horizontal joint surfaces**) with full seam by means of inert gas shielded arc welding.

Printed in Germany – VI,1990

Partial replacement of wheel house and side member

The following body spare parts are required for repairs:

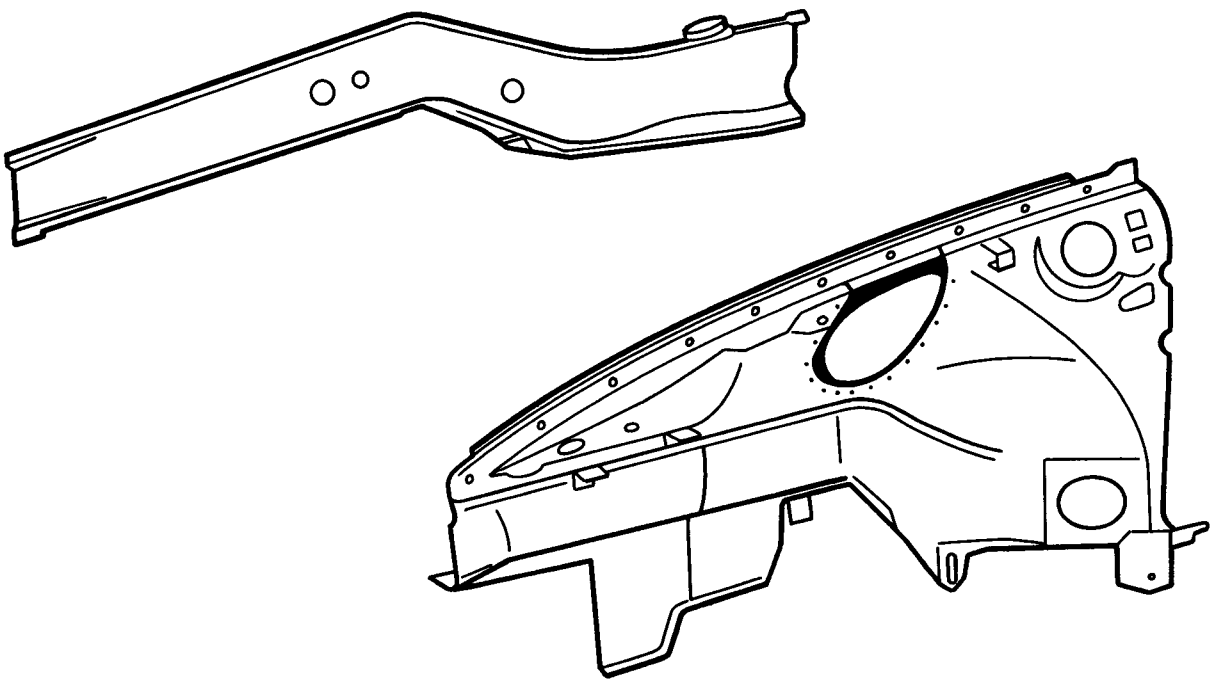

400 - 50

A Wheel house, front

B Side member, front

Printed in Germany – VI,1990

Partial replacement of wheel house and side member

Cut wheel house and side member out of body

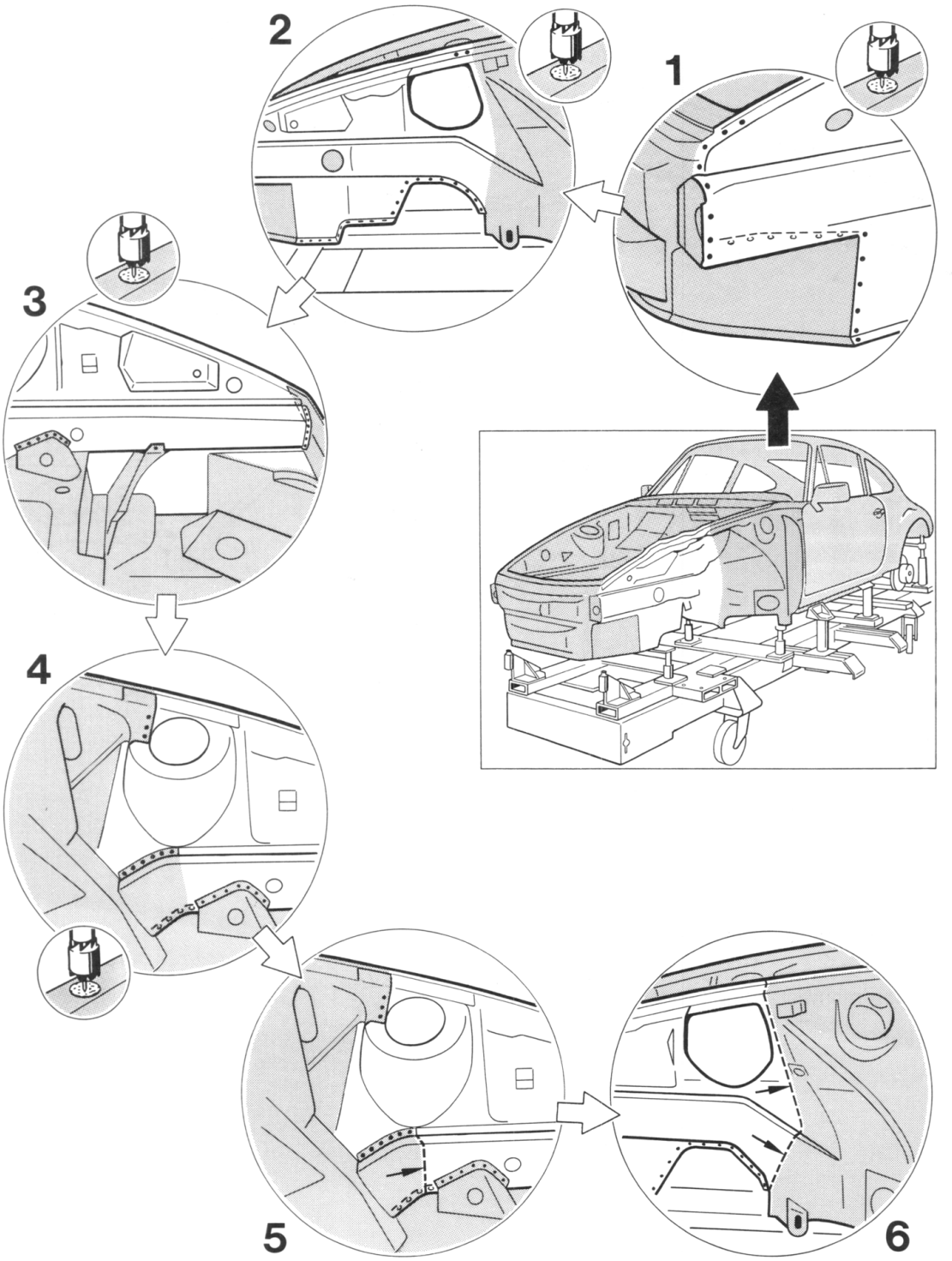

Printed in Germany – VI,1990

Partial replacement of wheel house and side member

Cut wheel house and side member out of body

No.	Work step	Instructions
	Place vehicle on straightening bench	Position vehicle with rear assemblies on the rational straightening bracket set and secure.
1	Undo the spot weld joints of the wheel house to the gusset plate and the end plate	Undo the spot weld joints of the wheel box to the gusset plate and end part from outside using a spot weld milling cutter.
2	Undo the spot weld joints of the wheel house to the spare wheel well, the bottom section at the front and to the support member	Undo the spot weld joints of the wheel house to the spare wheel well, the bottom section at the front and to the support member from outside using the spot weld milling cutter
3	Undo the spot weld joints of the side member to the end part, the cross member at the front and to the gusset plate	Undo the spot weld joints of the side member to the end part, the cross member at the front and the gusset plate from inside (trunk side) using the spot weld milling cutter.
4	Undo the spot weld joints side member/spring strut dome and spot weld joints support member/spring strut dome	Undo the spot weld joints of the side member to the spring strut dome and the spot weld joints of the support member to the spring strut dome from inside (trunk side) with the spot weld milling cutter.
5	Cut through side member	Cut through side member vertically approx. 10 mm behind the gusset plate using the bodywork saw.
6	Cut through wheel house	Cut through wheel house with the bodywork saw along the spring strut dome plate and remove. **Important: the support member must not be cut through.**

Printed in Germany – VI,1990

Partial replacement of the wheel house and side member

Installing the wheel house and side member in the body

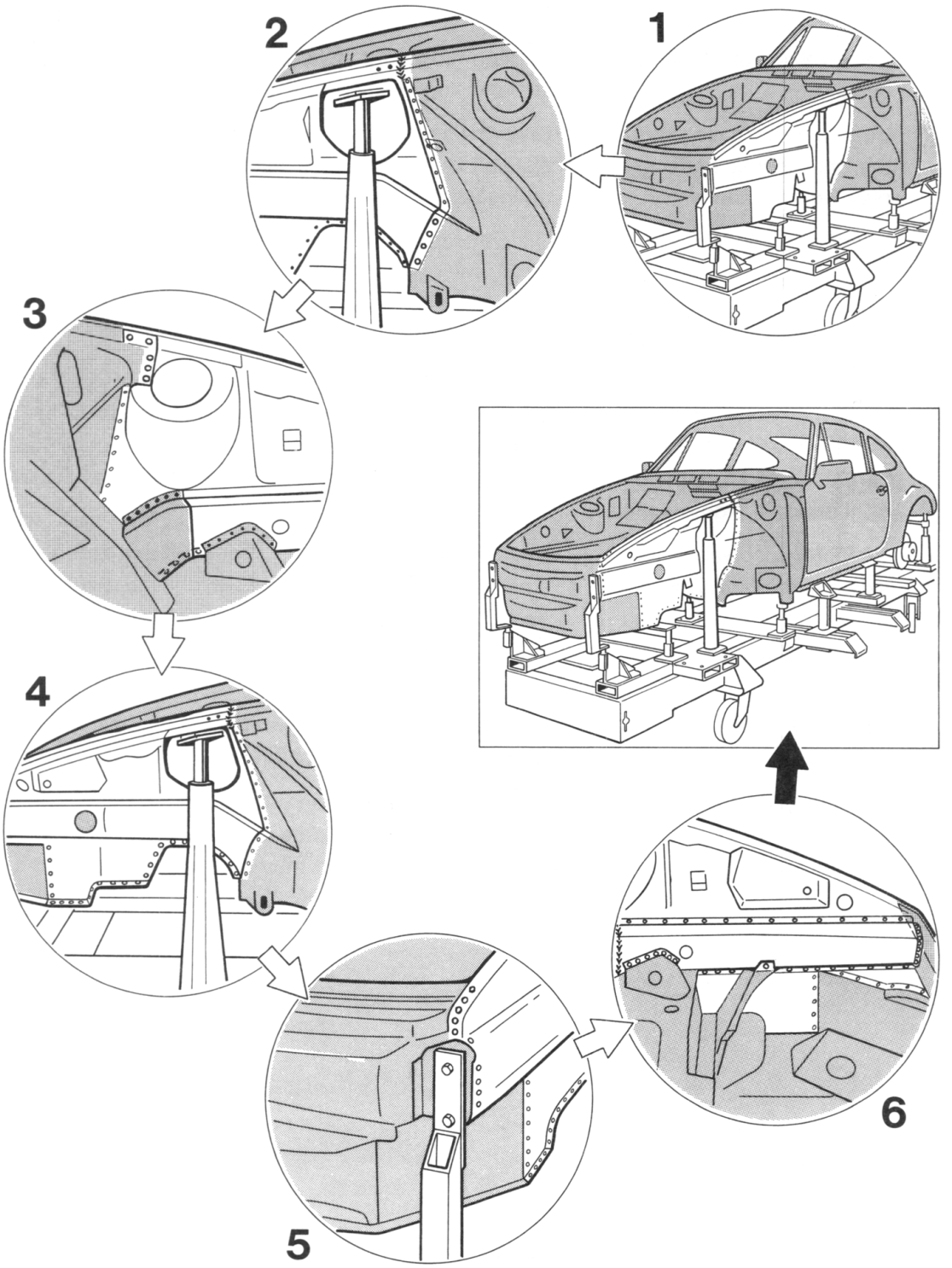

Printed in Germany – VI.1990

Partial replacement of the wheel house and side member

Installing the wheel house and side member in the body

No.	Work step	Instructions
	Clean welding areas	Using a hot-air blower or Roto-brush, clean underbody protection, paint etc. from the welding areas on the body. Remove the primer coat applied at the works at the welding areas of the spare parts (wheel house, side member) using a Roto-brush.
	Fit the wheel house in the body	Put down the wheel house (spare part) to the outside and adapt to the wheel house bodywork so that it overlaps. Fit the wheel house flush in the area of the fender connection surface.
1	Secure the wheel house to the straightening bracket	Secure the wheel house to the straightening bracket. Tack-weld the wheel house to the connection parts of the wheel house body, gusset plate and end part with inert gas.
2	Weld the wheel house to the wheel house body	Butt-weld the wheel house in the area of the fender connection surfaces with a full weld. Spot weld the wheel house with the support member. Spot weld the wheel house between the support member and side member. Plug weld the wheel house with inert gas as from side member area.
3	Plug weld the support member with spring strut dome	Secure the support member on the spring strut dome with clamping tools and plug weld with inert gas.
4	Spot weld the wheel house with bottom section, spare wheel well and gusset plate	Align the bottom section, front, and spare wheel well to the wheel house, secure with clamping tools and spot weld. Align the gusset plate to the wheel house and spot weld.
5	Spot weld the wheel house with end part	Align the end part to the wheel house, secure with clamping tools and spot weld.

Printed in Germany – VI,1990

No.	Work step	Instructions
6	Weld in side member	Fit the side member to the wheel house so that the joint between the side member spare part/side member body produces an offset with the seam of the wheel house/wheel house spare part. Butt-weld side member spare part and side member body with full seam using inert gas. Spot weld the side member with wheel house. Plug weld the cross member/side member and gusset plate/side member with inert gas. Align the side member to the end part and plug weld with inert gas.
	Grind butt-welded seams	Grind the butt-welded seam of the side member and the butt-welded seam of the wheel house in the area of the fender connection surface.

Printed in Germany – VI,1990

Partial replacement of the fender connection plate

The following fender connection plate is required as a spare part of body repairs:

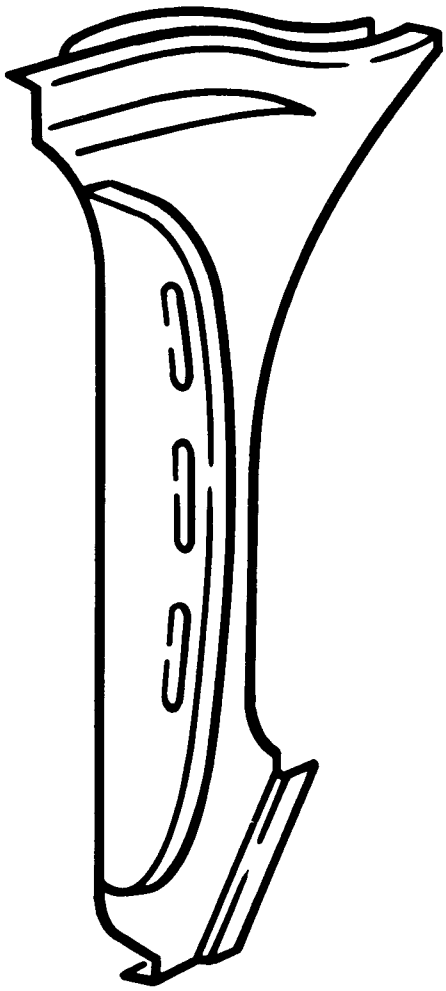

410 - 50

Printed in Germany – XI,1991

Partial replacement of the fender connection plate

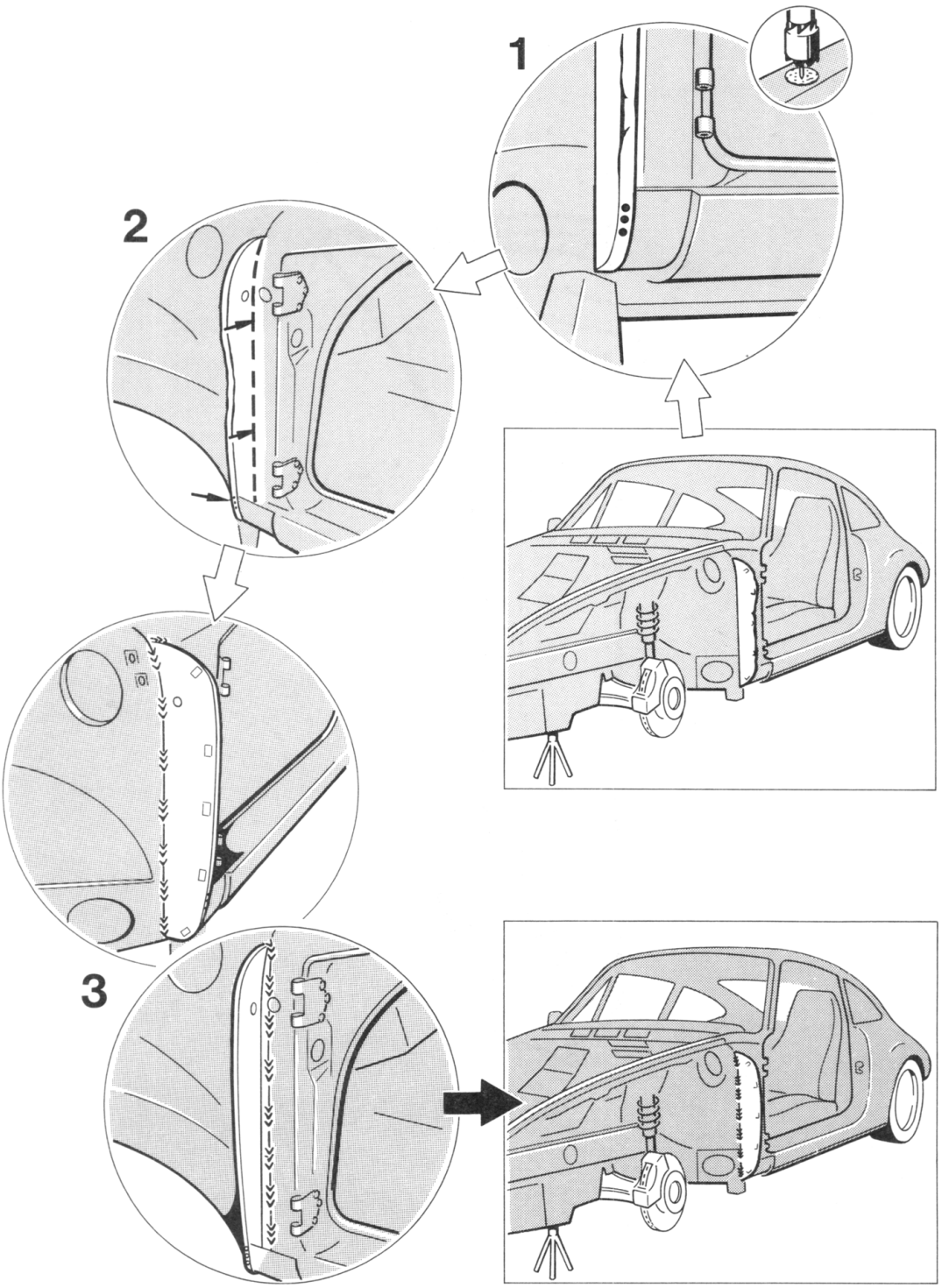

Printed in Germany – XI,1991

Partial replacement of the fender connection plate

Repair work on the body in this area must be completed before replacement of the fender connection plate.

No.	Work step	Instructions
1	Undo the spot weld joints of the fender connection plate to the entrance sill	Undo the spot weld joints of the fender connection plate to the entrance sill using a spot weld milling cutter.
2	Cut off fender connection plate	Remove the narrow web of the fender connection plate along the wheel house.
	Straighten and grind the separation area of the remaining fender connection plate on the body.	
	Prepare and adapt the fender connection plate	Trim the wide web of the fender connection plate to approx. 20 mm and adapt to the wheel house. Drill the fender connection plate in the area of the entrance sill for plug welding. Remove the primer coat applied at the works at the welding areas of the fender connection plate using a Roto-brush.
3	Weld on the fender connection plate	Secure the fender connection plate to the wheel house on both sides with an interrupted full seam by means of inert gas shielded are welding. Plug weld the fender connection plate and entrance sill with inert gas.

Printed in Germany - VI,1990

Partially replacing door sill with side member and floor pan

The following body spare parts are required for this sectional repair:

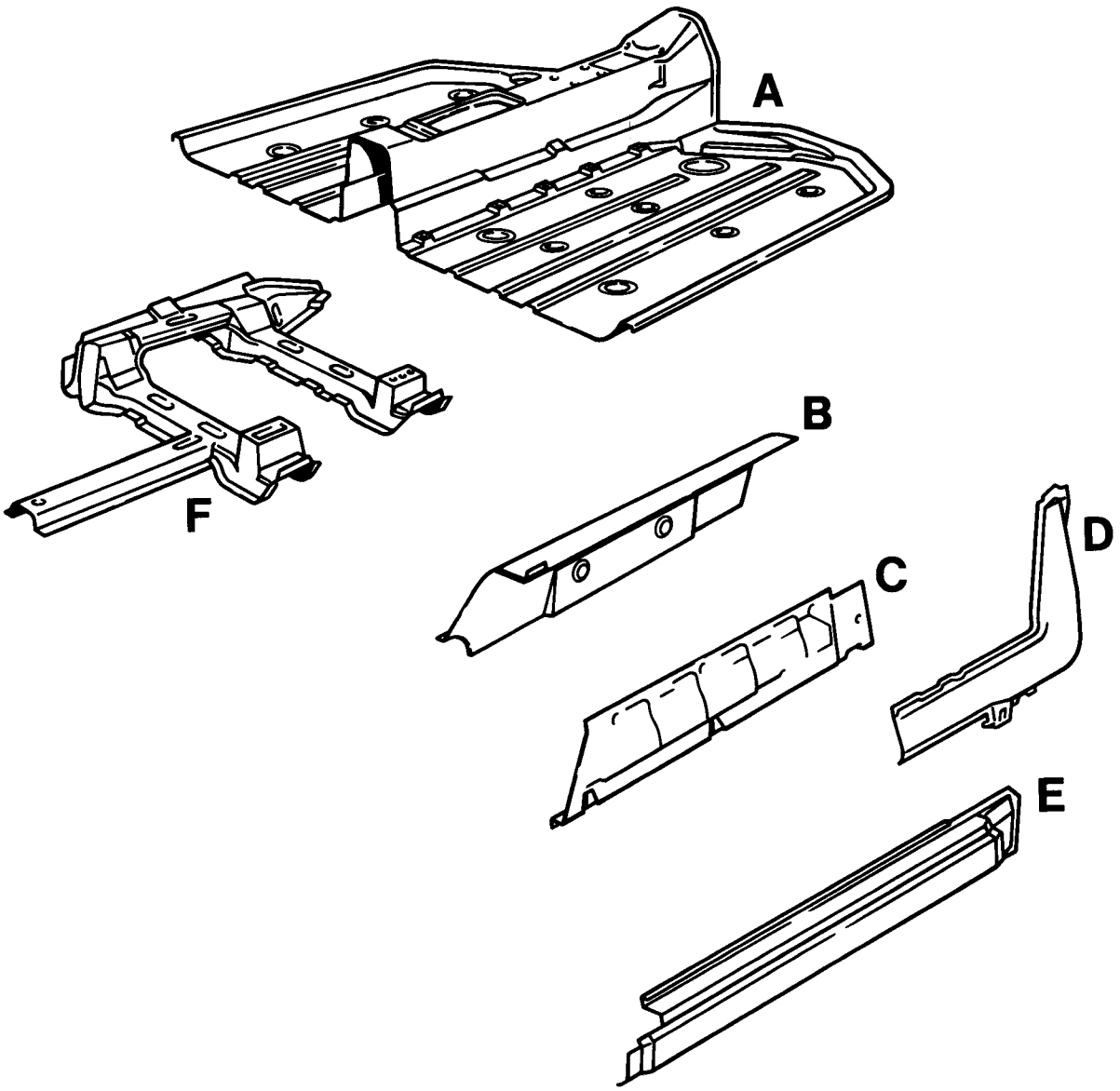

A = Floor pan
B = Side member, inner
C = Side member, outer
D = Gusset plate
E = Door sill
F = Seat base

Printed in Germany – XI, 1991

Partially replacing door sill with side member and floor pan

Partially cutting door sill with side member and floor pan from body shell

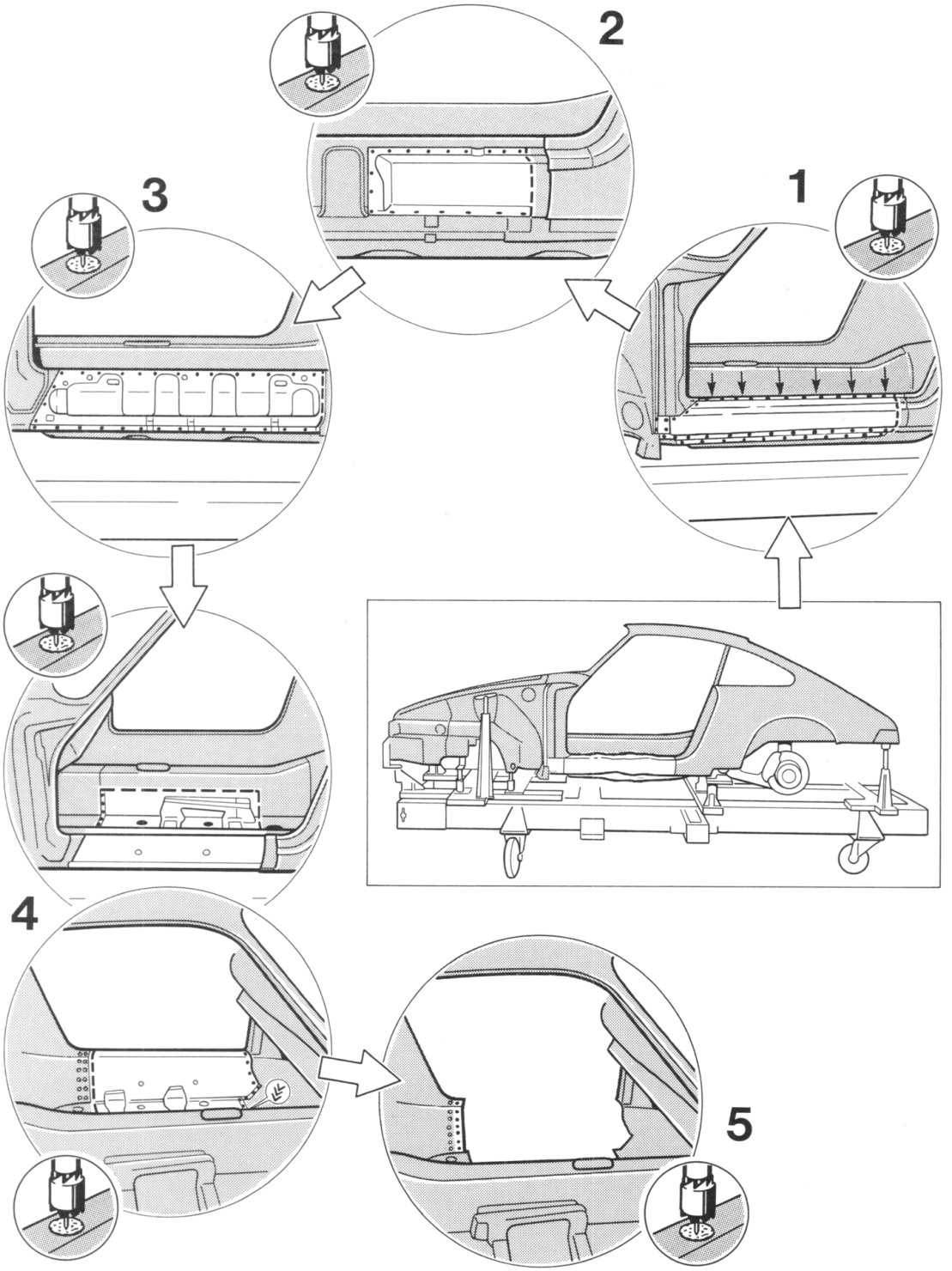

Printed in Germany – XI, 1991

Replacing part of door sill complete with side member and floor panel

Cutting part of door sill complete with side member and floor panel out of body

Remove all components and accessories, including the interior, from center body area as well as front fenders!

No.	Operation	Instructions
	Place vehicle on straightening equipment	Place vehicle onto attachment set – **not the economy set of straightening attachments.**
1	Cut through door sill and separate spotwelds	Using a body saw, cut through door sill ahead of rear quarter panel. Use a spotweld cutter to separate the spotwelds between the door sill and inside of side member, outside of side member, fender mating panel as well as closing panel.
2	Cut through gusset plate and separate spotwelds	Using a body saw, cut through gusset plate ahead of rear quarter panel. Use a spotweld cutter to cut spotwelds between gusset plate and inside of side member as well as quarter panel.
3	Cut through outside of side member and separate spotwelds	Using a body saw, cut through outside of side member ahead of rear quarter panel. Use a spotweld cutter to separate spotwelds between outside of side member and floor panel, inside of side member as well as front quarter panel.
4	Cut through inside of side member, floor panel and tunnel. Separate spotwelds	Cut through inside of side member ahead of rear side member, floor panel behind seat base and floor at tunnel, using a body saw. Grind away MIG seam between seat base and extension. Separate spotwelds between inside of side member and front part of side member, between floor panel center and front floor as well as between center of tunnel and front of tunnel using a spotweld cutter.
5	Separate spotwelds of inside of side member / rear of side member	Separate spotwelds between inside of side member and rear of side member, using a spotweld cutter. Take out remaining side member section.

Printed in Germany – XVI, 1992

Replacing part of door sill complete with side member and floor panel

Fitting part of door sill complete with side member and floor panel into body

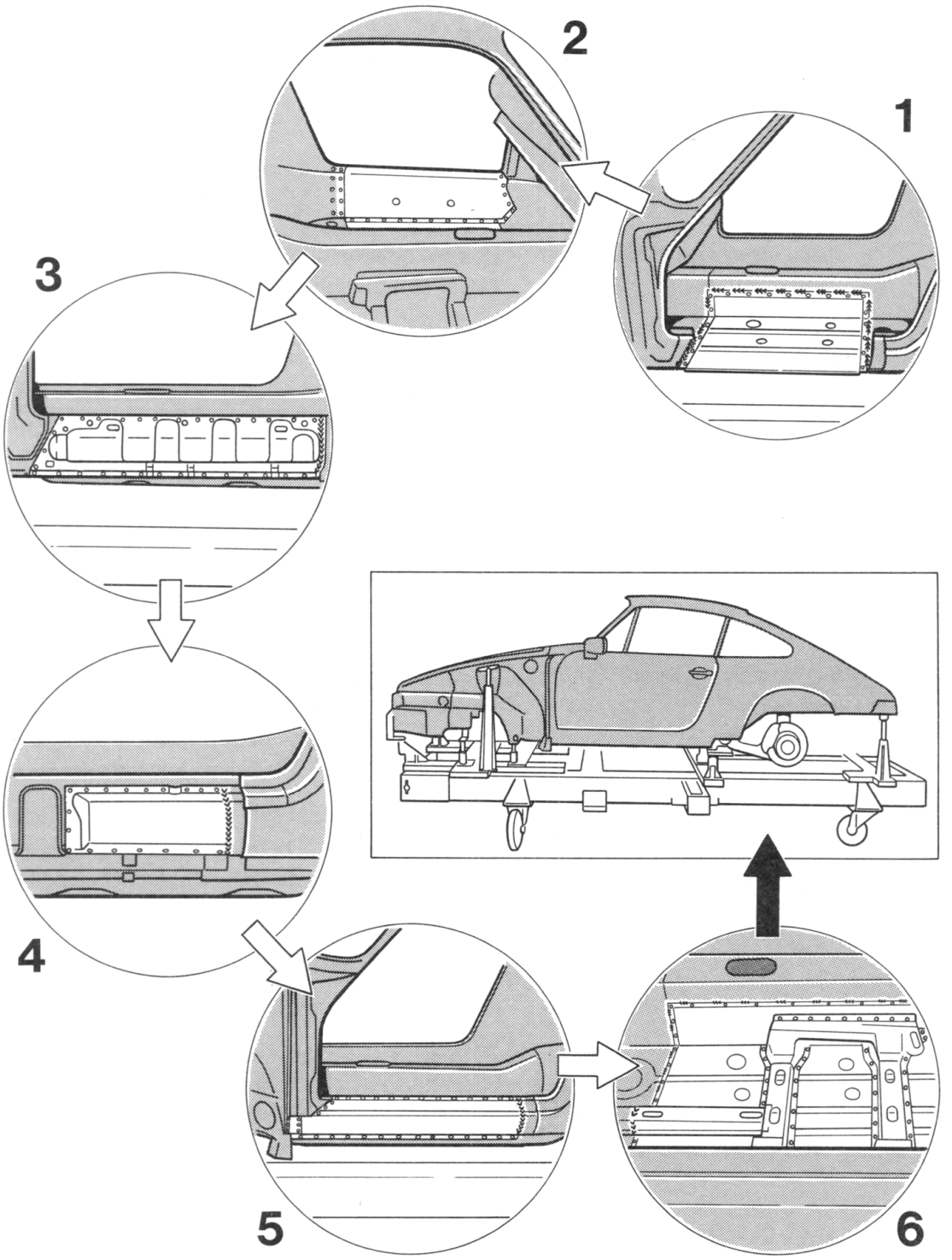

Printed in Germany – XVI, 1992

Partially replacing door sill with side member and floor pan

Partially fitting door sill with side member and floor pan into body shell

No.	Procedure	Instructions
	Perform straightening operations and adjust body shell with straightening brackets	Perform all straightening operations on the body shell. Adjust body shell with straightening brackets. Fit door to check body contours. Make sure the gap between door and body is parallel throughout.
	Clean welding areas	Remove underbody sealant, paint etc. from welding areas using a hot air gun or rotary brush. Remove factory primer from welding areas of the new spare parts using a rotary brush.
	Trial-fit floor pan into body shell and prepare for welding	Fit spare floor pan into body shell so that it overlaps in the areas adjacent to the rear of the floor and the tunnel. Joddle spare floor pan in those areas to the inside. Drill spare floor pan for plug welding.
1	Weld floor pan to body shell	Locate floor pan using welding clamps. Plug weld spare floor pan to rear of floor pan, tunnel and front of floor pan using MIG welding equipment. MIG weld overlapping areas between spare floor pan and rear of floor pan, tunnel and front of floor pan, running an intermittent full weld.
	Prepare inner side member for fitting into body shell	Drill inner side member along the mating areas to the front side member and floor pan for plug welding.
2	Trial-fit inner side member into body shell and MIG weld	Fit inner side member into body shell and adjust according to body and seat base contours. Plug weld inner side member with front side member, rear side member and floor pan using MIG welding equipment.
	Trial-fit outer side member into body shell and prepare for fitting	Adjust spare outer side member to outer body-mounted side member until a smooth butt joint is achieved. Drill outer side member along the mating area of the front side section for plug welding.

Printed in Germany – XI, 1991

No.	Procedure	Instructions
3	Weld in outer side member	Locate spare outer side member with suitable clamps and butt weld to outer body-mounted side member, running a full weld and using MIG welding equipment. Plug weld outer side member to front side member using MIG equipment. Spot weld outer side member to floor pan and inner side member.
4	Trial-fit gusset plate, prepare for fitting and weld in place	Trial-fit spare gusset plate to body-mounted gusset plate so that a butt joint is obtained. Drill gusset plate along the mating area to the outer side member for plug welding. Butt weld spare gusset plate to body-mounted gusset plate, running a full weld and using MIG equipment. Plug weld gusset plate to outer side member using MIG equipment.
	Trial-fit door sill into body shell and prepare for fitting	Trial-fit spare door sill to body-mounted door sill so that a butt joint is obtained. Drill door sill in the mating areas to the fender plate, closing plate and outer side member for plug welding.
5	Weld door sill in place	Fit door sill into body shell and adjust according to the door contours. Butt weld spare door sill to body-mounted door sill, running a full weld and using MIG equipment. Plug weld door sill to outer side member, fender plate and closing plate using MIG equipment. Spot weld door sill to inner side member and outer side member.
	Grind down butt weld	
6	Prepare seat base for fitting and weld in place	Drill seat base along the spot weld flanges for plug welding. Plug weld seat base to floor pan, tunnel and inner side member using MIG equipment. MIG weld seat base with extension, running an intermittent full weld.

Printed in Germany – XI, 1991

Replacing part of door sill complete with side member

For this sectional repair, the following spare parts are required:

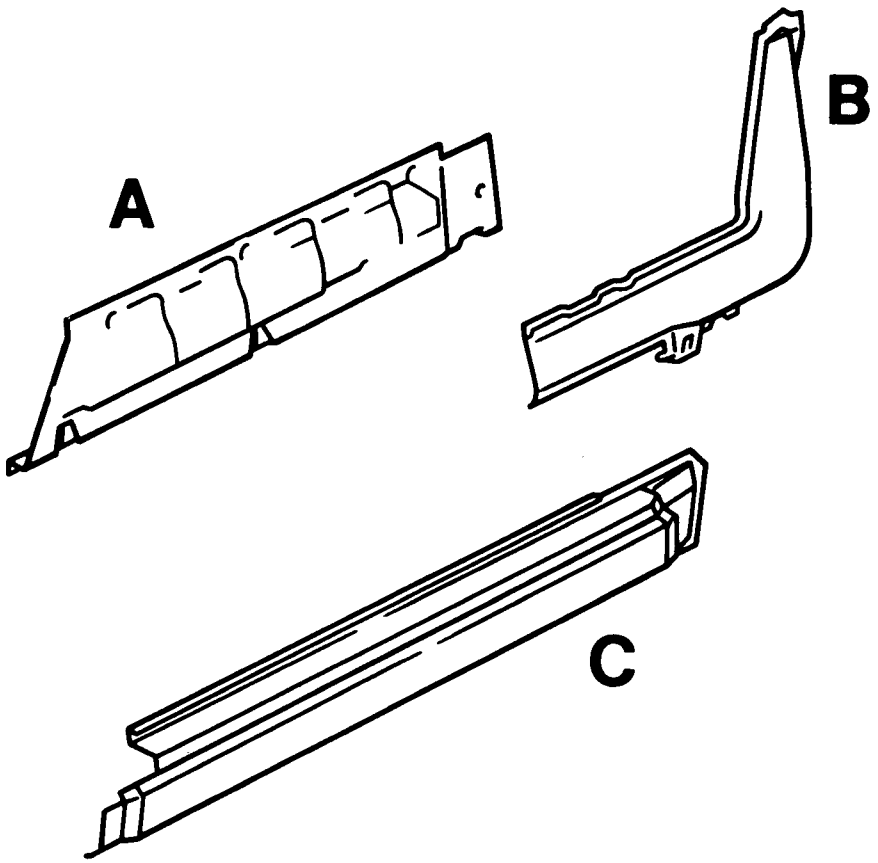

708 - 51

A = Side member, outside
B = Gusset plate
C = Door sill

Printed in Germany – XVI, 1992

Replacing part of door sill complete with side member

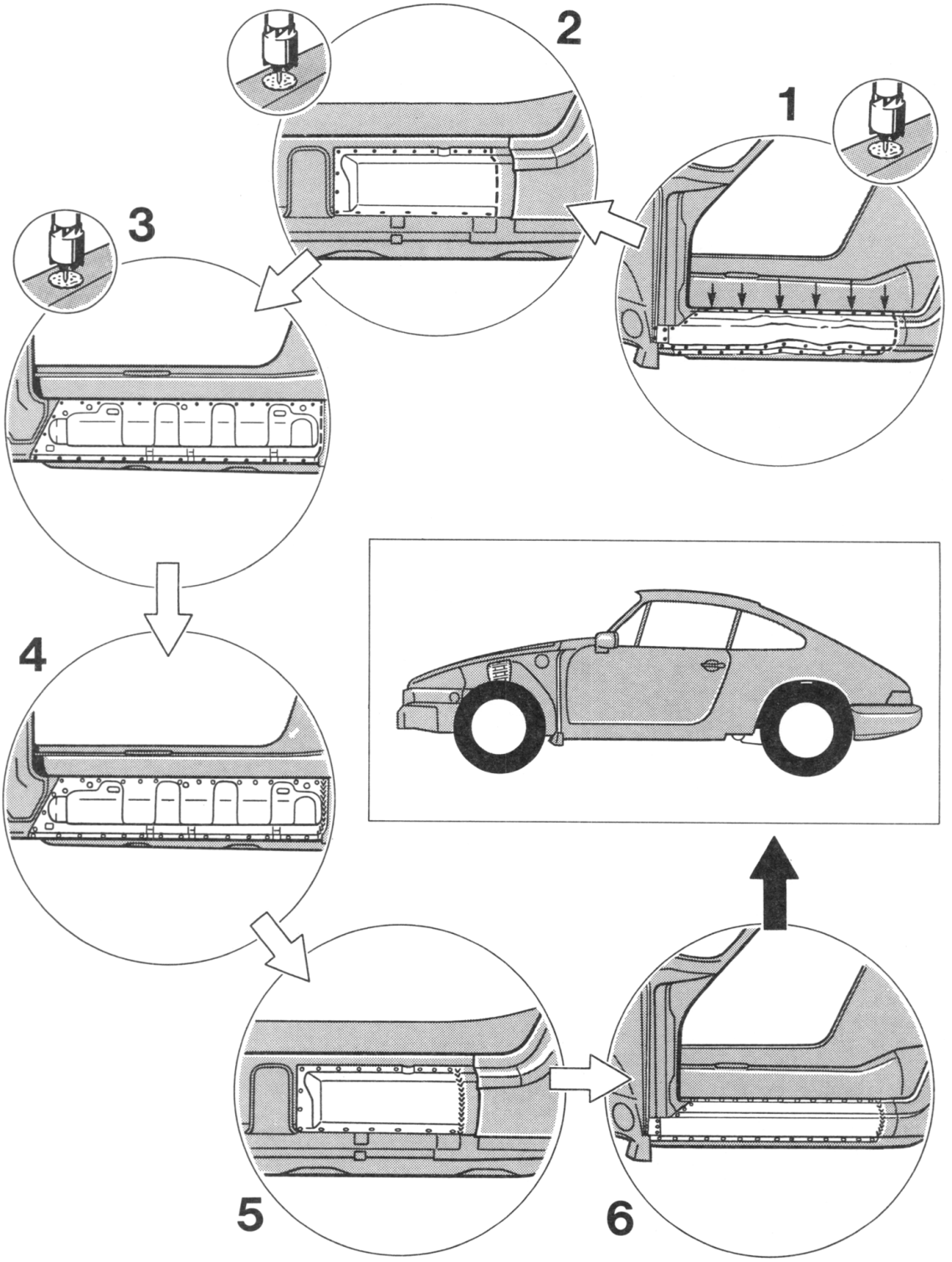

Printed in Germany – XVI, 1992

Partially replacing door sill with side member

Remove components and interior in the center section of the body shell as well as the front fender area!

No.	Procedure	Instructions
1	Cut through door sill and separate spot welds	Cut door sill ahead of the rear side section using a body saw. Separate spot welds between door sill and inner side member, outer side member, fender plate and closing panel using a spotweld cutter.
2	Cut through gusset plate and separate spot welds	Cut gusset plate ahead of the rear side section using a body saw. Separate spot welds between gusset plate and side member as well as side section using a spot-weld cutter.
3	Cut through outer side member and separate spot welds	Cut side member ahead of the rear side section using a body saw. Separate spot welds between outer side member and floor pan, inner side member as well as front side section using a spotweld cutter.
	Clean welding areas	Remove underbody sealant, paint etc. from welding areas of the body shell using a hot air gun or rotary brush. Remove factory primer from welding areas of spare parts using a rotary brush.
	Trial-fit outer side member into body shell and prepare for fitting	Trial-fit outer spare side member to outer body-mounted side member so that a butt joint is obtained. Drill outer side member at the mating area to the front side section for plug welding.
4	Weld in outer side member	Locate spare outer side member with suitable clamps and butt weld to outer body-mounted welding side member, running a full weld and using MIG equipment. Plug weld outer side member with front side section using MIG equipment. Spot weld outer side member to floor pan and inner side member

Printed in Germany – XI, 1991

No.	Procedure	Instructions
5	Trial-fit gusset plate, prepare for fitting and weld in place	Trial-fit spare gusset plate to body-mounted gusset plate so that a butt joint is obtained. Drill gusset plate at the mating area to the outer side member for plug welding. Butt weld spare gusset plate to body-mounted gusset plate, running a full weld and using MIG equipment. Plug weld gusset plate with outer side member using MIG equipment.
	Trial-fit door sill to body shell and prepare for fitting	Trial-fit spare door sill to body-mounted door sill so that a butt joint is obtained. Drill door sill along the mating areas for fender plate, closing plate and outer side member for plug welding.
6	Weld door sill in place	Fit door sill to body shell and adjust according to door contours. Butt weld spare door sill to body-mounted door sill running a full seam and using MIG equipment. Plug weld door sill to outer side member, fender plate and closing plate using MIG equipment. Spot weld door sill to inner side member and outer side member.
	Grind down butt weld	

Printed in Germany – XI, 1991

Replacing door sill

The following body spare part is required for the "Replacing door sill" repair operation:

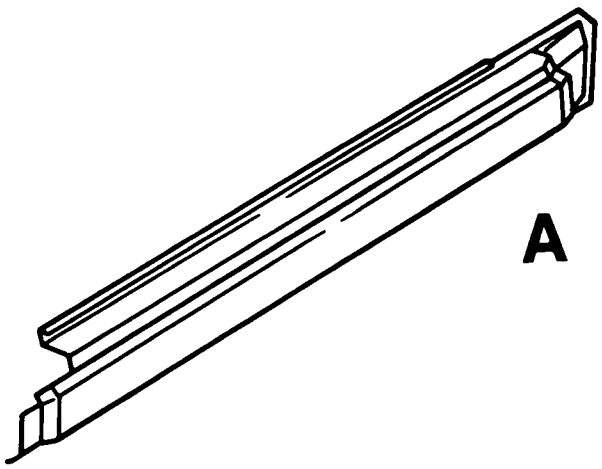

A = Door sill

Printed in Germany – XI, 1991

Replacing door sill

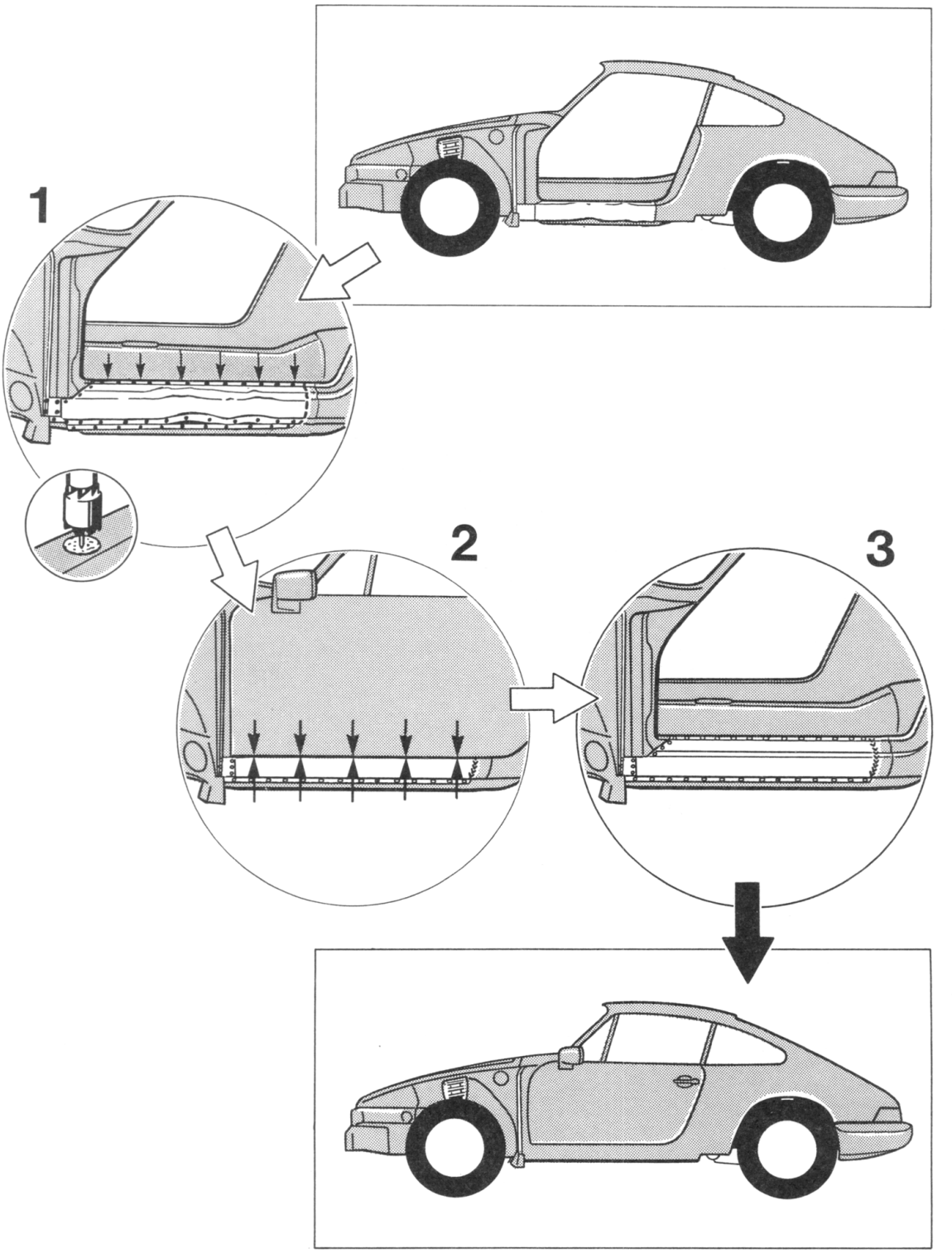

Printed in Germany – XI, 1991

Replacing door sill

Remove components and interior in the door sill as well as front fender areas!

No.	Procedure	Instructions
1	Cut through door sill and separate spot welds	Cut door sill ahead of the rear side section using a body saw. Separate spot welds between door sill and inner side member, outer side member, fender plate as well as closing plate using a spotweld cutter.
	Clean welding areas	Remove paint, underbody sealant etc. from welding areas of the body shell with a hot air gun or rotary brush. Remove factory primer from welding areas of spare part using a rotary brush.
2	Trial-fit door to body shell and prepare for fitting	Trial-fit spare door sill to body-mounted door sill so that a butt joint is obtained. Drill door sill at the mating areas to fender plate, closing plate and outer side member for plug welding. Fit door sill to body shell and adjust according to the door contours.
3	Weld in door sill	Butt weld spare door sill to body-mounted door sill, running a full weld and using MIG equipment. Plug weld door sill to outer side member, fender plate and closing plate using MIG equipment. Spot weld door sill to inner side member and outer side member.
	Grind down butt weld	

Printed in Germany – XI, 1991

Replacing the complete roof

Cutting roof panel and quarter panels from body

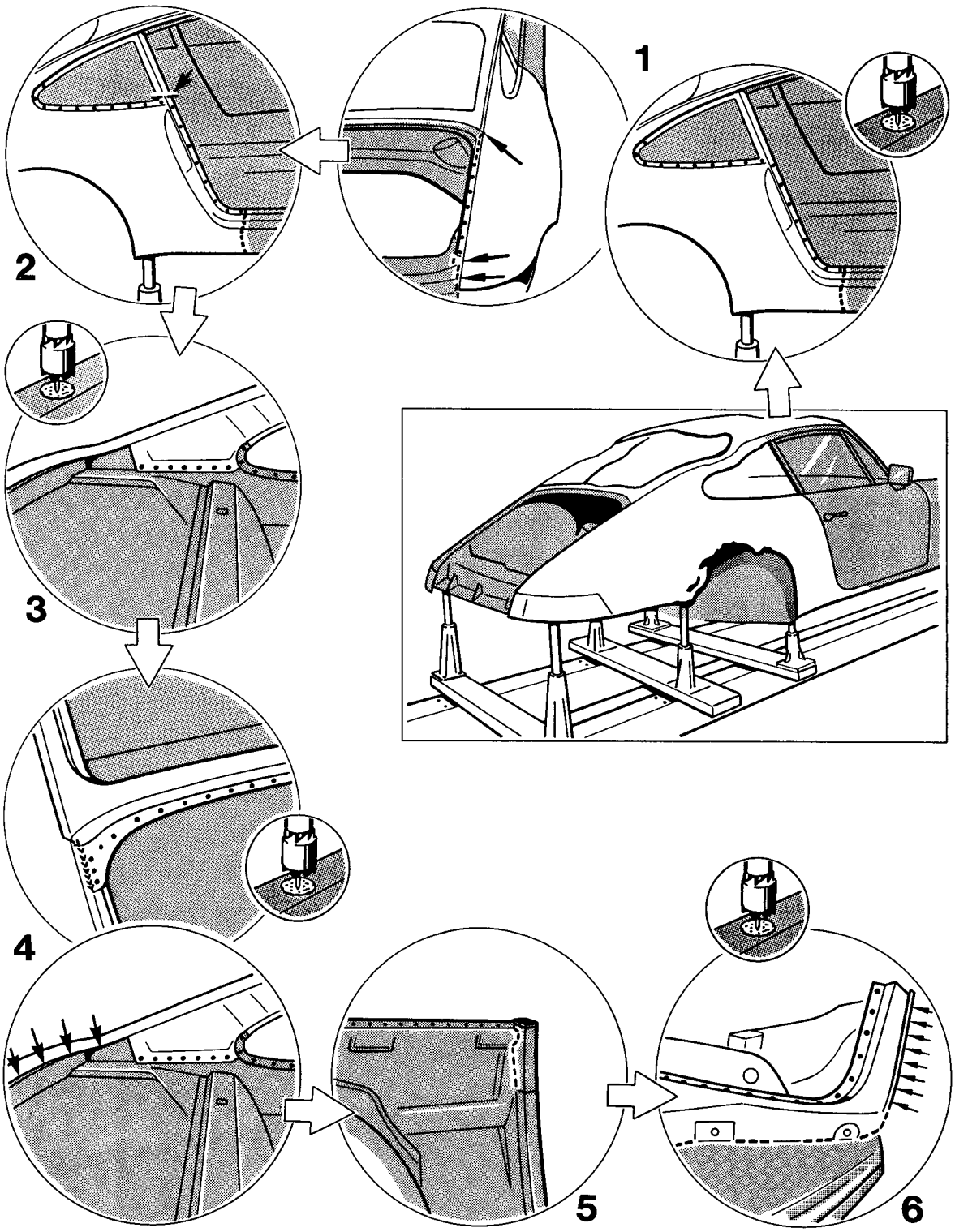

Printed in Germany – XIII, 1991

Replacing the complete roof

Cutting roof panel and quarter panels from body

Remove assemblies and accessories as well as complete interior equipment including all body glass!

Body straightening operations must be completed before the roof is replaced!

No.	Operation	Instructions
	Set up vehicle on straightening equipment	Set up vehicle with fitted front-end assemblies on straightening attachments set and tighten vehicle.
1	Separate spotwelds at quarter panel	Separate spotwelds between quarter panel and inner side panel using a spotweld cutter. Separate MIG weld seams between quarter panel and door sill, roof sheet/inner side panel and crossmember.
	Separate brazed joint of guide tube	Separate brazed joint of guide tube for cover operating cable at quarter panel and lock pillar.
2	Cut through B-post	Cut through B-post along extension of bottom edge of rear side window using a body saber saw.
	Cut through A-post	Cut through A-Post using a body saber saw.
3	Separate spotwelds between roof rail/inner side panel	Separate spotwelds between roof rails and inner side panel with a spotweld cutter.
4	Separate spotwelds between roof and rear shelf panel	Separate spotwelds between roof and rear shelf panel using a spotweld cutter.
	Lift roof complete with quarter panels off the body	
5	Separate spotwelds of inner panel	Grind off MIG weld seams between inner side panel and inner panel (B-post).
6	Separate weld joints of cowl panel Separate flange joint of A-post/flange panel	Separate spotwelds between cowl panel and upper dashboard section using a spotweld cutter. Separate MIG weld joints between cowl panel and wheel arch. Separate flange joint between A-post and flange panel.

Printed in Germany – XIII, 1991

Replacing the complete roof

The following body spare parts and special tools are required for the "Replacing the complete roof" repair operation:

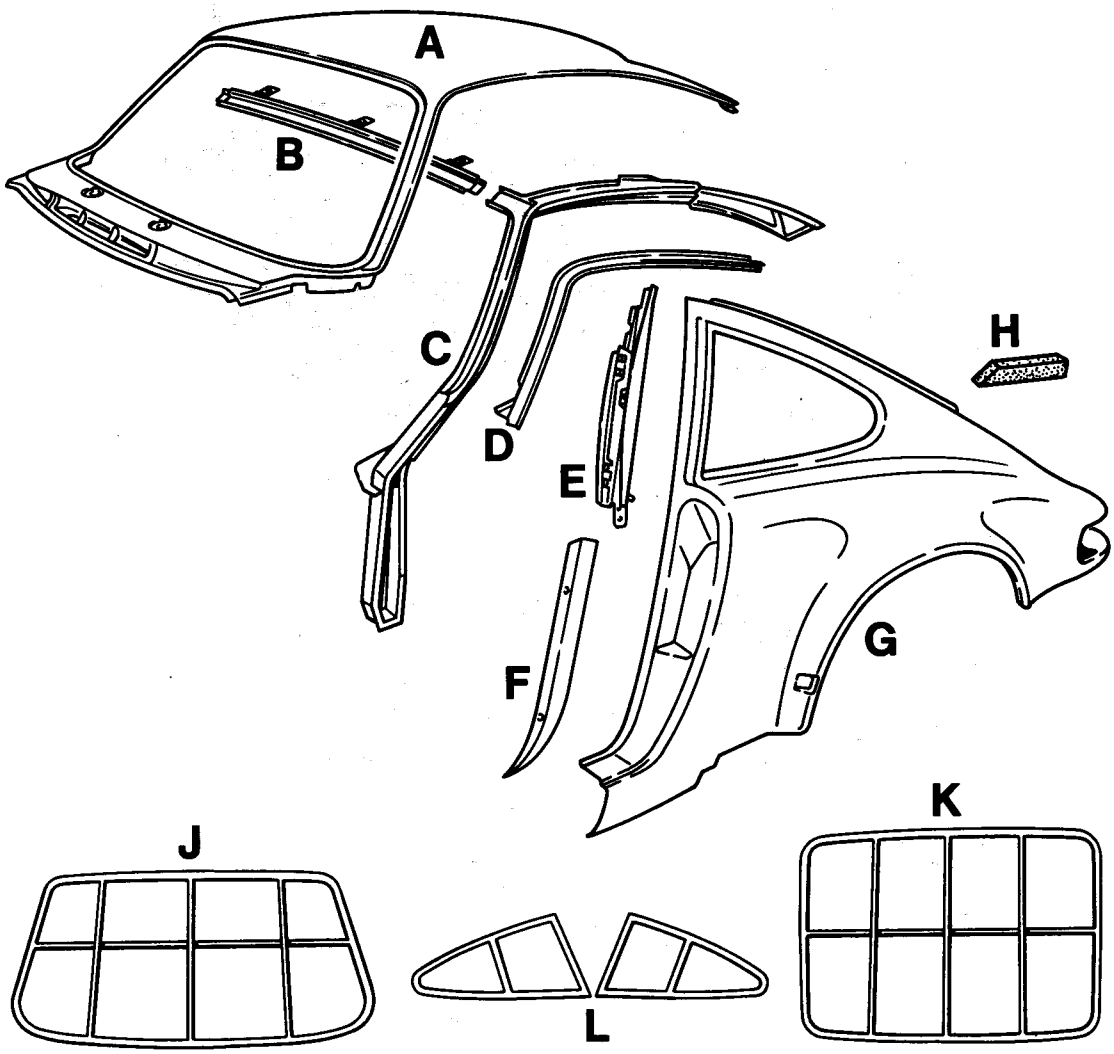

A = Outer roof sheet
B = Transverse windshield section
C = Roof rail
D = Flange panel
E = Inner panel B-post
F = Enclosed angle
G = Quarter panel
H = Sealing
J = Special Tool P 852
K = Special Tool P 853
L = Special Tool P 854

Replacing the complete roof

Fitting roof and quarter panels to the body

Printed in Germany – XIII, 1991

Replacing the complete roof

Fitting roof and quarter panels to the body

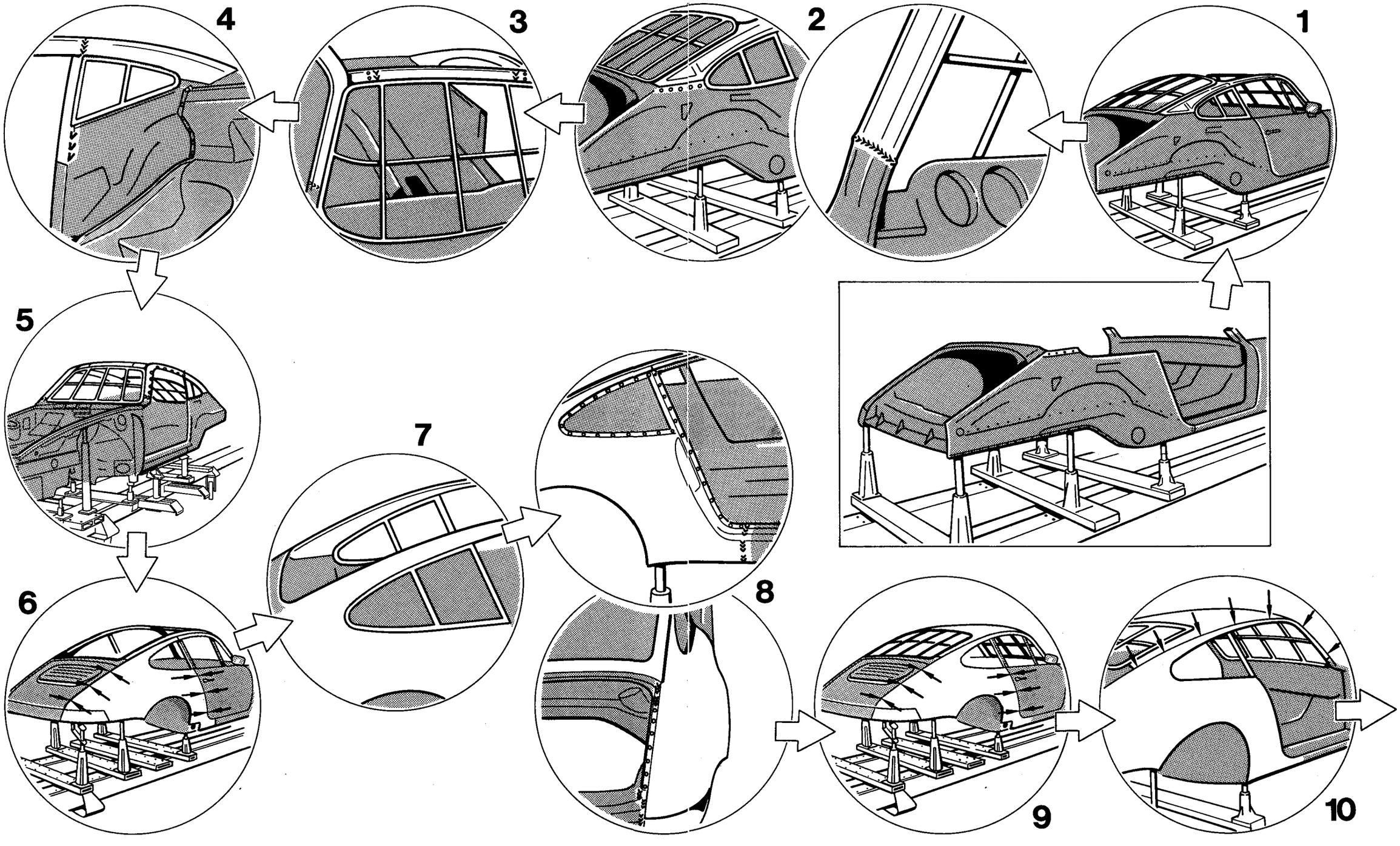

Replacing the complete roof

Fitting roof and quarter panels to the body

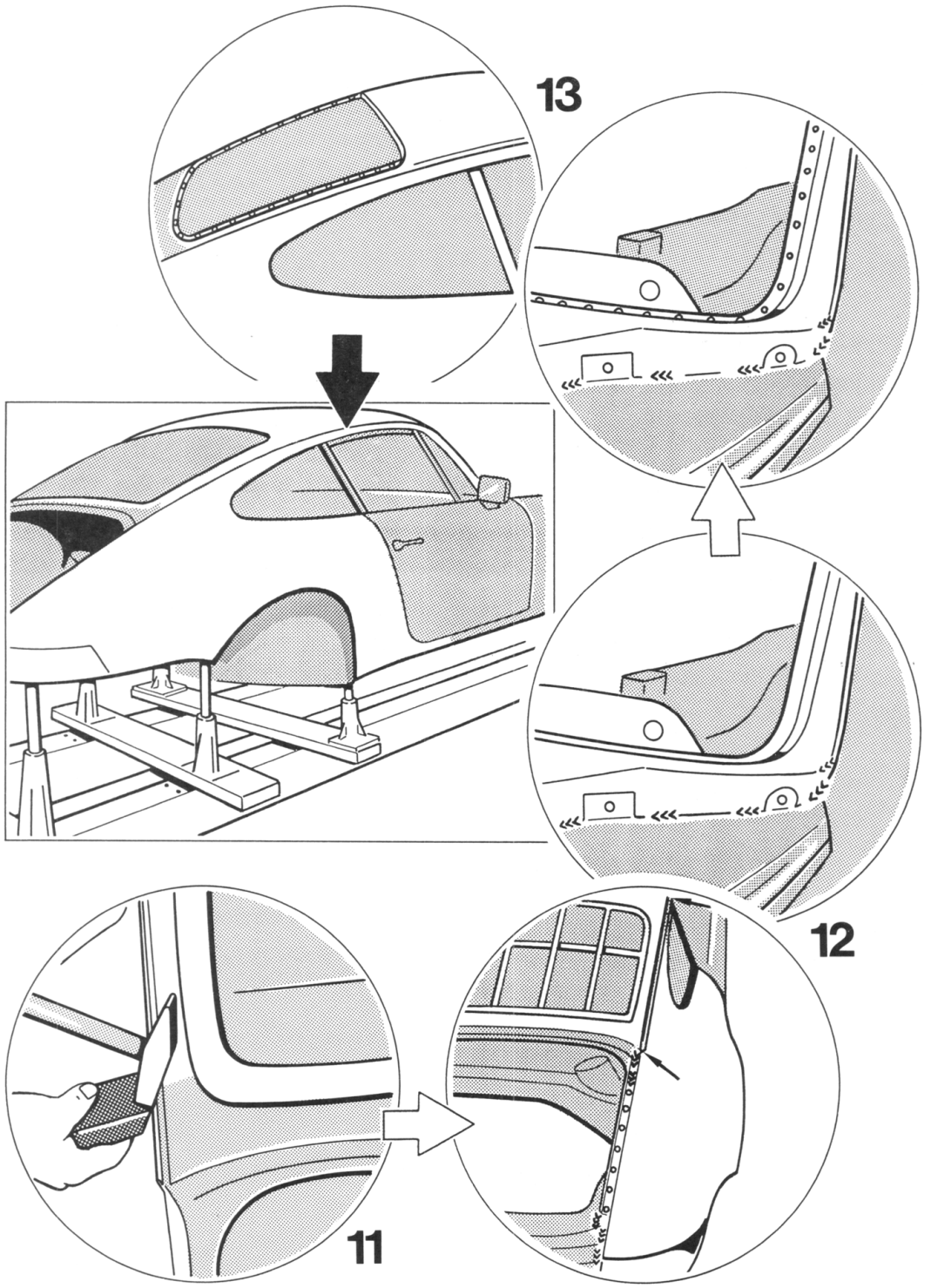

Printed in Germany – XIII, 1991

Replacing the complete roof

Fitting roof and quarter panels to the body

No.	Operation	Instructions
	Cleaning the welding areas	Use a hot air gun or rotary brush to clean remaining sealant, paint etc. from the welding areas of the body. Remove factory primer from welding areas of spare panels.
	Fit doors to body	
	Trial-fit roof rails and flange panels to body	Trial-fit roof rails and flange panels to body observing correct door contours.
1	Insert Special Tools P 852, P 853 and P 854	Insert Special Tools **P 852** (windshield gauge), **P 853** (rear window gauge) and **P 854** (rear side window gauges) into body apertures and clamp to spotweld flanges along with roof rails (using suitable clamping tools).
2	Weld roof rails to body	Weld roof rails to A-posts running a full seam. Spotweld roof rails to inner side panels.
3	Trial-fit windshield transverse section into body and spotweld into place.	Trial-fit windshield transverse section according to contours of Special Tool P 852 into the body, clamp in place with special clamps and apply spotwelds. MIG-weld windshield transverse section and roof rails running a series of intermittent weld seams.
4	Weld B-post inner panel to body	Trail-fit inner panels of B-posts to body and clamp in place with special clamps. MIG-weld B-post inner panels and roof rails running a full seam. MIG-weld B-post inner panels and inner side panels in the rear side window area running a full seam and MIG-weld other areas running an intermittent full seam.

Printed in Germany – XIII, 1991

No.	Operation	Instructions
5	Weld flange panels to body	Spotweld flange panels with roof rails using the door frame contours for reference. MIG-weld flange panels and A-posts running a full seam. MIG-weld flange panels to B-post inner panels and roof rails running a full seam.
	Remove all special tools and finish welding	Remove Special Tools P 852, P853 and P 854 and weld all areas that have not been accessible until now using MIG equipment.
6	Trial-fit quarter panels to body	Trial-fit quarter panels to body. Introduce guide rail for cover operating cable into side panel. Install doors and rear lids to check fit and body contours. Make sure the door-to-body gaps as well as the rear lid-to-body gaps are parallel throughout.
7	Insert Special Tools P 854	Insert Special Tools P 854 into body aperture for rear side window and attach to spotweld flange.
	Tack weld quarter panels using MIG equipment	Tack weld quarter panel to door sill, B-post, spotweld flange for rear side window, inner side panel and cross member using MIG equipment.
8	Spotweld and MIG weld quarter panels	Spotweld quarter panel to inner side panel, B-post and roof rail. MIG-weld quarter panel to door sill, roof rail (in B-post area) and cross member running an intermittent full seam.
	Trial-fit outer roof sheet to body	Adjust outer roof sheet according to spotweld flanges in the body apertures for the windshield and rear window. Make sure the body gaps between outer roof sheet and front and rear lid are parallel throughout.

Printed in Germany – XIII, 1991

No.	Operation	Instructions
9	Insert Special Tools P 852 and P 853	Insert Special Tools P 852 and P 853 into body apertures and clamp to spotweld flanges using suitable clamping tools.
	Tack weld outer roof sheet using MIG equipment	Tack weld outer roof sheet to spotweld flanges in the windshield and rear window areas from inside (passenger compartment) using MIG welding equipment.
10	Spotweld outer roof sheet	Spotweld outer roof sheet to roof rails, quarter panels, flange panels and rear parcel shelf. **Note:** **When spotwelding in the visible areas, insert a copper plate to avoid indentations at the spotwelds.**
11	Flange outer roof sheet	Trim a flange at outer roof sheet and roof rails along flange panels and quyrter panels.
12	MIG-weld outer roof sheet	MIG-weld flange ends of roof outer sheet to C-posts and quarter panels running a full seam. MIG-weld outer roof sheet and B-posts running a full seam. MIG-weld outer roof sheet to A-posts and wheel arch running an intermittent full seam.
	Take out all special tools	
13	Spotweld flanges of spotweld joints	Spotweld flanges of spotweld joints of windshield and rear-window apertures in a continuous line.
	Braze guide tube for cover operating cable	Braze guide tube for cover operating cable to lock pillar (B-post).
	Spotweld angle plate to inner side panels	
	Grind down MIG weld seams	Grind down MIG weld seams of flange ends and B-post.
	Insert seals	Insert seals between quarter panels and inner side panels.

Printed in Germany – XIII, 1991

Replacing part of roof

The following special tools and body spare panels are required for the "Replacing part of roof" operation:

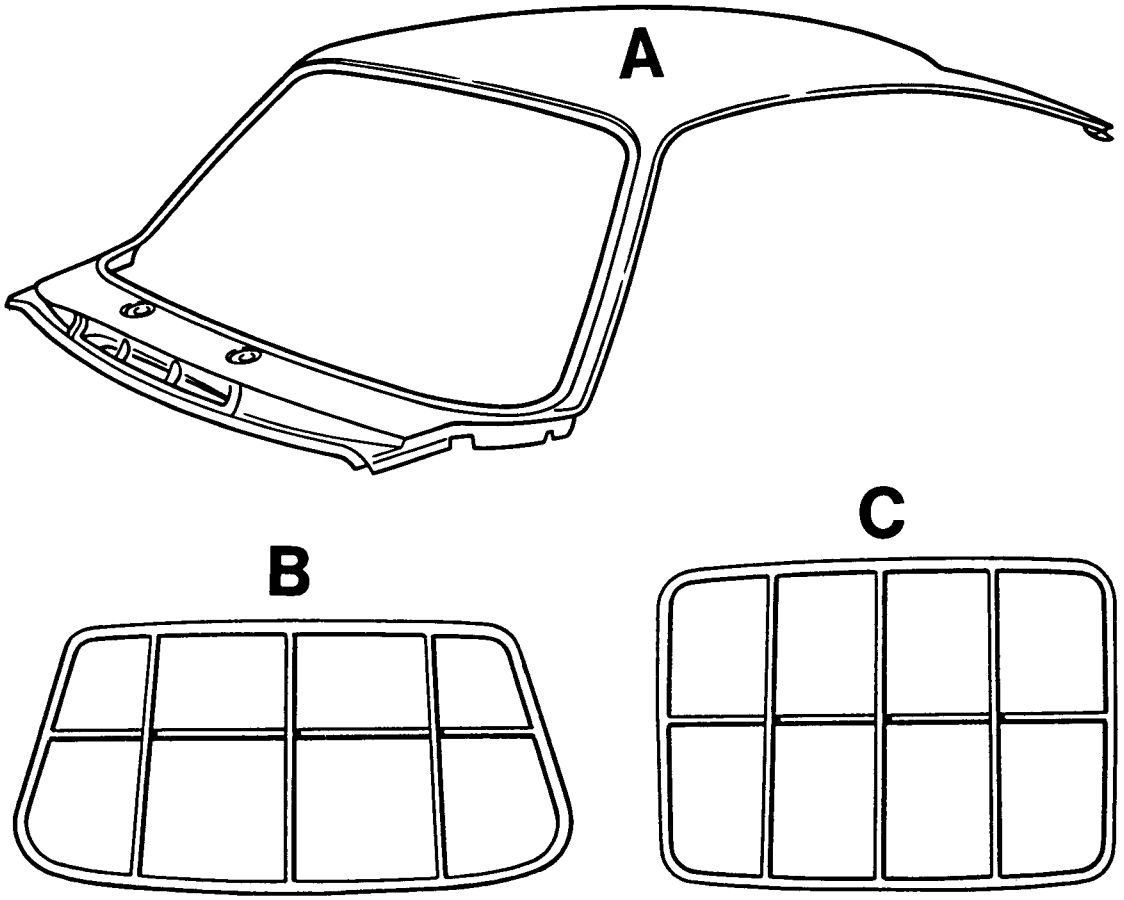

A = Outer roof sheet

B = Special Tool P 852

C = Special Tool P 853

Printed in Germany – XIII, 1991

Replacing part of roof

Cutting part of roof out of body

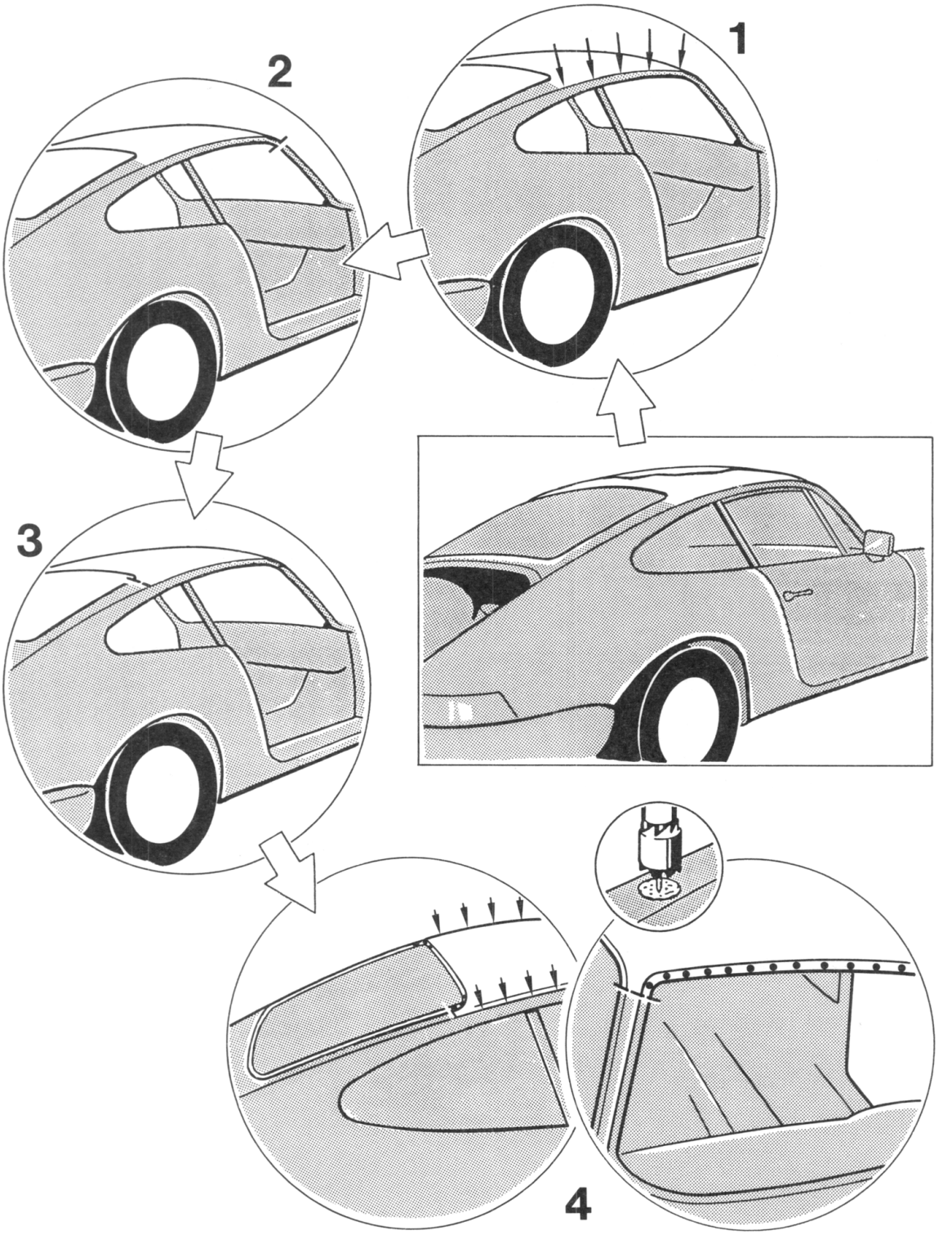

Printed in Germany – XIII, 1991

Replacing part of roof

Cut part of roof out of body

Removing interior including all body glass!

No.	Operation	Instructions
	Remove paint from roof flanges	Remove paint from roof flanges between A- and C-post using a rotary wire brush.
1	Separate flange joints	Separate flange joints between flange panels and roof rails as well as between quarter panels and roof rails. To separate the flanges, heat the flanges and bend them open.
2	Cut through outer roof sheet in A-post area	Cut through outer roof sheet as closely as possible to the windshield transverse section near the A-posts. **Caution: The roof rails must neither be cut through nor damaged.**
3	Cut through outer roof sheet in C-post area	Cut through outer roof sheet in the rear window aperture of the body near the C-posts. **Caution: The roof rails must neither be cut through nor damaged.**
4	Separate spotweld joints of the outer roof sheet	Separate spotweld joints between outer roof sheet and windshield transverse section, roof rails, flange panels and quarter panels using a spotweld cutter.

Printed in Germany – XIII, 1991

Replacing part of roof

Fitting part of roof into body

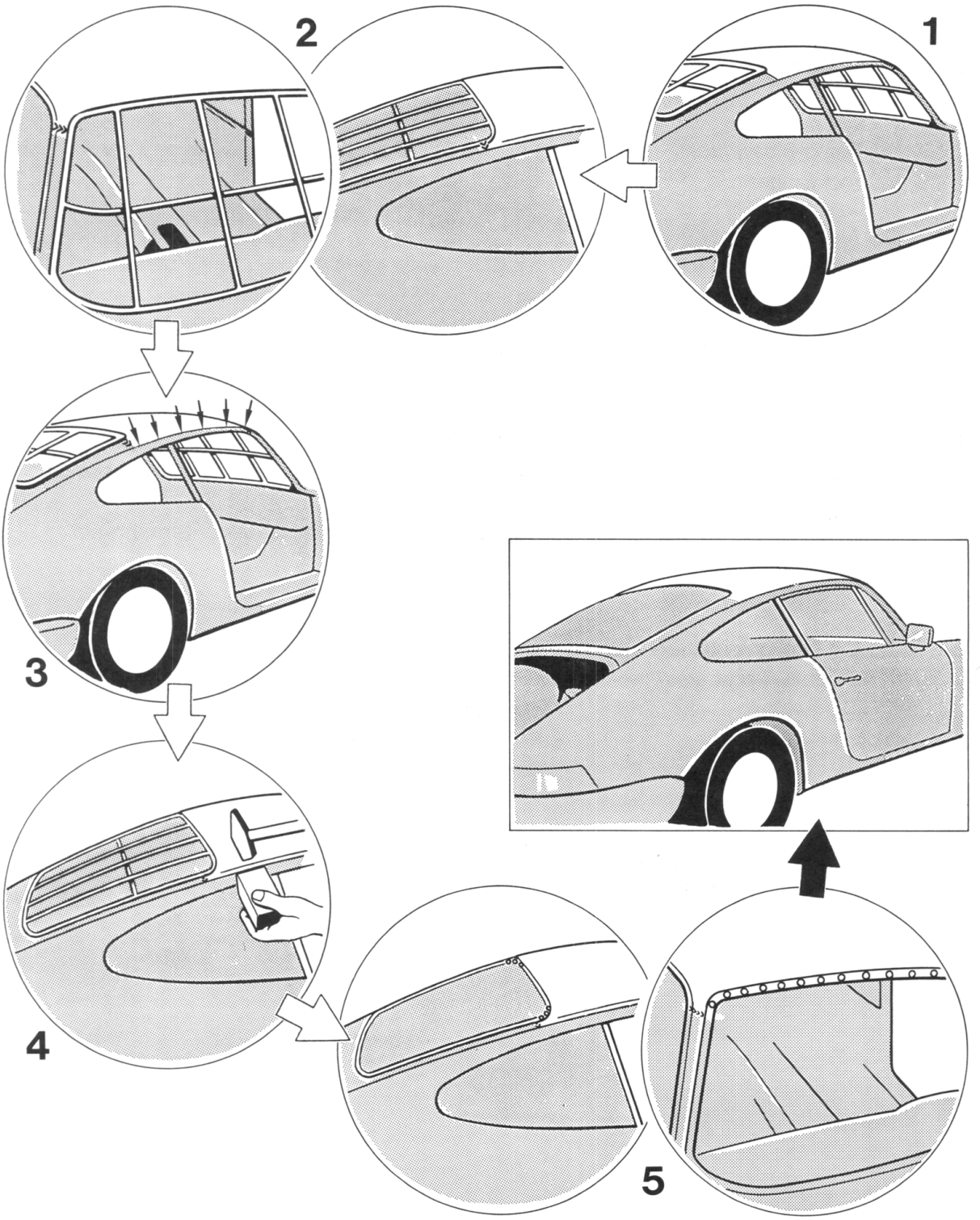

Printed in Germany – XIII, 1991

Replacing part of roof

Fitting part of roof into body

No.	Operation	Instructions
	Clean welding areas	Remove remaining sealant, paint etc. from welding areas of body using a hot air gun or a rotary wire brush. Remove factory primer from welding area of spare outer roof sheet.
	Trial-fit outer roof sheet into body	Trial-fit spare outer roof sheet into body making a butt joint.
1	Insert Special Tools P 852 and P 853	Insert Special Tools **P 852** (windshield gauge), **P 853** (rear window gauge) into body apertures and clamp to spotweld flanges using suitable clamps.
	Fit outer roof sheet	Clamp outer roof sheet to roof rails, flange panels and quarter panels using suitable clamping tools.
2	MIG-weld outer roof sheet	MIG-weld spare outer roof sheet to body outer roof sheet making a full butt joint.
	Tack-weld outer roof sheet using MIG equipment	Tack-weld outer roof sheet to spotweld flanges in the windshield and rear window areas from inside (passenger area) using MIG equipment.
3	Spotweld outer roof sheet	Spotweld outer roof sheet to roof rails, quarter panels and flange panels using spotweld equipment. **Note:** **When spotwelding in the visible areas, insert a copper plate to avoid indentations at the spotwelds.**

No.	Operation	Instructions
4	Trim flange of outer roof sheet	Trim flange of roof outer sheet and roof rails along flange panels and quarter panels.
	Remove all special tools	
5	Spotweld all spotweld flanges	Spotweld all spotweld flanges of windshield and rear window body apertures.
	Finish welding outer roof sheet	Weld outer roof sheet in all A- and C-post areas that have so far been inaccessible running a full MIG seam.
	Grind down MIG weld seams	Grind down MIG weld seams at A- and C-posts.

Printed in Germany – XIII, 1991

Removing cracking noises in the roof rail area

The following tools and materials are required to remove cracking noises:

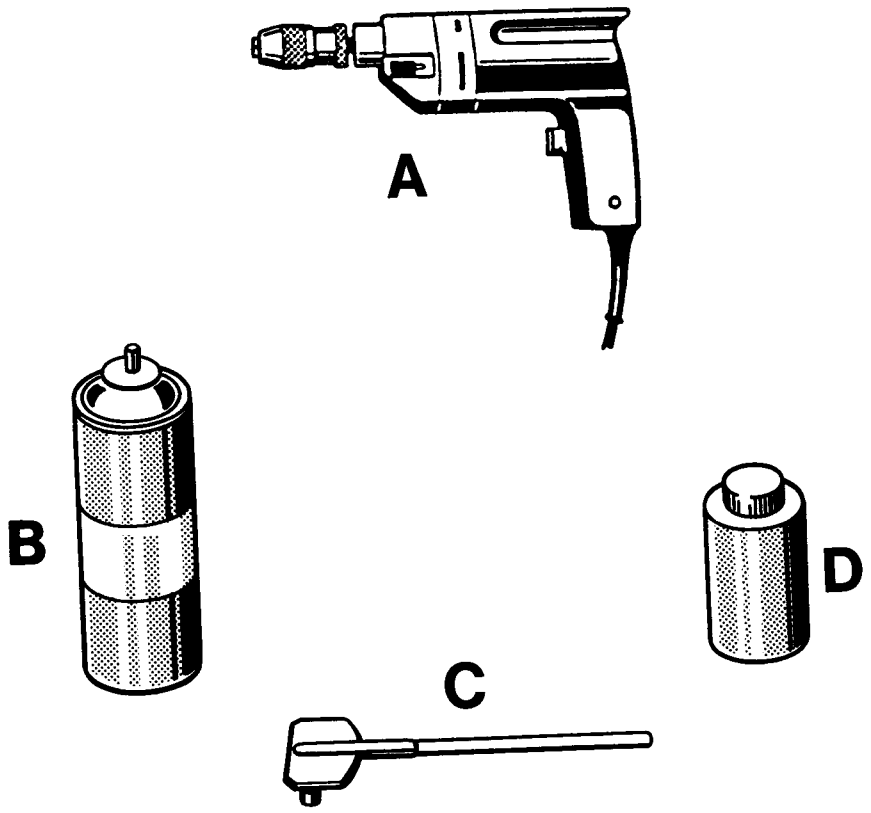

1314-51

A = Power drill

B = Adhesive, commercially available (e.g. assembly foam "Montageschaum plus", supplied by Messrs. Quick-Mix, Osnabrück)

C = Filler tube

D = Cleaning solution

Printed in Germany – XVIII, 1992

Removing cracking noises in the roof rail area

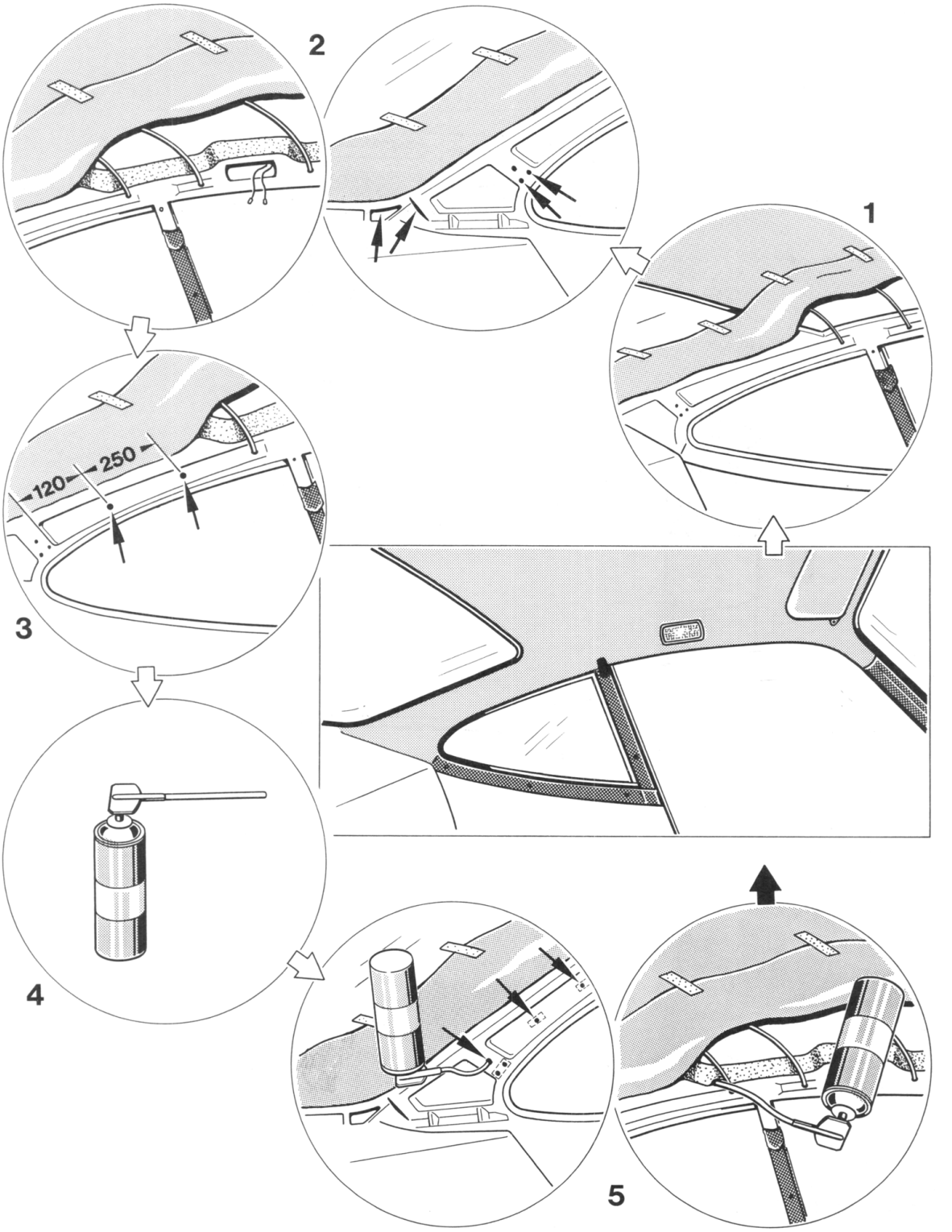

Printed in Germany – XVIII, 1992

Removing cracking noises in the roof rail area

Remove rear side window, coat hook, interior light, sun visor, rear seat belt, rear wall trim panel and rear cover molding.
Detach door seal, B post trim and headlining trim as far as it is required, cover interior.

No.	Operation	Instructions
1	Fit headlining trim	Flap inner headlining trim upwards and attach to rear window and roof lining using adhesive tape.
2	Seal roof frame towards outer roof panel	Plug openings towards outer roof panel in lower rear area of roof frame, e.g. with rags. Cover holes in roof frame with adhesive tape. Cover opening between roof frame and outer roof panel all the way from the rear window to the A post, using adhesive tape.
3	Drill holes	Drill two 10 mm dia. holes into roof frame in rear window area according to dimensional specifications. **Caution: Take care not to damage the outer roof panel with the drill bit and vacuum off drilling swarf during the drilling operations.**
4	Prepare adhesive	Prepare adhesive to manufacturer's specifications.
5	Fill in adhesive	Place filler hose onto bonding cartridge. Hold bonding cartridge with outlet valve pointing down, insert filler hose into bore and fill in bonding material. Take filler hose out of bore and cover bore with adhesive tape. Repeat operation on other bores. The adhesive must be filled in between the roof frame and the outer roof panel all the way from the rear window to the A post.
	Refit removed parts	After the adhesive has cured, the covers can be removed from the body and the removed body parts kann be refitted. **Note** Remove adhesive stains from paintwork and interior immediately with some cleaning solution!

Printed in Germany – XVIII, 1992

Renewing the rear-axle cross tube

Cutting the rear-axle cross tube away from the body

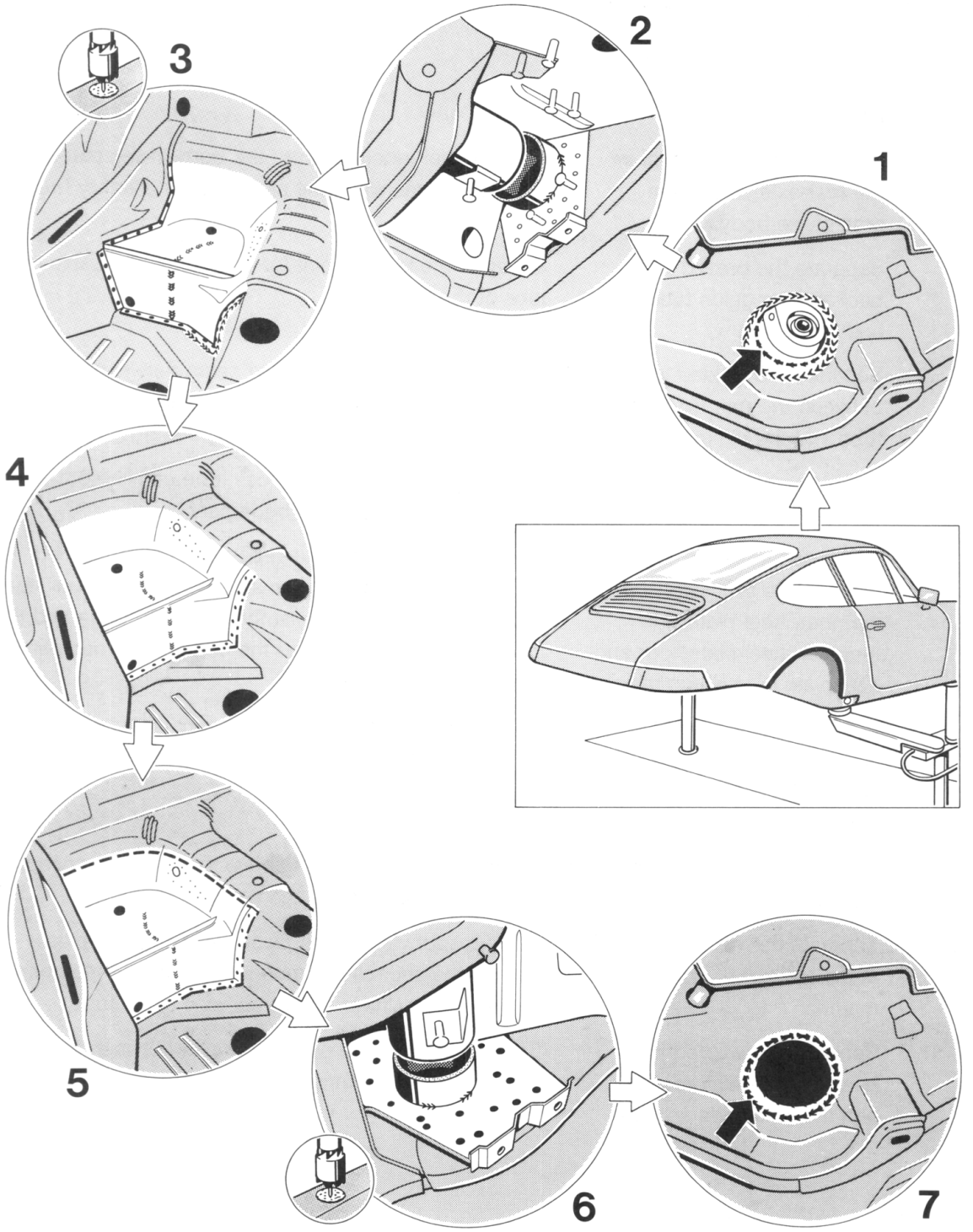

Printed in Germany – X, 1990

Renewing the rear-axle cross tube

Cutting the rear-axle cross tube away from the body

Remove all mechanical assemblies and attached items of equipment, and also the complete interior trim, in the rear-axle cross tube area.

No.	Procedure	Instructions
	Removing the underseal in the rear-axle cross tube area of the body	Remove the underseal from the body in the rear-axle cross tube area with a hit air blower or a rotary brush.
	Separate the brazed joint between the guide tube and the tunnel	Separate the brazed joint for the handbrake cable guide tube at the tunnel.
1	Separate the welded joint between the rear-axle cross tube and the reinforcement	Grind away the inert-gas weld seam between the rear-axle cross tube and the reinforcement.
2	Cut through the rear-axle cross tube	Cut through the rear-axle cross tube parallel to the anti-roll bar mount with a body panel saw.
3	Separate the spot-welded joints at the seat pan/side member, heel plate/side member, heel plate/floor and heel plate connecting member	Use a spot weld cutter to separate the spot-welded joints between the seat pan and the side member, the heel plate and the side member, the heel plate and the foor and the heel plate and the connecting member.
4	Separate the welded joints at the heel plate/floor and heel plate/connecting member/tunnel	Grind away the inert-gas weld seams between heel plate and floor and between heel plate, connecting member and tunnel.
5	Cut through the seat pan and the connecting member	Cut through the seat pan above the seat belt anchorage with a body panel saw, and remove it.
6	Separate the welded joints at the anti-roll bar mount/side member	Using a spot weld cutter, separate the spot welds betwen the anti-roll bar mount and the side member. Remove the remainder of the rear-axle cross tube.
7	Separate the welded joint between the reinforcement and the inner side section	Grind away the inert-gas weld seam between the reinforcement and the inner side section.

Printed in Germany - X, 1990

Renewing the rear-axle cross tube

For the repair work "Renewing rear-axle cross tube", the following body replacement parts are needed:

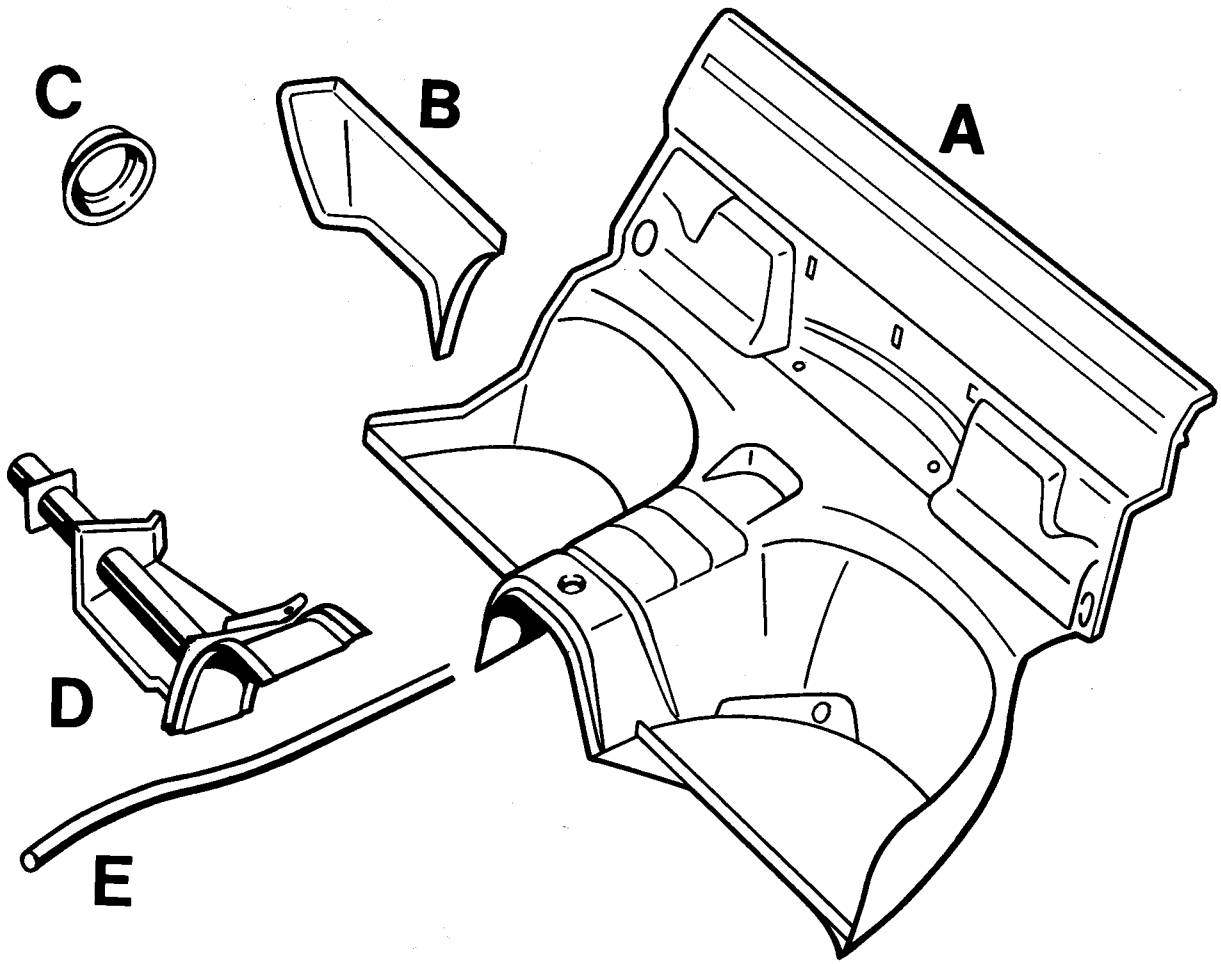

552 - 53

A = Seat pan
B = Heel plate
C = Reinforcement
D = Rear-axle cross tube with connecting member
E = Guide tube

Printed in Germany – X, 1990

Renewing rear-axle cross tube

Inserting rear-axle cross tube into body

Printed in Germany - X, 1990

Renewing rear-axle cross tube

Inserting rear-axle cross tube into body

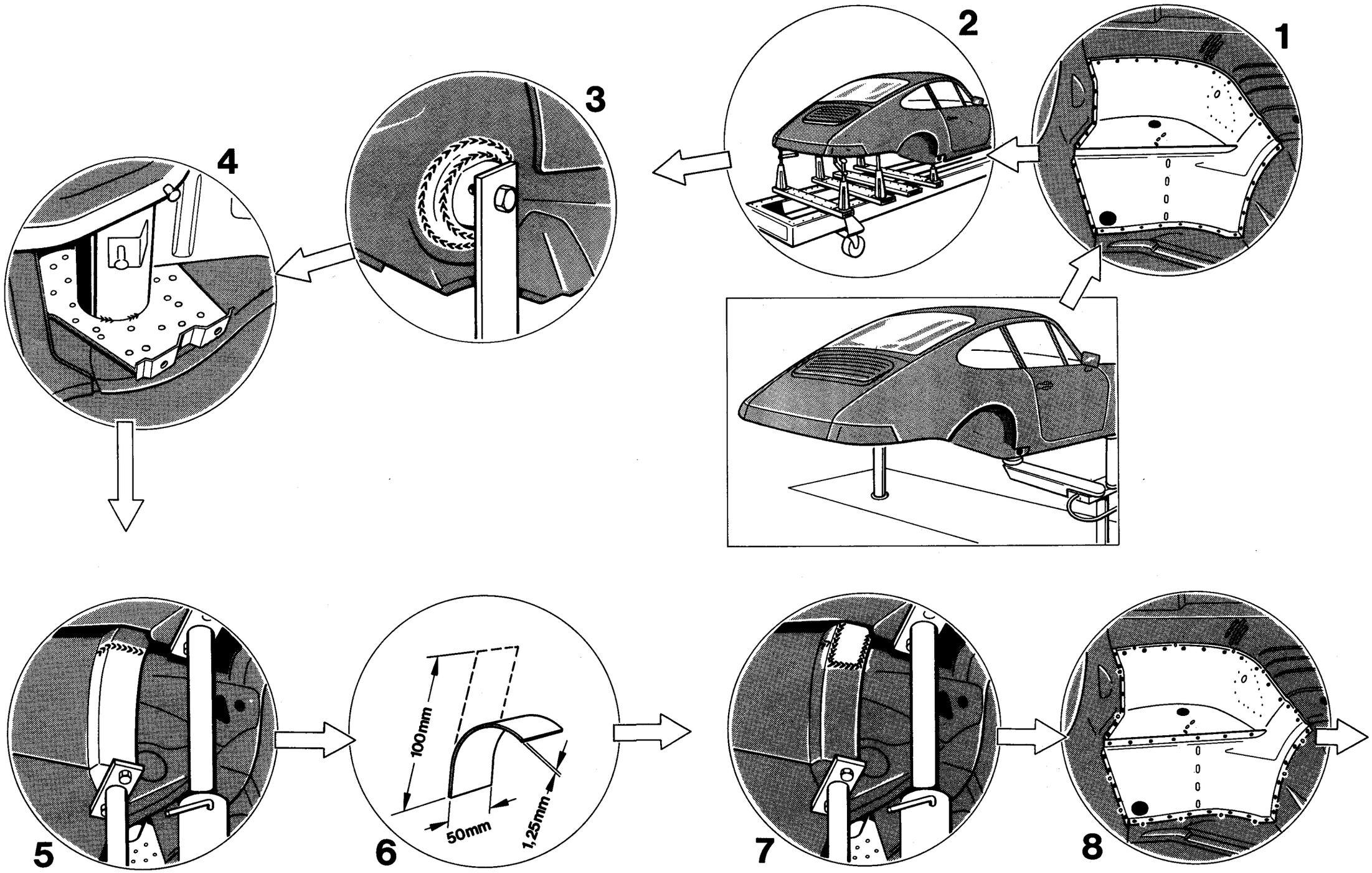

Renewing rear-axle cross tube

Inserting rear-axle cross tube into body

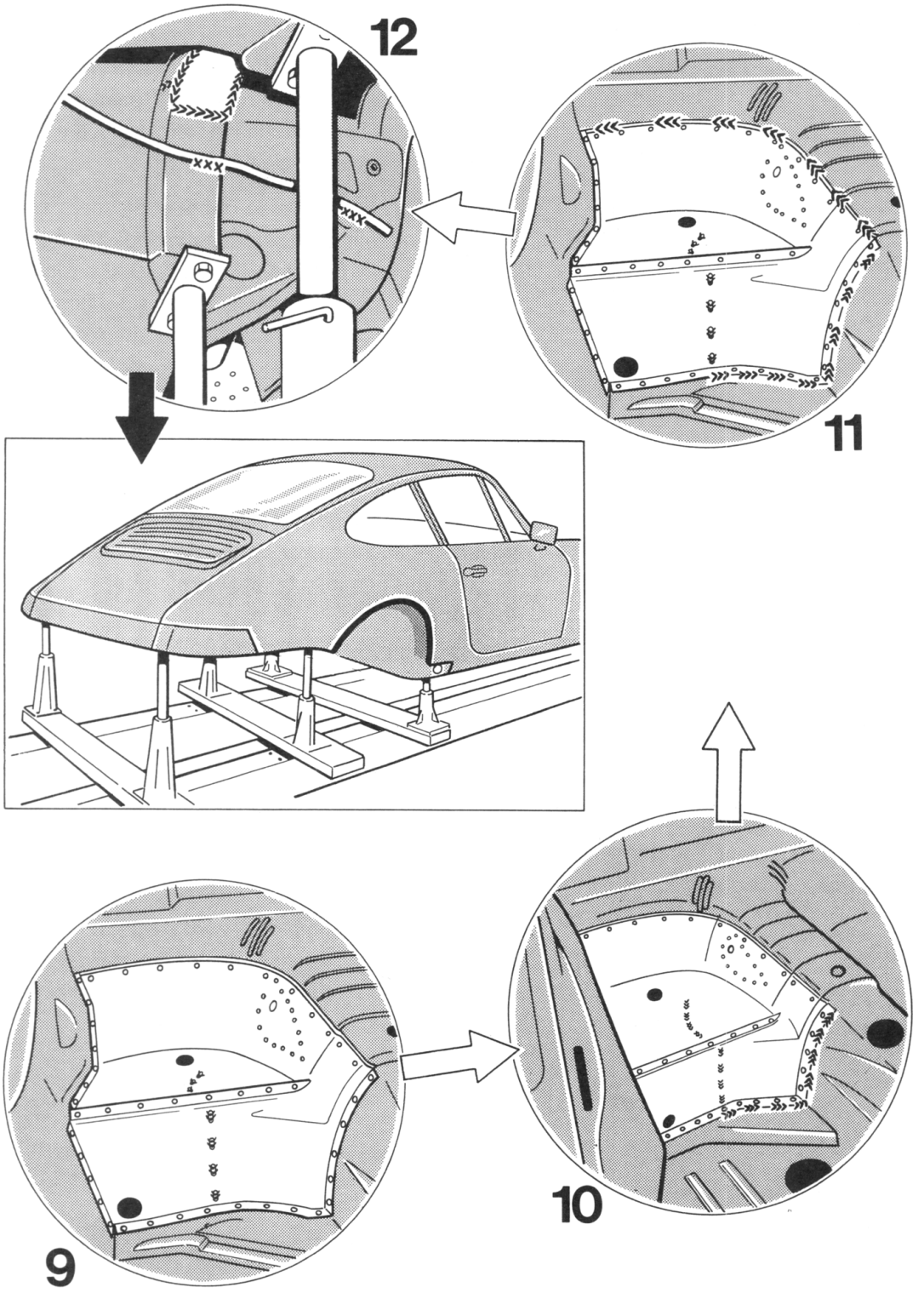

Printed in Germany – X, 1990

Renewing rear-axle cross tube

Inserting rear-axle cross tube into body

No.	Procedure	Instructions
	Clean the weld areas	Clean the weld areas on the body with a hot air blower or rotary brush to remove underseal, paint etc. Remove factory primer coating from replacement parts at the weld areas with a rotary brush.
1	Fit the seat pan and heel plate into the body	Form a step on the outside of the body seat pan. Fit the replacement seat pan so that it overlaps the body seat pan. Fit the heel plate into the body. Drill out the heel plate at the connecting points to the side member, floor and tunnel for plug welding. Drill out the replacement seat pan at the connecting points to the side member and the body seat pan for plug welding.
2	Mount the car on the body alignment rig	Position the car on the aligning angles and secure it.
	Prepare the connecting member with rear-axle cross tube for insertion into the body, and fit to the body	Butt the replacement connecting member up against the connecting member on the body. Use the aligning angle to position the connecting member correctly in the body. Drill out the anti-roll bar plate on the rear-axle cross tube at the connecting points with the side member, for plug welding. Insert the rear-axle cross tube with connecting member into the body and place the reinforcement in position.
	Secure the rear-axle cross tube and connecting member with aligning angles	
3	Weld the reinforcement to the inner side section and the rear-axle cross tube with a full seam	Using the inert gas method, weld the reinforcement to the inner side section and also to the rear-axle cross tube all round, so that a full seam is formed in each case.

Printed in Germany - X, 1990

No.	Procedure	Instructions
4	Plug weld the anti-roll bar mount at the rear-axle cross tube to the side member	Plug weld the anti-roll bar mount on the rear-axle cross tube to the side member using the inert gas method.
5	Weld the replacement connecting member to the connecting member on the body with a full seam	Butt-weld the replacement connecting member to the body connecting member from both sides with a full seam.
6	Make up a reinforcing plate for the connecting member	Make up a reinforcing plate for the connecting member measuring 50 mm x 100 mm, from 1.25 mm thick galvanized steel plate.
7	Weld the reinforcing plate to the connecting member with a full seam	To reinforce the welded joint, weld the reinforcing plate to the connecting member over the butt weld seam, so that a full seam is formed.
8	Tack weld the seat pan and heel plate	Insert the seat pan and heel plate into the body and tack weld into position by the inert gas method.
9	Spot and plug weld the seat pan and heel plate	Spot weld the seat pan and heel plate at the spot-weld flange. Plug weld the replacement seat pan with the side member, the body seat pan and the rear-axle cross tube by the inert gas method. Using the inert gas method, plug weld the seat pan to the rear-axle cross tube in the seat belt catch area. Using the inert gas method, plug weld the heel plate to the side member, the floor, the rear-axle cross tube and the connecting member.
10	Weld the heel plate with a non-continuous full seam, by the inert gas method	Weld the heel plate to the floor and the connecting member with a non-continuous full seam, using the inert gas method. Weld the heel plate to the tunnel and the connecting member with a non-continuous full seam, using the inert gas method.
11	Weld the seat pan with a non-continuous full seam, using the inert gas method.	Weld the replacement seat pan to the body seat pan witha non-continuous full seam, using the inert gas method.
12	Braze on the handbrake cable guide tube	Braze the handbrake cable guide tube to the tunnel, connecting member and rear-axle cross tube.

Printed in Germany – X, 1990

Renewing side panel with inner side section and side member

Cutting rear body section out of body on one side

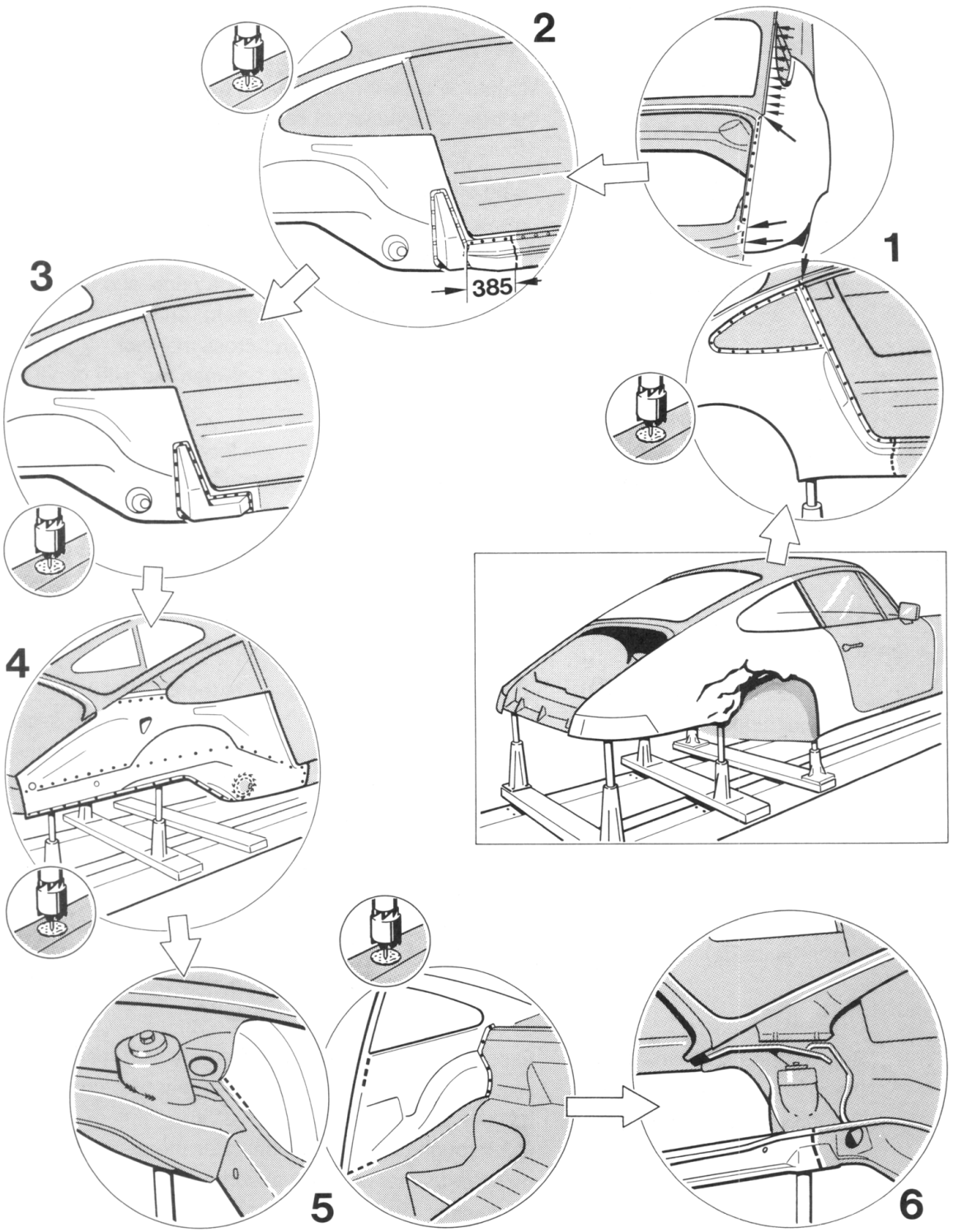

Printed in Germany – X, 1990

Renewing side panel with inner side section and side member

Cutting rear body section out of body on one side

Remove all mechanical assemblies and attached equipment and also the complete interior trim including glass from the interior and exterior of the rear body section.

No.	Procedure	Instructions
	Mount car on body alignment rig	Mount the car with mechanical assemblies in place at the front on the correct set of alignment angles, and secure it.
1	Separate the welded joints at the side panel Separate the folded joint between side panel and roof	Using a spot weld cutter, separate the spot welds between the side panel and the inner side section, the B-post and the roof frame member. Separate the inert gas weld seams between the side panel and the door sill, roof frame (in the B-post area), outer roof panel/inner side section and cross-member. Cut through the folded joint between the side panel and the roof.
2	Cut through the door sills and separate the welded joints	Cut through the door sills with the body panel saw. Separate the spot welds between the door sill and the side member and the central side member with the spot weld cutter. Grind away the inert gas weld seams between the door sill and the gusset plate.
3	Separate the welded joints at the gusset plate	Separate the welded joints between the gusset plate and the inner side section and central side member.
4	Separate the welded joints at the inner side section (from the outside)	Bend up the angled surround at the B-post. Separate the spot welds between the inner side section and the side member, roof frame and central side member, using spot weld cutters. Grind away the inert gas weld seam between the reinforcement and the rear-axle cross tube.
5	Separate the welded joints at the inner side section (from the inside)	Separate the spot welds between the inner side section and the seat pan and the rear-window shelf with a spot weld cutter. Grind away the inert gas weld seams between the inner side section and the B-post and side member.
6	Separate the spot welds on the side member Cut through the side member	Separate the spot welds between the side member and cross-member, engine mount and rear-axle cross member with a spot weld cutter. Cut through the side member near the rear-axle cross-member (center of shock absorber mount) with the body panel saw.

Printed in Germany - X, 1990

Renew the side panel with inner side section and side member

For the "Renewing side panel with inner side section and side member" repair, the following replacement body parts and special tools are needed:

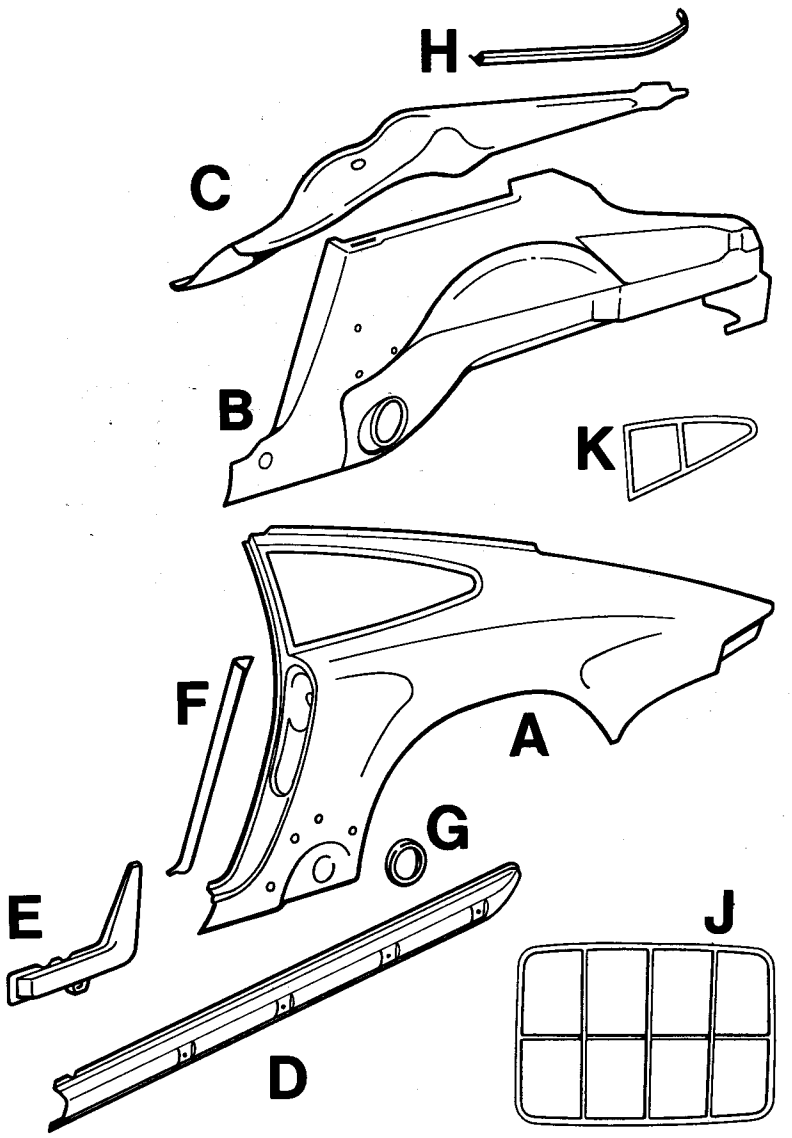

556 - 53

A = Side panel
B = Inner side section
C = Side member
D = Door sill
E = Gusset plate
F = Angled surround
G = Reinforcement
H = Sectioned rail
J = Special tool P 853
K = Special tool P 854

Printed in Germany – X, 1990

Renewing side panel with inner side section and side member

Insert the rear body section into the body at one side

Printed in Germany - X, 1990

Renewing side panel with inner side section and side member

Insert the rear body section into the body at one side

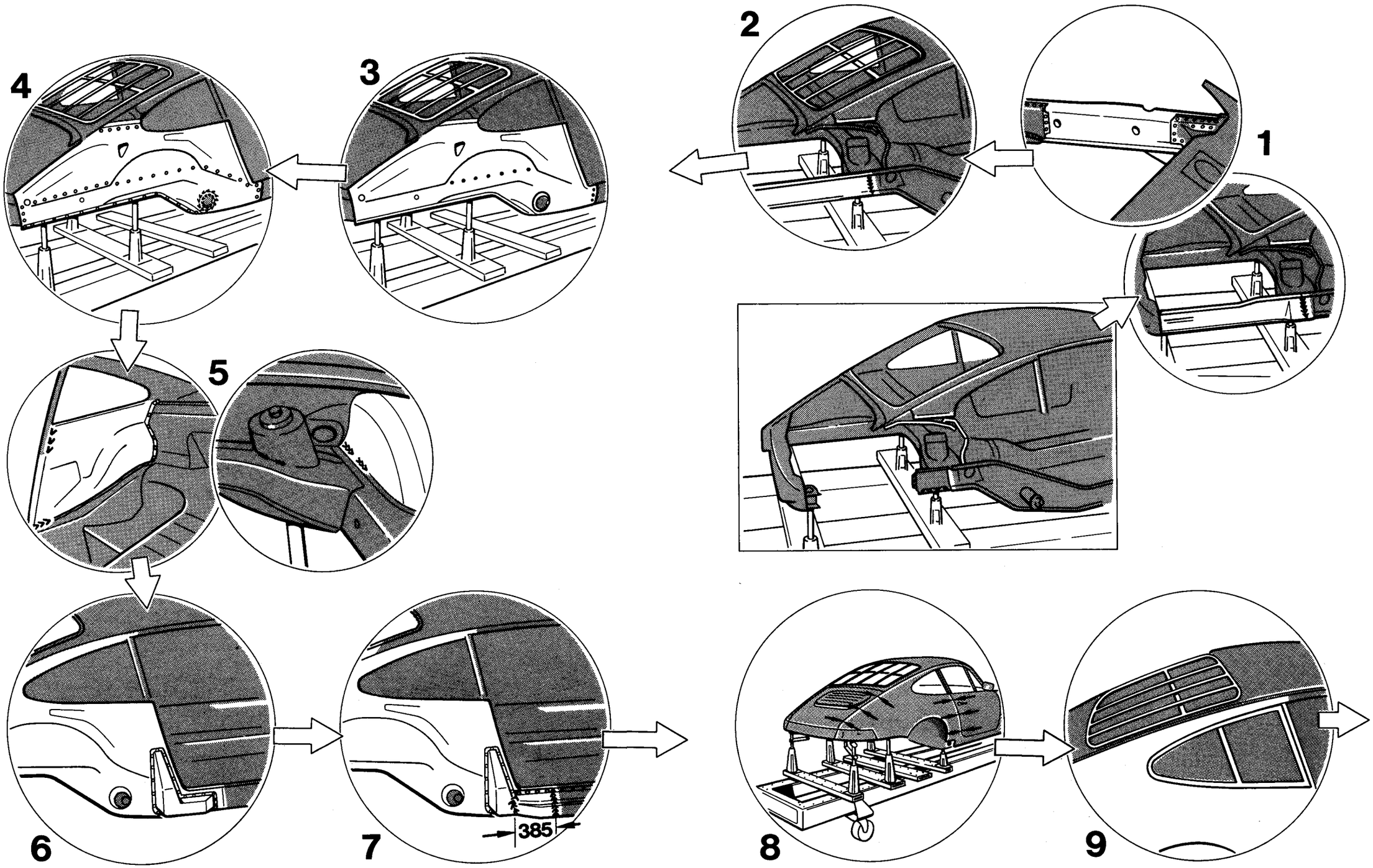

Renewing side panel with inner side section and side member

Insert the rear body section into the body at one side

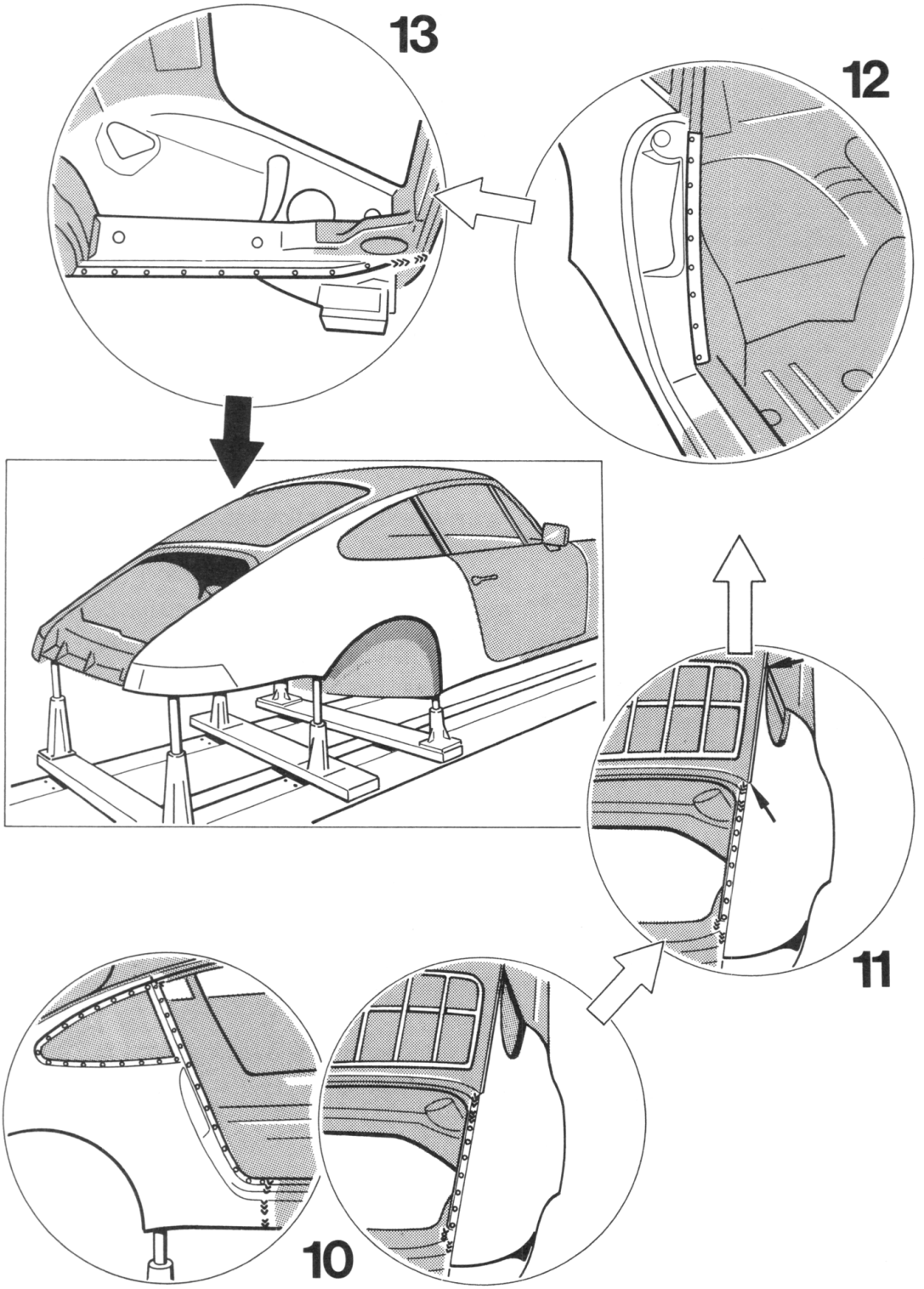

Printed in Germany – X, 1990

Renewing side panel with inner side section and side member

Insert the rear body section into the body at one side

No.	Procedure	Instructions
	Clean the weld areas	Clean the body areas to be welded with a hot air blower or rotary brush to remove underseal, paint etc. Remove factory-applied primer with a rotary brush from the weld areas on the replacement parts.
1	Fit the side members into the body and weld in	Fit the side members into the body, secure with clamping tools and tack weld into position. Butt weld the replacement side member to the body side member with a full seam, using the inert gas method. Plug weld the side member to the cross-member, engine mount and rear-axle cross-member under inert gas.
2	Insert special tool P 853	Place special tool P 853 (rear window template) into body cutout for rear window and secure with clamps to the spot weld flange.
3	Fit inner side section into body and prepare for welding in	Fit the inner side section into the body. Drill out the inner side section ready for plug welding at points not accessible for spot welding. After inserting the side section into the body, place the reinforcement on the rear-axle cross tube.
4	Weld the inner side section into the body (from the outside)	Secure the inner side section with clamps and spot weld to the cross-member, side member (where accessible) and roof frame. Using the inert gas method, plug weld the inner side section to the central side member and at the areas of the side member not accessible for spot welding. Using inert gas, weld the reinforcement all round with a full seam to the inner side section and the rear-axle cross tube.
5	Weld the inner side section to the body (from the inside)	Using inert gas, weld the inner side section to the B-post and side member all round with a discontinuous seam. Plug weld the inner side section to the rear window shelf and seat pan.

Printed in Germany - X, 1990

No.	Procedure	Instructions
6	Fit the gusset plate, prepare for inserting and weld under inert gas	Fit the gusset plate to the inner side section and central side member. Drill out the gusset plate for plug welding. Plug weld the gusset plate to the inner side section and central side member under inert gas.
7	Fit and weld in the door sills	Fit the door sills to the body so that a butt joint is formed. Drill out the door sills for plug welding. Secure the door sills with clamps and tack weld into position under inert gas. Using the inert gas method, butt weld the replacement door sill to the body door sill, with a full seam. Spot weld the door sill to the side member and the central side member. Using inert gas, weld the door sill to the central side member and gusset plate, with a discontinuous full seam. Grind the inert gas weld seam.
	Weld half-mounts for impact tube or impact damper	Spot weld the impact tube and impact damper half-mounts and weld them under inert gas with a discontinuous full seam.
8	Fit side panel to body	Fit side panel to body. Install door and engine compartment lid to check body contours. Gaps between door and body and between rear lid and body must be parallel all round.
9	Insert special tool P 854	Place special tool P 854 (template for rear side window) in the rear side window body cutout and secure to spot weld flange with clamps.
	Tack weld side panel under inert gas	Using inert gas, tack weld the side panel to the door sill, B-post, rear side window spot-weld flange, inner side section and cross-member. Take out special tool P 854 (rear side window template).
10	Spot weld and inert-gas weld side panel	Spot weld the side panel to the inner side section, B-post and roof frame. Using the inert gas method, weld the side panel to the door sill, roof frame (in the B-post area), outer roof panel/inner side section and cross-member, with a discontinuous full seam.

Printed in Germany – X, 1990

No.	Procedure	Instructions
	Fold roof over into side panel	Fold side panel edge over web on roof.
11	Weld the ends of the fold using inert gas.	Using inert gas, weld the side panel to the roof at the end of the fold in the B-post area, with a full seam. Using inert gas, weld the side panel to the roof at the end of the fold in the rear lid area, with a full seam. Take out special tool P 853 (rear window template). Grind the inert gas weld seams.
12	Spot weld the angled surround to the inner side section	
13	Spot and tack weld the sectioned rail to the side member	Spot weld the sectioned rail to the side member/inner side section spot weld flange on the inside, and tack weld under inert gas in the engine mount area.

Printed in Germany - X, 1990

Renewing rear-axle cross-member

For the repair "Renewing rear-axle cross-member" the following replacement body parts are needed:

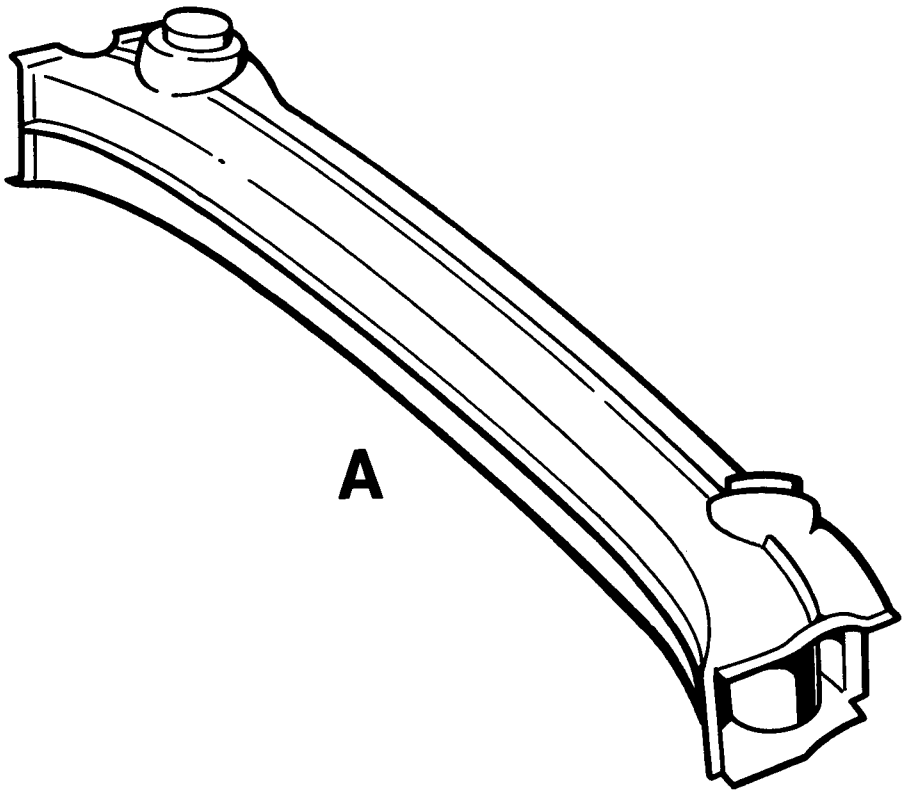

562 - 53

A = Rear-axle cross-member

Printed in Germany – X, 1990

Renewing rear-axle cross-member

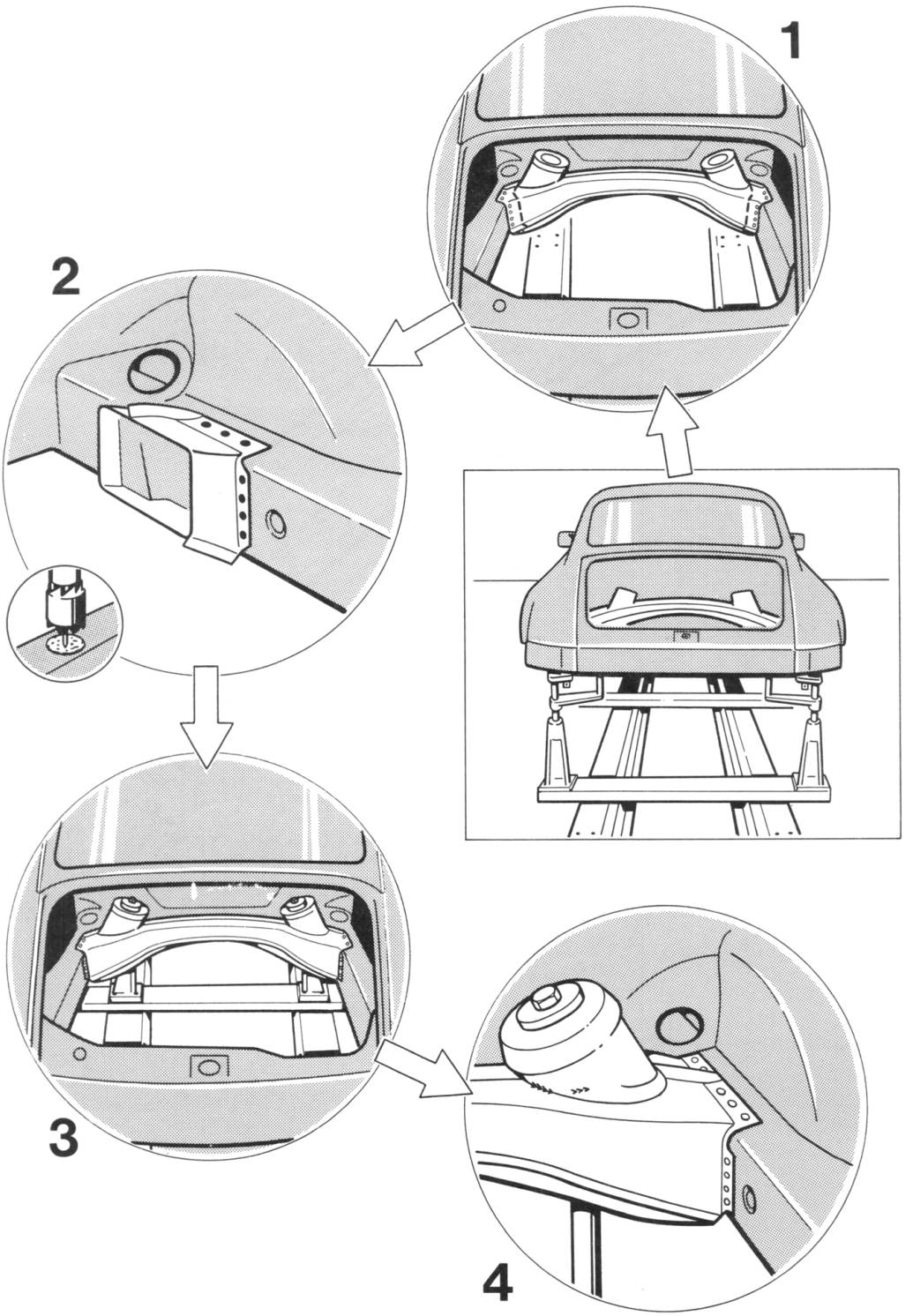

Printed in Germany – X, 1990

Renewing rear-axle cross-member

Remove all mechanical assemblies and attached equipment on and in the rear section of the body.

No.	Procedure	Instructions
	Place the car on the body alignment rig	Mount the car, with mechanical equipment in position at the front of the body, on the correct set of alignment angles and secure it.
1	Cut through the rear-axle cross-member	Cut through the rear-axle cross-member parallel to the side members, using the body panel saw.
2	Separate the welded joints at the rear-axle cross-member/side member	Separate the spot welds between the rear-axle cross-member and the side members with the spot weld cutters.
	Clean the weld areas	Use a hot air blower or rotary brush to remove underseal, paint etc. from the weld areas on the side members. Remove the factory-applied primer coating from the weld areas of the replacement parts with a rotary brush.
	Preparing the rear-axle cross-member for installation in the body	Drill out the rear-axle cross-member at the connecting points with the side members, ready for plug welding. At one side of the rear-axle cross-member, bend the upper spot welding flange up vertically.
3	Installing rear-axle cross-member in body	Insert the rear-axle cross-member into the body from below. Secure the rear-axle cross-member with aligning angles. Align the folded-up spot-welding flange with the side member.
4	Plug weld the rear-axle cross-member to the side members	Plug weld the rear-axle cross-member to the side members by the inert gas method.

Printed in Germany – X, 1990

Partly renewing rear section of body

For the part-section repair "Partly renewing rear section of body" the following replacement body parts are needed:

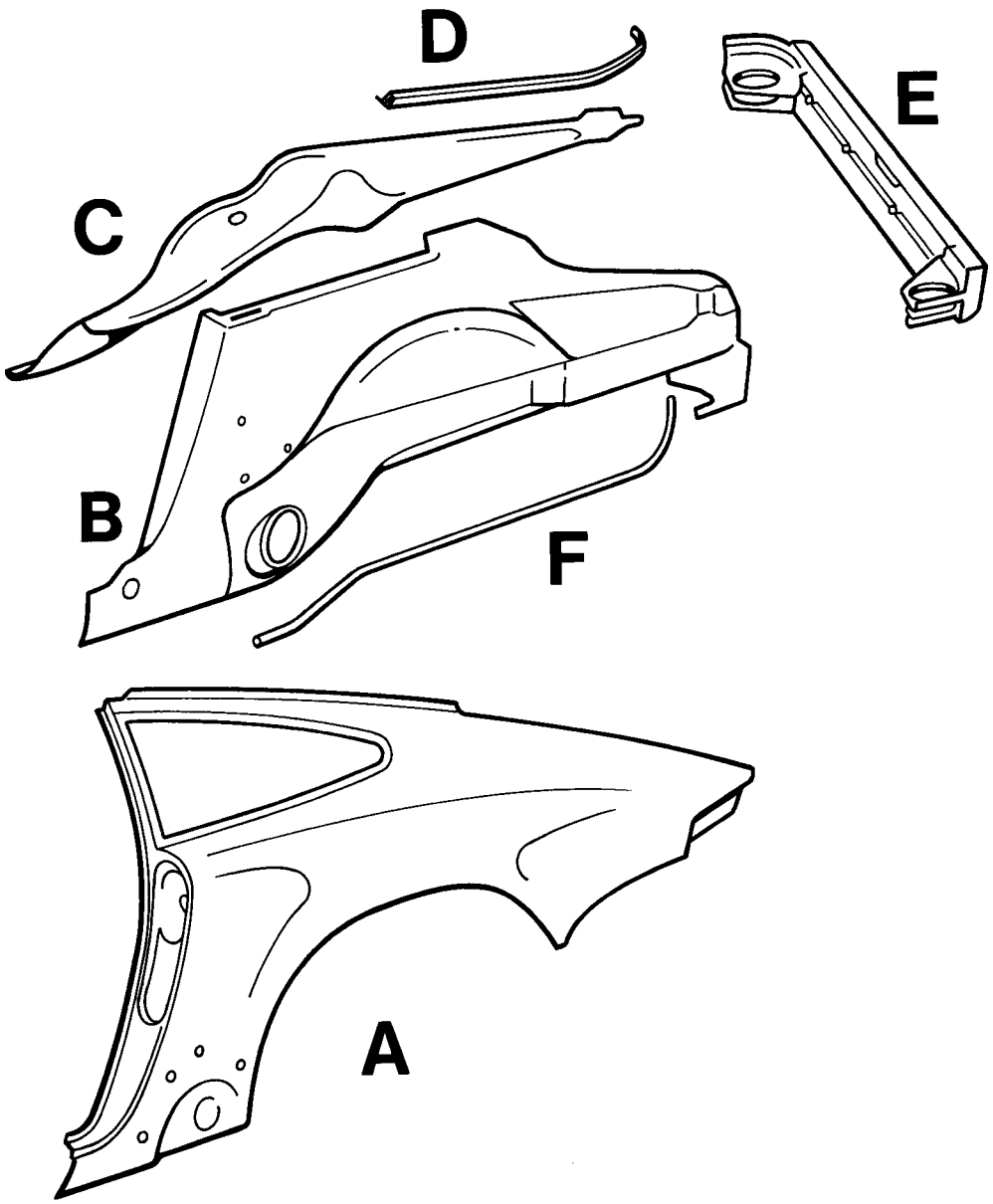

A = Side panel
B = Inner side section
C = Side member
D = Sectioned rail
E = Cross-member with engine mount
F = Guide tube for lid operating cable

Printed in Germany – X, 1990

Partly renewing rear section of body

Renewing cross-member with engine mount, partly renewing side panels, inner side sections and side members

Cut the rear section partly away from the body

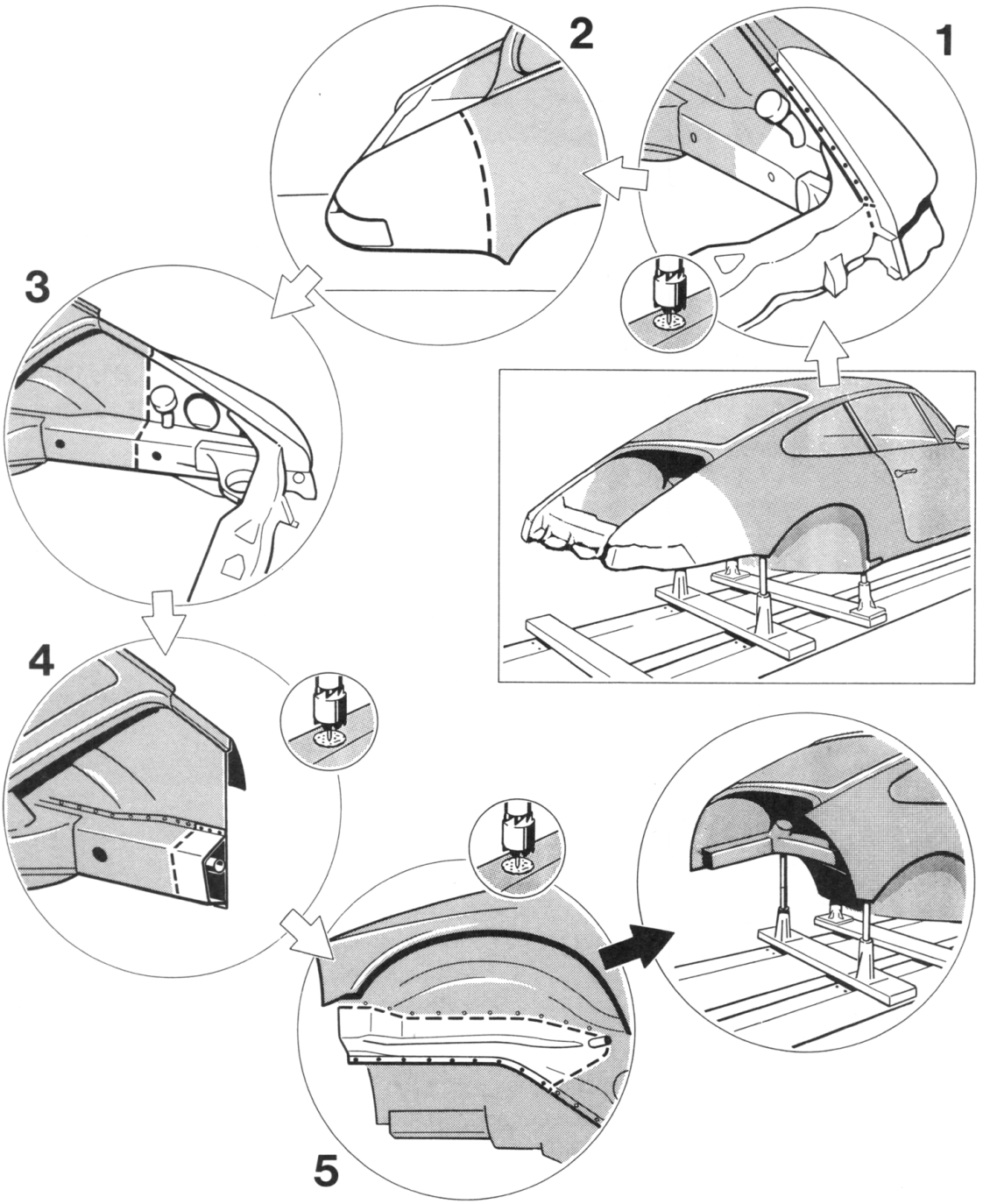

Printed in Germany – X, 1990

Partly renewing rear section of body

Renewing cross-member with engine mount, partly renewing side panels, inner side sections and side members

Partly renewing rear section of body

No.	Procedure	Instructions
	Place car on body alignment rig	Mount the car with mechanical assemblies in position at the front on the correct set of aligning angles, and secure it.
1	Separate the side panel welds in the damaged area	In the damaged body area, separate the spot welds between the side panels and the inner side sections with spot weld cutters. Grind away the inert-gas weld seams between the side panels and the cross-member.
2	Separate the side panels from the body	Cut away the damaged side panel areas with the body panel saw.
3	Cut away the inner side sections and the side members	Cut away the damaged areas of the inner side sections and the side members with the body panel saw.
4	Cut away the side members in a stepped pattern	**Cut away both side members so that the cut edges of the side members form a step in relation with the cut edges of the inner side sections.** Separate the spot welds between the side members and the inner side sections, using spot weld cutters. Cut away the side members with the body panel saw after they have been separated.
5	**Right side of car only:** Cut away the inner side section in the oil filler pipe area	Separate the spot welds between the inner side section and the lower side member with spot weld cutters. Cut through the inner side section below the upper spot welds between the inner side section and the side member, using the body panel saw.
	Separate the brazed jount for the guide tube	Separate the brazed joint for the lid cable guide tube on the inner side section and at the lock post.

Printed in Germany – XI, 1991

Partly renewing rear section of body

Renewing cross-member with engine mount, partly renewing side panels, inner side sections and side members

Partly insert the rear body section into the body

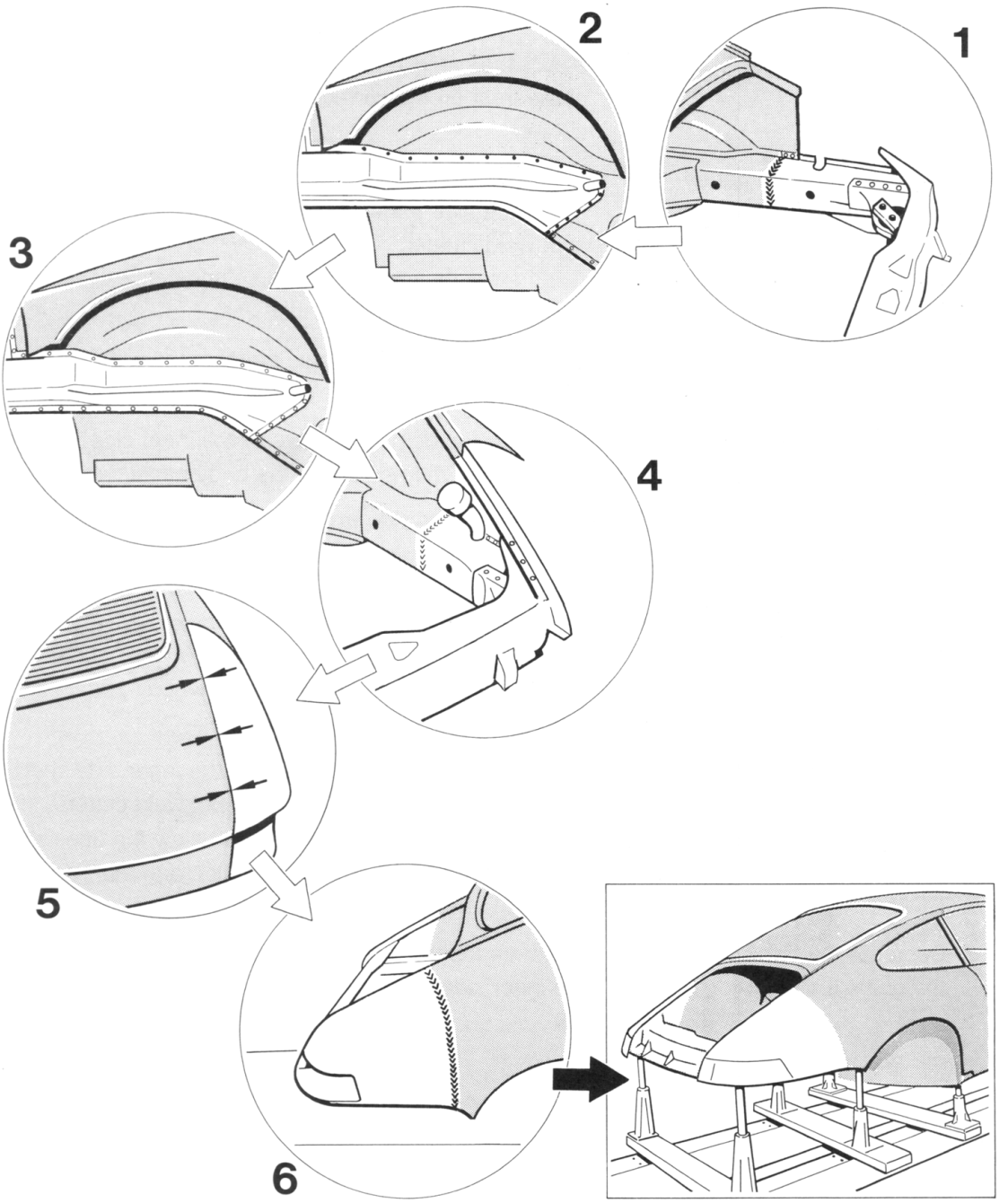

Printed in Germany – XI, 1991

Partly renewing rear section of body

Renewing cross-member with engine mount, partly renewing side panels, inner side sections and side members

Partly insert the rear body section into the body

No.	Procedure	Instructions
	Clean the weld areas	Use a hot air blower or rotary brush to remove underseal, paint etc. from the weld areas on the body. Remove factory-applied primer coating from the weld areas on the replacement parts with a rotary brush.
	Align cross-member with rig aligning angles	
1	Fit the side member to the body and weld in	Make a butt joint at the side member, secure it with clamping tools and tack weld into position under inert gas. Butt weld the replacement side member to the body side member under inert gas, with a full seam. Spot weld the side member to the cross-member and engine mount. Grind the butt weld seams on the side members.
2	Prepare inner side sections for installing in body	Fit the inner side members into the body. Flange the replacement inner side sections outwards and overlap them with the body inner side sections. In the side panel contact areas, make a butt joint with the inner side sections. **Right side of car only:** Drill out the inner side section in the upper side member and rear-axle cross-tube areas, ready for plug welding. **Left side of car only:** Drill out the inner side member in the side member section area, ready for plug welding.
3	Weld the inner side sections into the body	Secure the inner side sections with clamping tools and tack weld them into position under inert gas. Butt weld the inner side sections in the side panel contact areas with a full seam, under inert gas. **Right side of car only:** Plug weld the replacement inner side section to the body inner side section in the upper side member and rear-axle cross-tube areas, using inert gas. Spot weld the replacement inner side member to the body inner side member and the side member.

Printed in Germany – X, 1990

No.	Procedure	Instructions
		Left side of car only: Spot weld the replacement inner side section with the body side section and the side member. Plug weld the inner side section in the side member section area under inert gas. **Make an additional discontinuous full-seam inert gas weld at all spot and plug weld points between the replacement inner side sections and the body side sections.**
4	Spot weld cross-member with inner side sections	
	Weld impact tube or impact damper half-mounts	Spot weld the impact tube or impact damper half-mounts or weld by the inert gas method with a discontinuous full seam.
	Grind the butt weld seams	Grind the butt weld seams on the inner side sections in the side panel contact areas.
	Braze on the lid cable guide tube	Insert the guide tube for the lid release cable and braze it to the lock post, inner side section and cross-member.
5	Fit the side panels into the body and tack weld	Fit the side panels to the body. Insert the rear lid to check the body contour. The gap between the rear lid and the body must be parallel all round. Tack weld the side panels into position under inert gas.
6	Spot and inert-gas welding of side panels	Butt weld the replacement side panels to the body side panels under inert gas, with a fil seam. Spot weld the replacement side panels with the inner side panels. Using the inert gas method, weld the side panels to the cross-member with a discontinuous full seam.
	Fit the sectioned rails and weld them to the side members	Fit the sectioned rails, spot weld them to the spot weld flanges on the side members/inner side sections and tack weld them in the engine mount areas.
	Grind the butt weld seams on the side panels	

Printed in Germany – X, 1990

Renewing engine mount

For the "Renewing engine mount" repair, the following replacement body parts are needed:

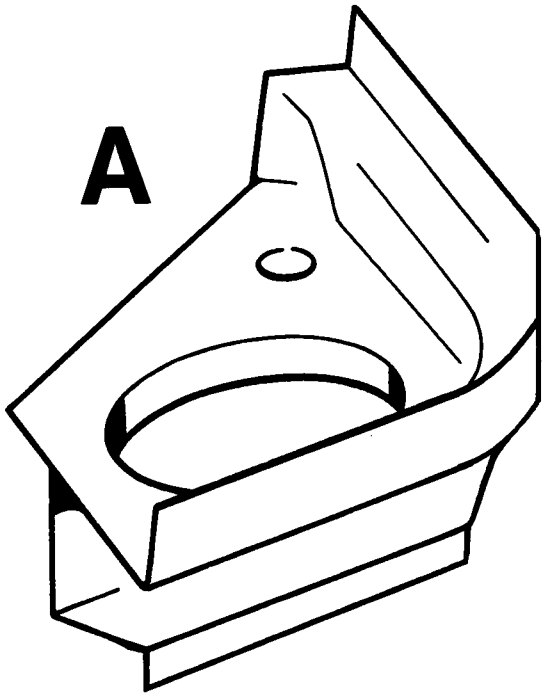

569 - 53

A = Engine mount

Printed in Germany – X, 1990

Renewing engine mount

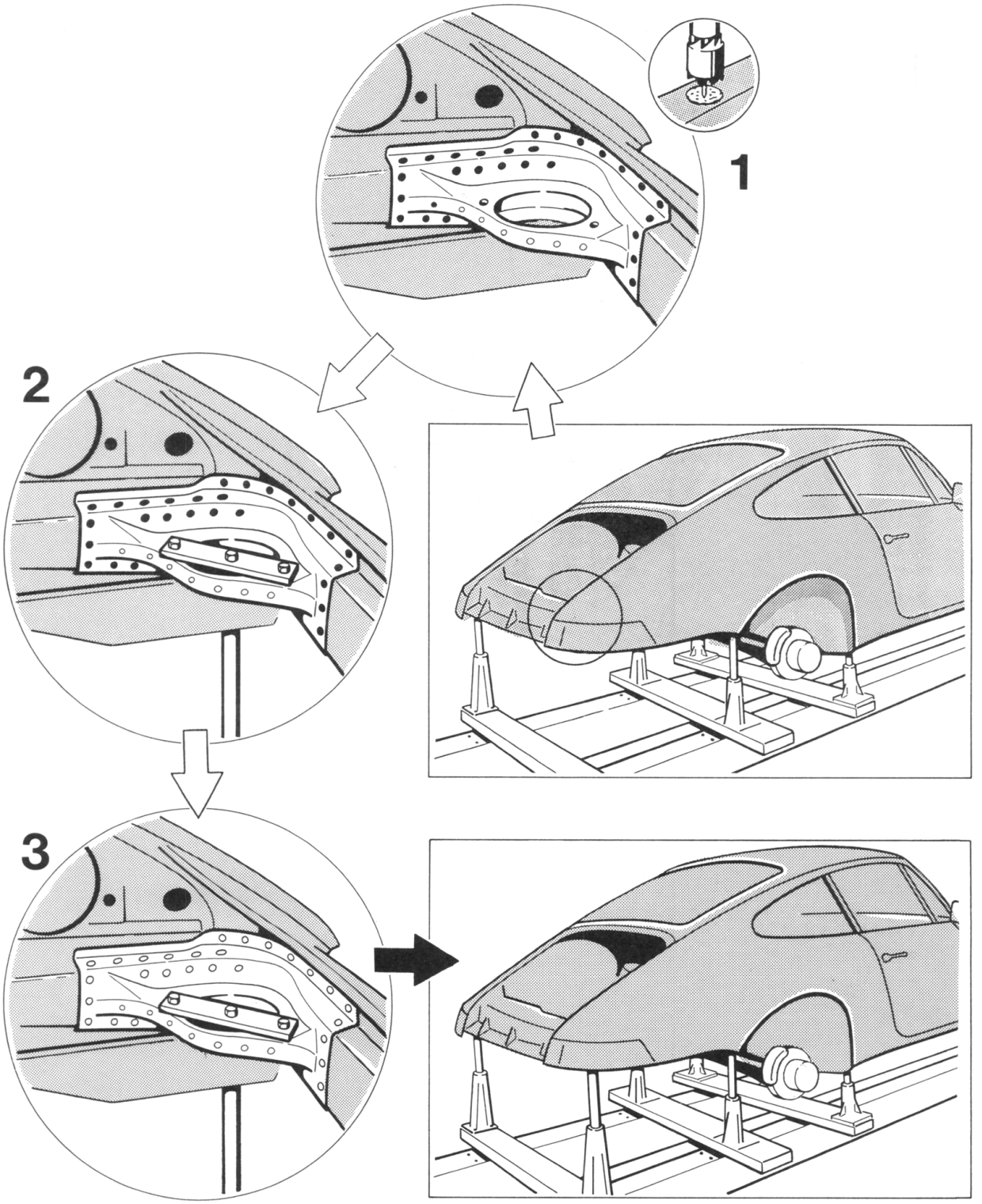

Printed in Germany – X, 1990

Renewing engine mount

Body alignment work in this area must be carried out before the engine mount is renewed.

Remove engine and transmission assembly.

No.	Procedure	Instructions
	Place car on body alignment rig	Mount the car, with mechanical assemblies in place at the front, on the correct set of angles and secure it.
1	Separate the engine mount spot welds	Using a spot weld cutter, separate the spot welds between the engine mount and cross-member and between the engine mount and side member.
	Clean the weld areas	Remove underseal, paint etc. from the weld areas on the side members and cross-member with a hot air blower or rotary brush. Remove factory-applied primer coating from the weld areas on the replacement engine mount with a rotary brush.
2	Prepare engine mount for installation in body	Drill out the engine mount at the connecting points with the side member and cross-member, ready for plug welding. Fit the engine mount into the body. Align the engine mount with the rig aligning angle.
3	Plug weld the engine mount	Plug weld the engine mount to the side member and cross-member by the inert gas method.

Printed in Germany – X, 1990

Partly renewing side panel

For the part-section repair “Partly renewing side panel” the following replacement body parts and special tools are required:

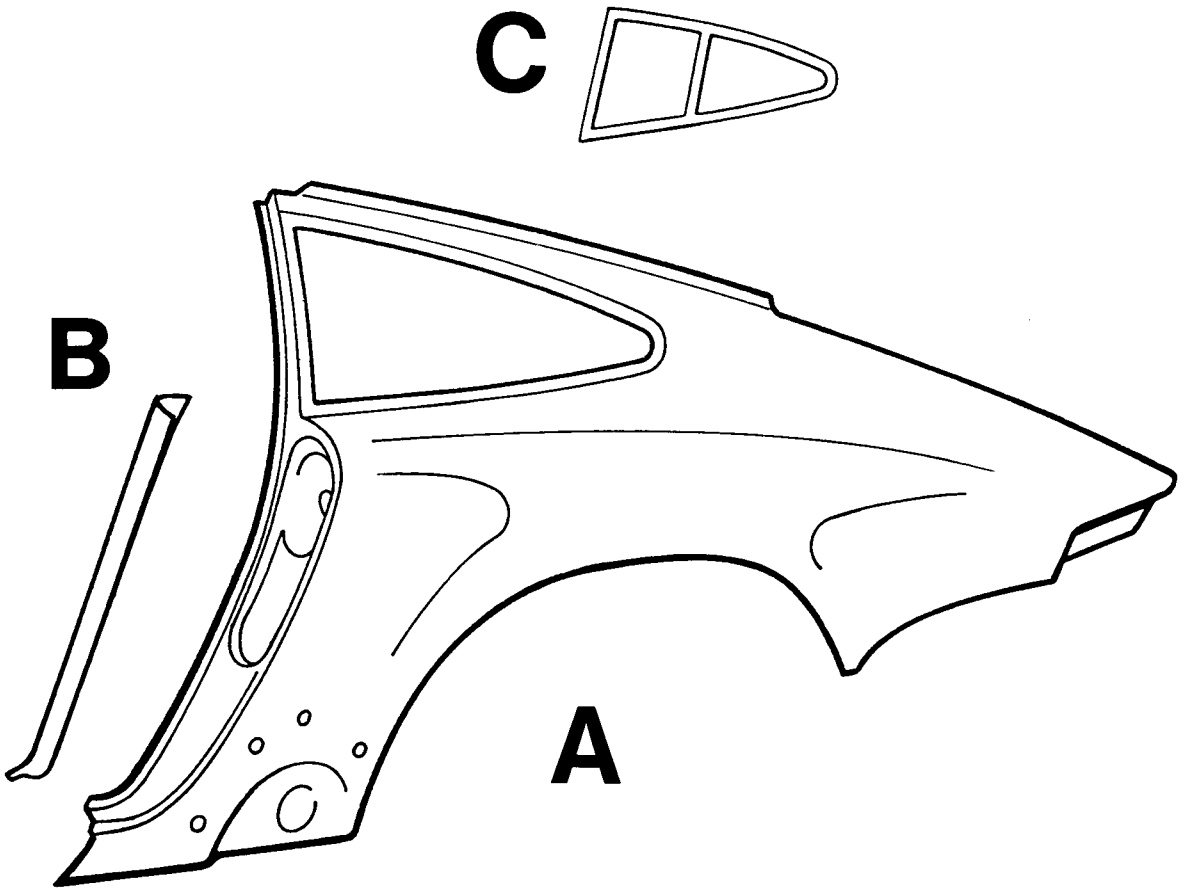

571 - 53

A = Side panel
B = Angled surround
C = Special tool P 854

Printed in Germany – X, 1990

Partly renewing side panel

Partly cut the side panel away from the body

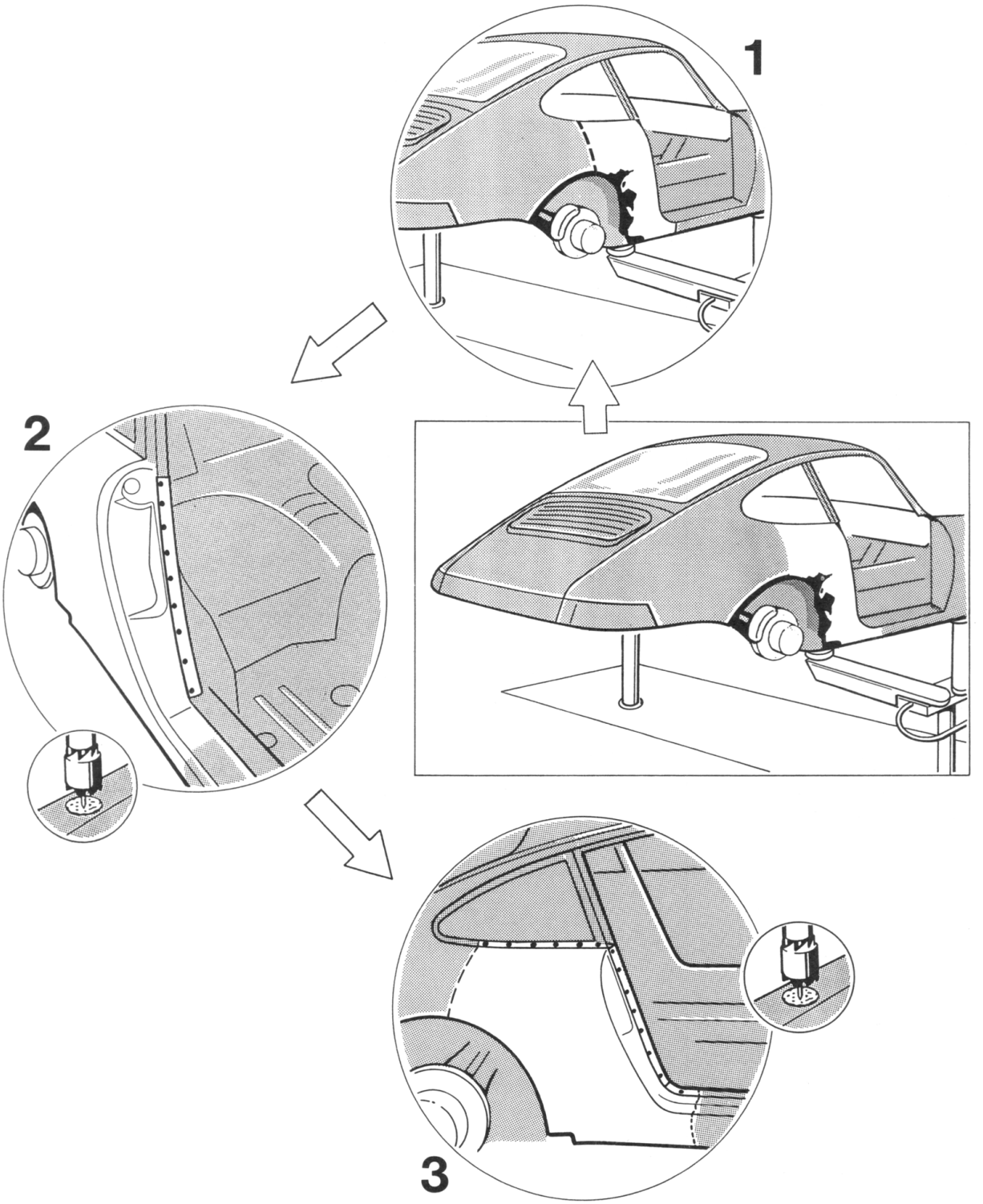

Printed in Germany – X, 1990

Partly renewing side panel

Partly cut the side panel away from the body

Remove all attached equipment and the interior trim, including glass, from the side panel area.

No.	Procedure	Instructions
1	Cut through the side panel	Cut through the side panel with the body panel saw.
2	Separate the spot welds for the angled surround	Separate the spot welds between the angled surround and the side panel with a spot weld cutter.
3	Separate welds at side panel	Separate spot welds between side panel and inner side section and B-post with a spot weld cutter. Grind away inert gas weld seams between the side panel and the door sill and the inert gas weld seam between the side panel and the inner side section (in the B-post area).

Printed in Germany – X, 1990

Partly renewing side panel

Installing side panel in body

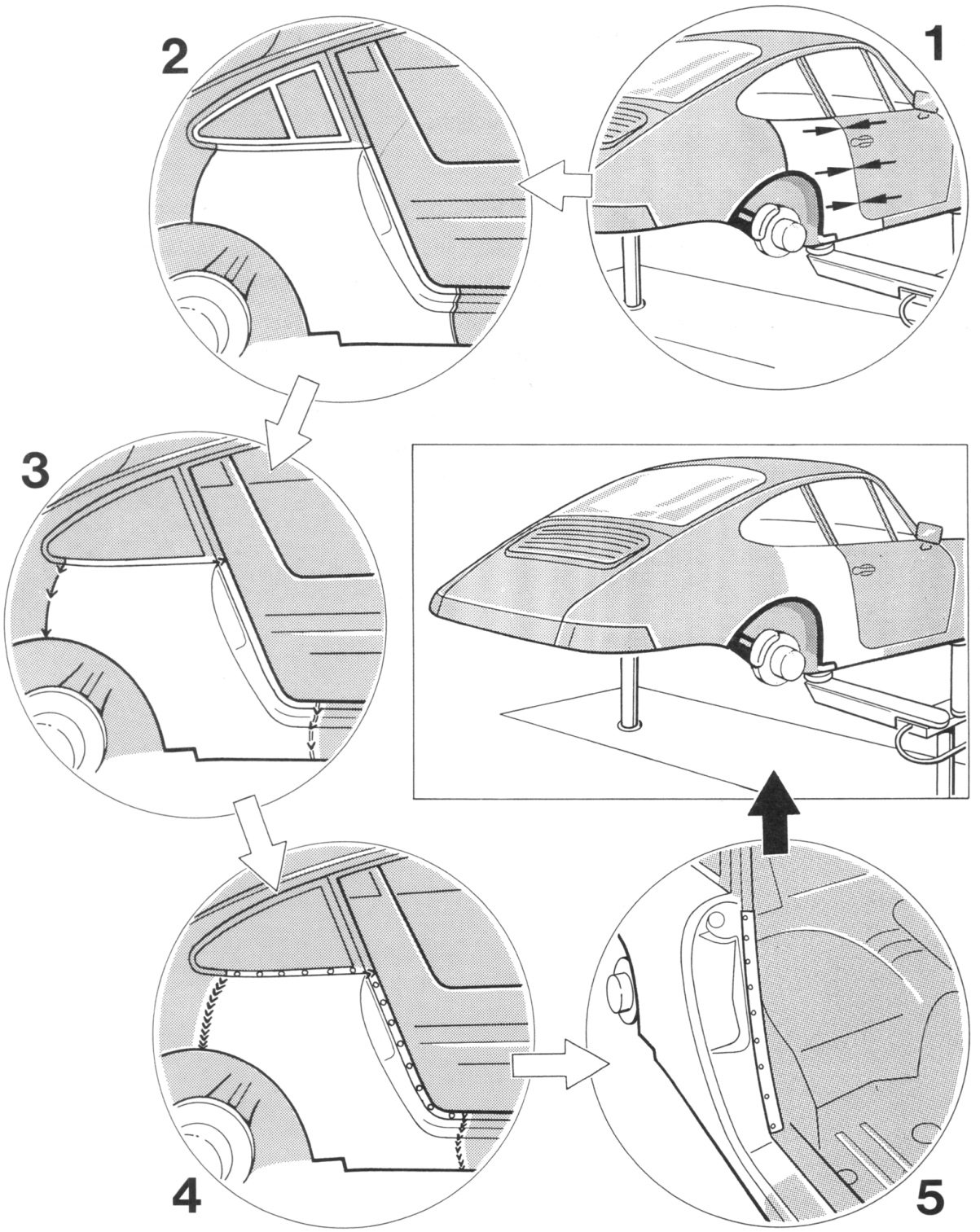

Printed in Germany – X, 1990

Partly renewing side panel

Installing side panel in body

No.	Procedure	Instructions
	Clean the weld areas	Use a hot air blower or rotary brusk to remove under-seal, paint etc. from weld areas on the body. Remove factory-applied primer coating from weld areas on the replacement parts with a rotary brush.
1	Fit the side panel into the body	Make a butt joint between the side panel and the body. Insert the door to check the body contour. The gap between door and body must be parallel all round.
2	Insert special tool P 854	Place special tool P 854 (rear side window template) into the body cutout for the rear side window, and secure to the spot weld flange with clamps.
3	Tack weld the side panel using inert gas	Using the inert gas method, tack weld the side panel to the door sill, inner side section (B-post area) and rear side window spot weld flange. Take out special tool P 854 (rear side window template).
4	Spot and inert-gas weld the side panel	Spot weld the side panel to the inner side section. Using the inert gas method, weld the side panel to the door sill and inner side section with a discontinuous full seam. Butt weld the replacement side panel to the body side panel under inert gas, with a full seam.
	Sand the inert-gas weld seams.	Grind the inert gas weld seams between the side panel and the door sill and the butt weld seam between the replacement side panel and the body side panel.
5	Spot weld the angled surround to the inner side section	

Printed in Germany – X, 1990

Replacing threaded section of oil filler neck

The following body spare parts and adhesives are required for the "Replacing threaded section of oil filler neck" repair operation:

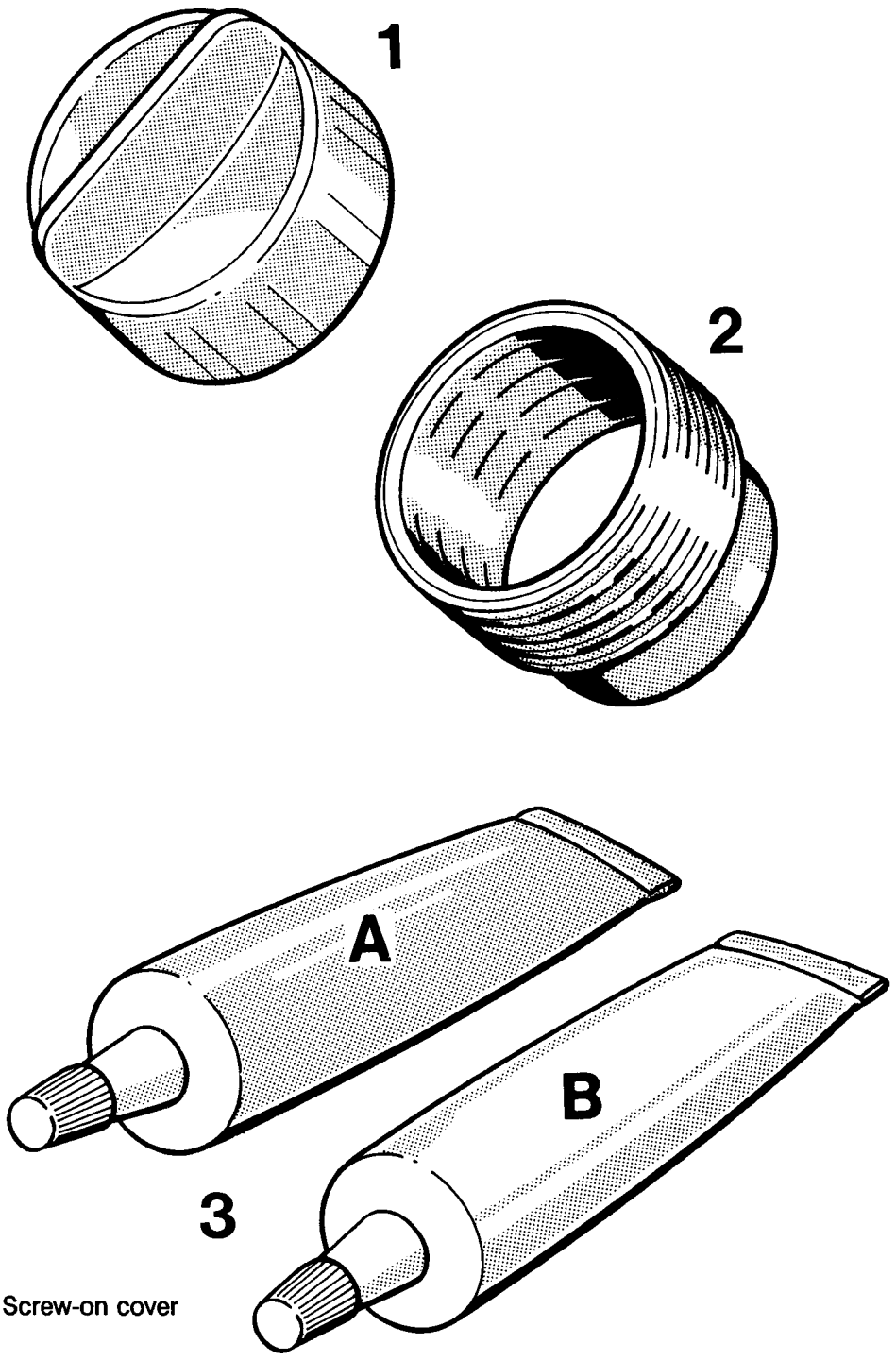

1 = Screw-on cover

2 = Threaded section

3 = Two-pack adhesive

Printed in Germany – XI, 1991

Replacing threaded section of oil filler neck

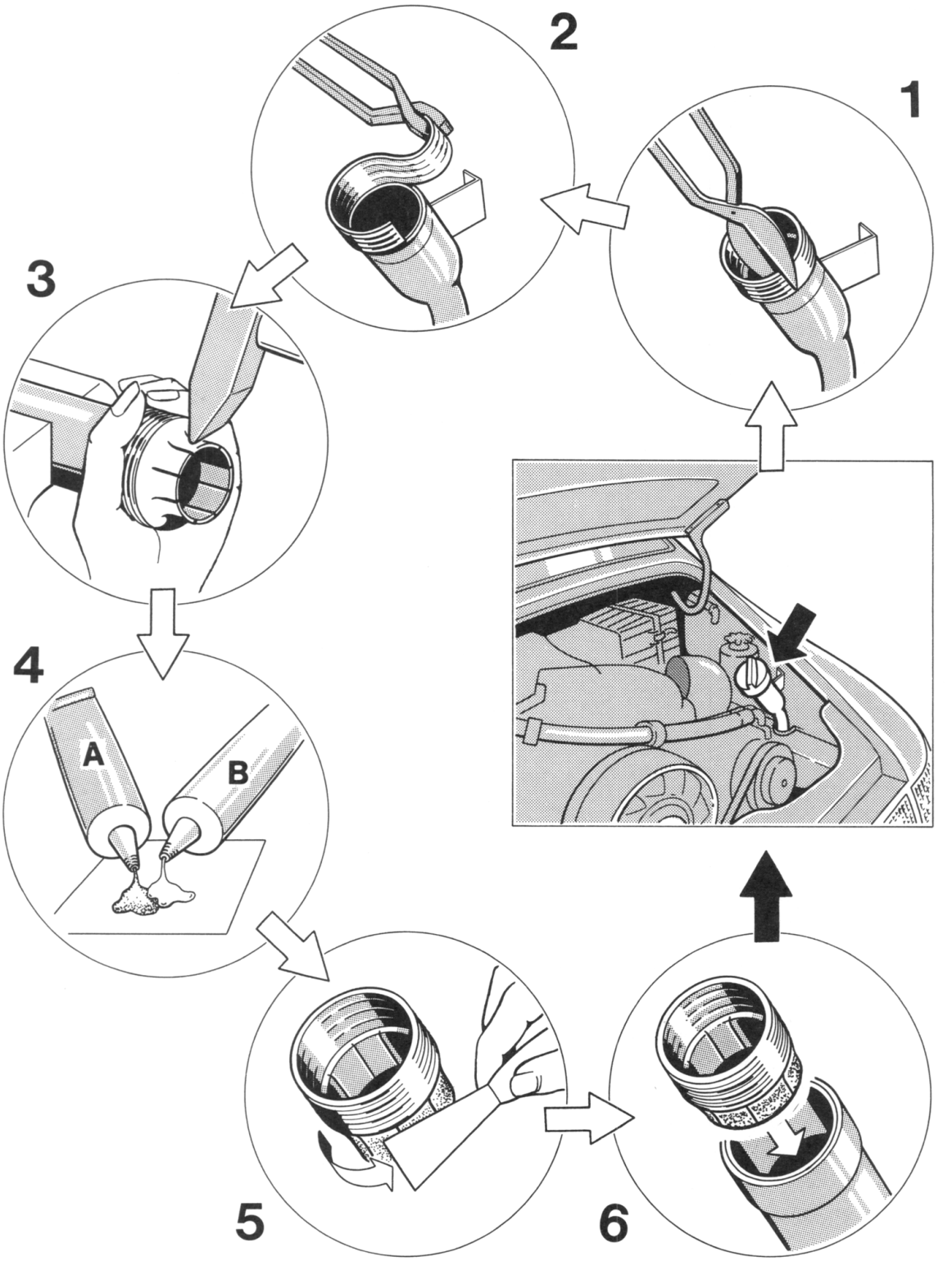

Printed in Germany – XI, 1991

Replacing threaded section of oil filler neck

No.	Procedure	Instructions
	Plug the oil tube aperture	Plug aperture at oil tube in the oil filler neck using e.g. a cloth or a paper ball to prevent ingress of foreign matter.
1	Cut slots into threaded section	Using a sheetmetal cutter, cut threaded section up to the oil filler neck.
2	Tear off threaded section	Using a pair of pliers, tear off threaded section up to the oil filler neck. The brazed part of the threaded section (brazed sleeve) remains on the oil filler neck. Straighten and deburr oil filler neck.
3	Cut in and indent brazed sleeve	Cut in brazed sleeve of spare threaded section twelve times using a nibbler. Indent (taper) cut sleeve using a pipe section until it can be **inserted into** the oil filler neck.
	Clean threaded section and oil filler neck	Use cleaner (benzene) to remove grease, oil, dust etc. from bonding area of spare threaded section and oil filler neck.
4	Mix adhesive	Press out beads of equal length (approx. 3 cm long each) of adhesive components A and B **(mixture ratio 1 : 1)** and mix uniformly. **Note: Setting time is 2 hours!**
5	Apply adhesive on threaded section	Apply a thin coat of thoroughly mixed adhesive on the outside of the indented (tapered) sleeve of the threaded section.
6	Insert threaded section	Insert threaded section into oil filler neck and adjust. Apply remaining adhesive on the outside of the oil filler neck/thread transition area. Spread any adhesive that has squeezed out in the inner area between threaded section and oil filler neck.

Printed in Germany – XI, 1991

Adjusting upper lock section

Adjusting safety catch above upper lock section of front lid for correct position

Operation check

After releasing the lid lock latch, the front lid must be held down by the safety catch.
The safety catch must engage into the retaining bracket of the closing section at its bottommost point.
With the lid open, the return spring must pull back the safety catch to stop against the base-plate of the upper lock section.

Adjusting

Loosen mounting nut (2) of the upper lock section (1).
Adjust upper lock section at the slots in such a manner that the safety catch (3) slides down along the incline of the retaining bracket (4) when the lid is closed.
Tighten mounting nuts to 9.7 Nm (7 ftlb).

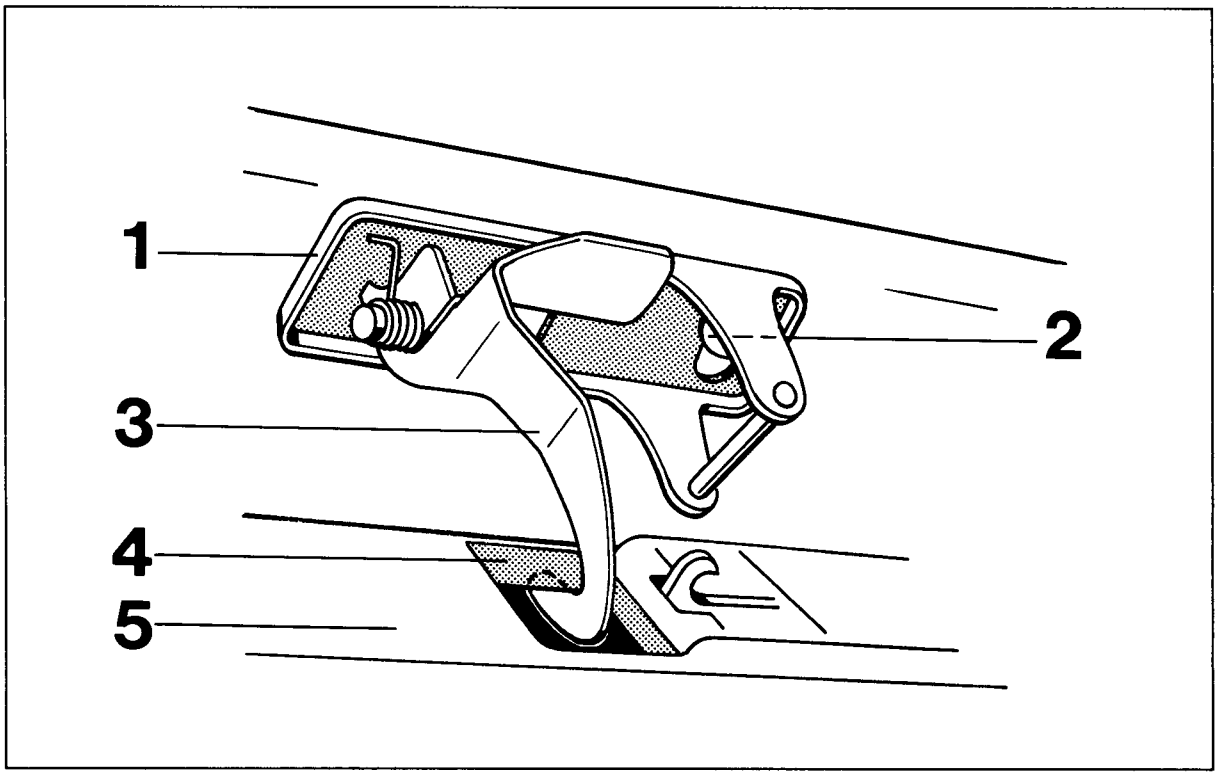

145 - 03

1 = Upper lock section

2 = Mounting nut

3 = Safety catch

4 = Retaining bracket

5 = Closing section

Printed in Germany – XI, 1991

Dismantling and assembling front cover

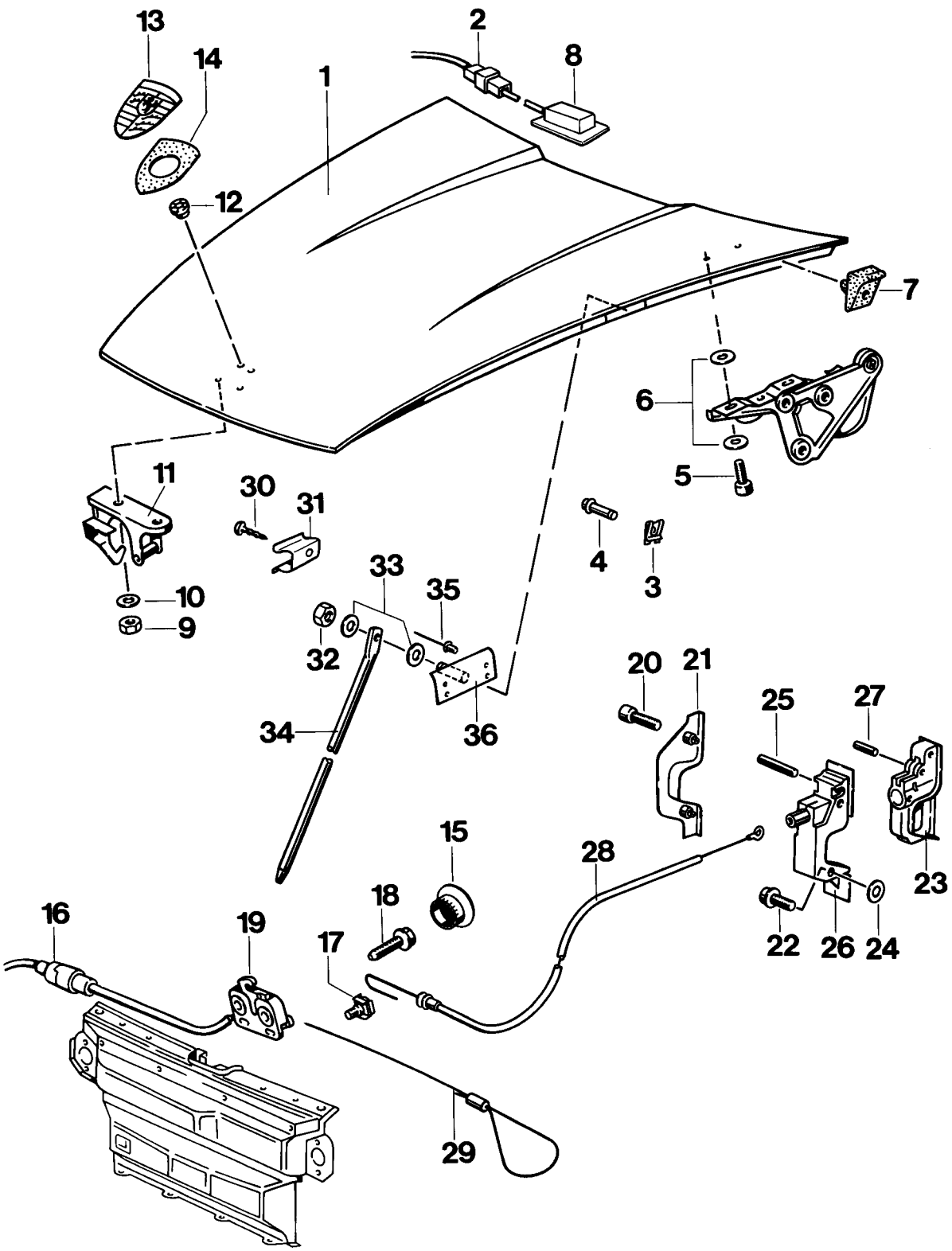

Printed in Germany – XIV, 1991

Dismantling and assembling front cover

No.	Designation	Qty	Note: Removal	Installation
1	Cover			adjust cover at hinges to match contours of cowl panel and fenders
2	Plug and wire	1	disconnect wiring plug for trunk light and remove wire from cable brackets at cover hinge	clip wire into wire bracket and reconnect plug
3	Retainer clips	2	remove retainer clips from retainer pins of gas springs	fit retainer clips
4	Stud	2	press off retainer pins of gas shocks	insert retainer pins of gas shocks
5	Pan-head screws M 8 x 22	4	undo cover mounting screws and remove from cover	place cover on hinges and install complete with washers and pan-head screws
6	Washer A 8.4			Note: When fitting the front cover, make sure the washers are placed correctly between the cover hinges and the cover
7	Bump stop	2	unclip bump stop rubber from cover	clip bump stop rubber back into place
8	Luggage compartment light	1	unclip luggage compartment light from cover and remove from cover complete with wiring	insert luggage compartment light wiring into cover and clip luggage compartment light into cover

Printed in Germany – XIV, 1991

No.	Designation	Qty.	Note: Removal	Installation
9	Nut M 6	2	remove fastening nuts of upper cover lock section	fit lock upper section with correct washers and nuts
10	Washer	2		
11	Cover lock	1	lift upper lock section off the cover	
12	Tapping nut	2	remove fastening nuts of badge on cover	replace
13	Badge on cover	1		
14	Shim	1	take shim off the cover	place shim and badge into cover and tighten with nuts
15	Cover cap	2	unclip caps of mounting screws of lower cover lock section	clip cover caps into place
16	Plug	1	unclip wiring plug for lower lock section from bracket and disconnect plug	reconnect wiring plug for lower lock section and clip plug back into the bracket
17	Clamping bracket	1	undo clamping bracket and fastening screws of Bowden cable and emergency operating cable. Remove Bowden cable and emergency operating cable from lower lock section.	place Bowden cable and emergency operating cable into lower lock section, adjust complete assembly and tighten clamping bracket and fastening screws
18	Combination bolt M 6 x 30	2	remove fastening screws of lower cover lock section	

Printed in Germany – XIV, 1991

No.	Designation	Qty.	Note: Removal	Installation
19	Lower cover lock section	1	remove lower lock section by lowering assembly out of vehicle	place lower lock section into vehicle from below and tighten using the combination bolts
	Bowden cable	1	disconnect Bowden cable from front closing panel	
20	Pan-head screw M 6 x 16	2	remove screws	
21	Covering	1	remove covering towards inside of vehicle	adjust covering and bolt in place with pan-head screws
22	Pan head screws M 6 x 15	2	remove screws	
23	Handle	1	pull handle complete with housing to the rear	put handle with housing into place, using the washers, and fit with pan-head screws
24	Washer A 6,4	2		
25	Roll pin 6 x 36	1	punch out roll pin and take handle out of housing	place handle into housing and locate roll pin
26	Housing	1		
27	Roll pin 4 x 18	1	punch roll pin out of handle and remove from Bowden cable complete with housing	push housing over Bowden cable. Place Bowden cable into handle and reinsert roll pin
28	Bowden cable	1	working from trunk, pull back Bowden cable	working from trunk, route Bowden cable back into passenger compartment
29	Emergency operating cable	1		

Printed in Germany – XIV, 1991

No.	Designation	Qty.	Note: Removal	Installation
			Only for Carrera RS	
30	Sheetmetal screw B 2.9 x 6.5	1	undo sheetmetal screw	
31	Retaining bracket	1		drill retaining bracket from front cover frame to center of screw location – dimension 280 mm – and fit retaining bracket using a B 2.9 x 6.5 sheetmetal screw.
32	Nut M 6	1	remove nut	
33	Washer A 6.4	2		
34	Support	1		
35	Rivet 3.2 x 5.8 (aluminum)	4	drill out rivets	
36	Bracket	1	lift bracket off inside of cover frame	Adjust bracket from rear cover frame to center of screw-in stud – dimension 210 mm – drill and fit with 3.2 x 5.8 rivets

Printed in Germany – XIV, 1991

Dismantling and assembling rear cover

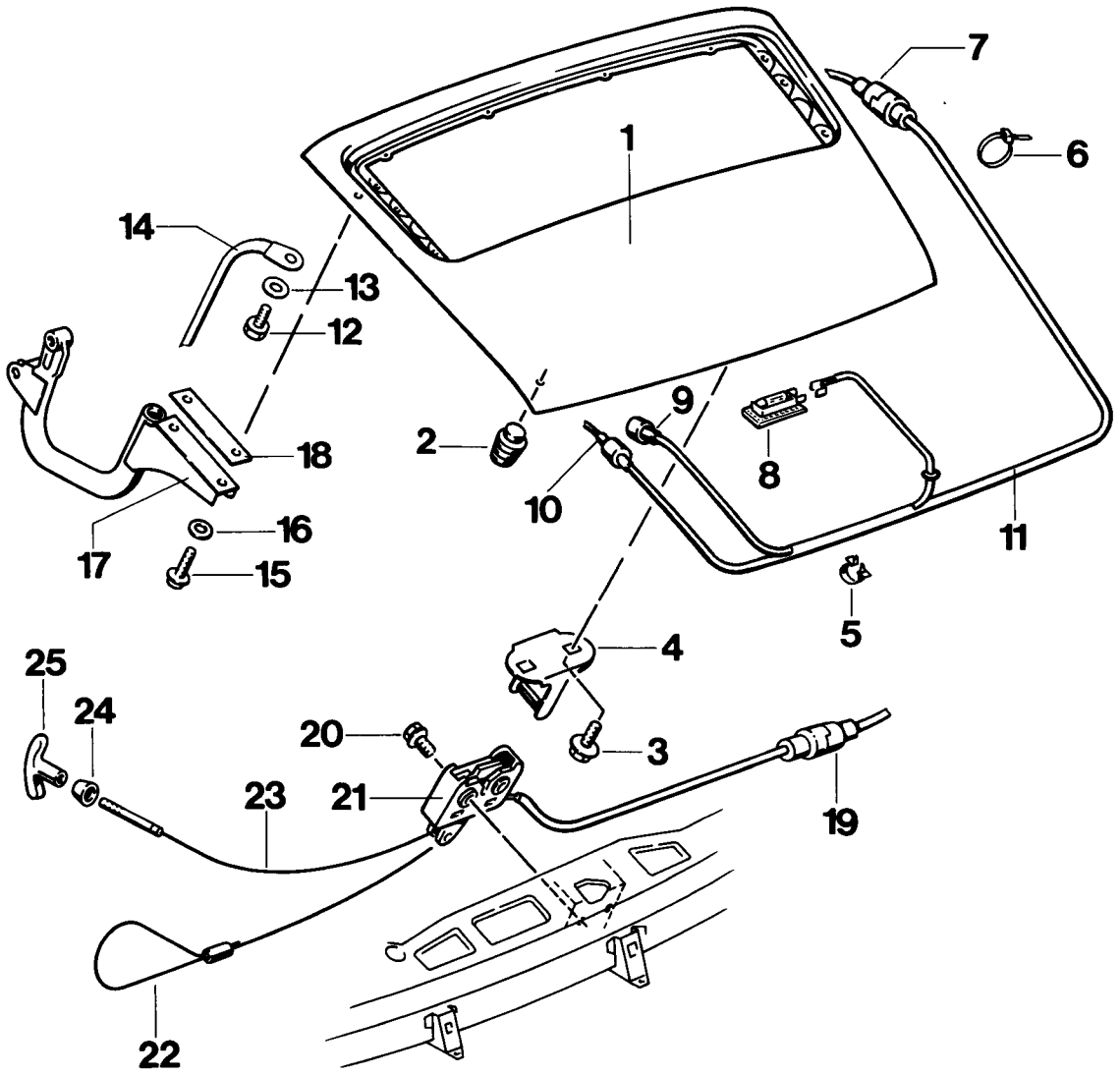

987-55

Printed in Germany – XIV, 1991

Dismantling and assembling rear cover

No.	Designation	Qty.	Note: Removal	Installation
1	Rear cover	1		adjust cover at hinges, lock components and rubber bump stops according to contours of center section and side sections
2	Rubber bump stop	2	remove rubber bump stop from cover	insert rubber bump stop into cover
3	Combination screw M 6 x 18	2	undo	
4	Upper lock section	1	lift upper lock section off the cover	using combination screws, fit upper lock section to cover
5	Wiring bracket	12	unclip wiring bracket	clip wiring bracket into place
6	Tie-wrap	1	remove tie-wrap from hinge	replace tie-wrap
7	Plug	1	remove plug in engine compartment from bracket and disconnect plug connection	reconnect plug and fit plug complete with bracket in engine compartment
8	Engine compartment light	1	unclip engine compartment light from cover and disconnect plug connection	reconnect plugs and clip engine compartment light into cover
9	Plug	1	disconnect plug for spoiler drive motor	reconnect plug for spoiler drive motor
10	Plug	1	unclip plug from cover and disconnect plug connection for spoiler limit switches	reconnect plug for spoiler limit switch and clip plug to cover
11	Wiring harness	1	remove wiring harness from vehicle	route wiring harness in the vehicle

Printed in Germany – XIV, 1991

No.	Designation	Qty.	Note: Removal	Installation
12	Screw	1	undo ground strap fastening screw and remove from vehicle	fit fastening screw complete with washer and ground strap to cover
13	Washer	1		
14	Ground strap	1		
15	Pan-head screw M 6 x 16	4	remove fastening screws and lift cover off the vehicle	place cover on hinges and tighten pan-head bolts with backings and washers in place
16	Washer	4		
17	Hinge	2		
18	Backing	2		
19	Plug	1	unclip wiring plug to lower lock section from bracket and disconnect plug connector	reconnect plug to lower lock section and clip plug into place
	Clamping bracket	1	undo clamping bracket and mounting screws of Bowden cable and emergency operating cable. Remove Bowden cable and emergency operating cable from lower cover lock section	insert Bowden and emergency operating cable into lower cover section. Position clamping bracket and tighten fastening screws
20	Combination screw M 6 x 35	2	remove fastening screws of lower cover lock section	
21	Lower cover lock section	1	working from inside, remove lower cover lock section	insert lower cover lock section into vehicle and fit with combination screws

Printed in Germany – XIV, 1991

No.	Designation	Qty.	Note: Removal	Installation
22	Emergency operating device	1		
23	Bowden cable	1		
24	Spacer sleeve	1		check, replace if defective
25	Handle	1		

Printed in Germany – XIV, 1991

Dismantling and assembling the door

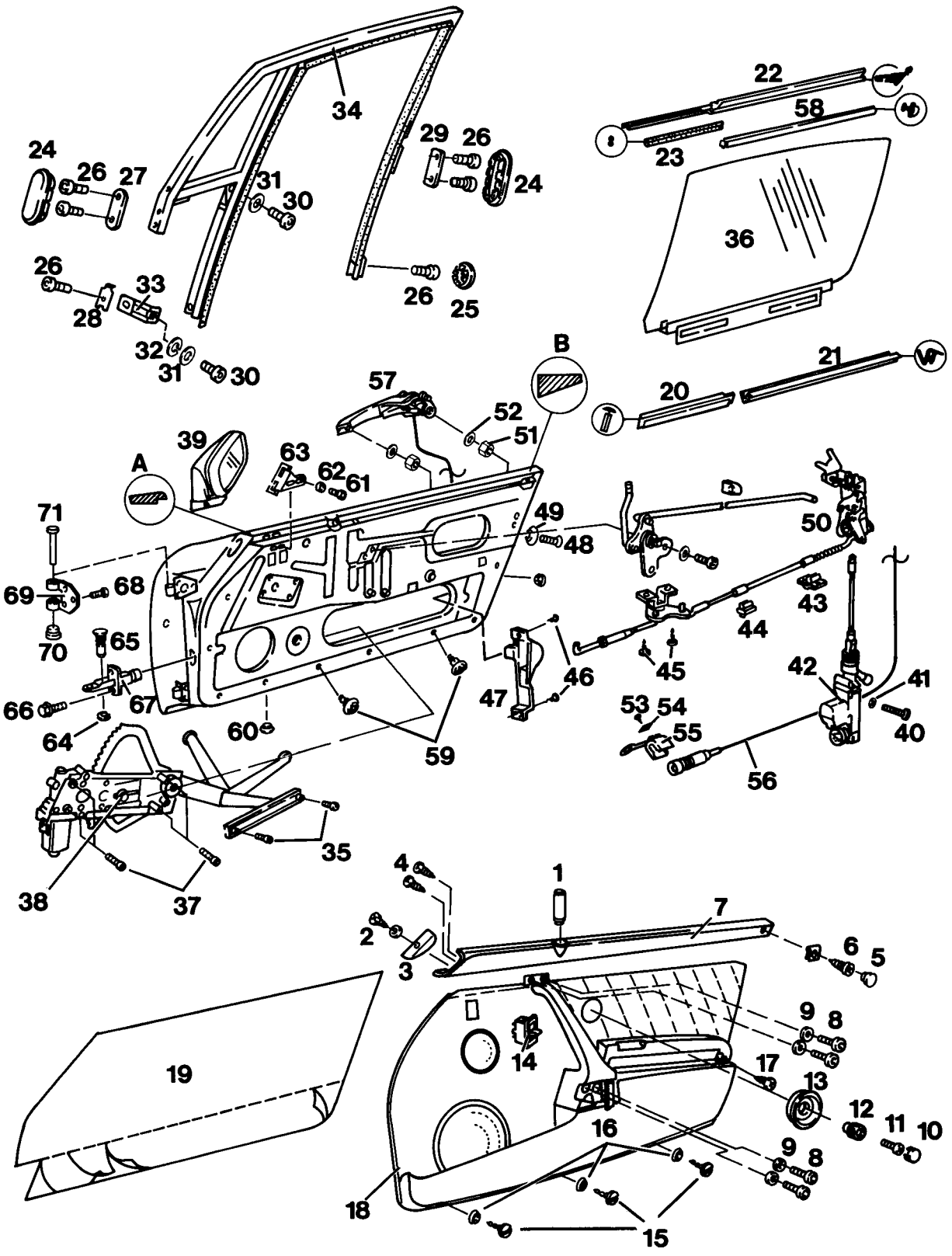

Printed in Germany - XIII, 1991

No.	Designation	Qty.	Note: Removal	Installation
1	Pushbutton	1		
2	Oval-head sheetmetal screw	1		
3	Cap	1		
4	Sheetmetal screw B 4.2 x 13	2		
5	Cap	1		
6	Sheetmetal screw B 3.5 x 13	1		
7	Cover strip	1	Remove and pull connector off coil body	
8	Pan head screw M 6 x 12	4		
9	Washer A 6.4	4		
10	Cap	1		
11	Oval-head screw, micro-seal type M 5 x 12	1		Replace
12	Rotary knob	1		
13	Cover bowl	1	Unbolt	
14	Switch for window regulator control	1	Open door window by 2/3. Pull switch out of door trim panel, pull off connector	
15	Sheetmetal screw B 4.2 x 22	4		
16	Washer for fabric protection	4		
17	Oval-head sheetmetal screw B 4.2 x 19	1		

Printed in Germany - XIII, 1991

No.	Designation	Qty.	Note: Removal	Installation
18	Door trim panel	1	Press off at clips	
19	Adhesive sheet	1		
20	Piping	1		
21	Door gutter seal, inner	1		
22	Molding	1	Detach	
23	Sealing molding	1		
24	Oval cap 57 x 22 x 64	2		
25	Round cap 22 x 28 x 4.7	1		
26	Pan head screw, micro-seal type M 8 x 16	6		Replace. Before tightening the pan head screws, align and adjust door window frame
27	Backing plate	1		
28	Backing	1		
29	Backing plate	1		
30	Pan head screw M 6 x 12	2		Tighten along with pan head screws (26)
31	Washer A 6.4	2		
32	Spring washer	1		
33	Retaining bracket	1		
34	Door window frame	1	Pull out of door	Slide over door window and insert into door

Printed in Germany - XIII, 1991

No.	Designation	Qty.	Removal	Note: Installation
35	Pan head screw, micro-seal type M 6 x 16	2		Replace. After fitting the door window frame, adjust door window and tighten pan head screws
36	Door window	1	Retract out of X-arm and take out of door	
37	Pan head screw, micro-seal type M 6 x 16	4		Replace
38	Power windows	1	Disconnect wiring loom connector and take power windows regulator assembly out of door	
39	Door mirror	1	Remove. Disconnect wiring connector inside mirror and extract wiring from mirror. Undo socket hex bolt and take off mirror	
40	Half-round headed screw	2		
41	Washer	2		
42	Gear element	1	Disengage at door lock and disconnect from wiring loom at connector	
43	Bracket	1		
44	Bracket	1		

Printed in Germany - XIII, 1991

No.	Designation	Qty.	Note: Removal	Installation
45	Oval-head sheetmetal screw, micro-seal type B 3.5 x 13	2		Replace
46	Sheetmetal screw B 3.5 x 13	2		
47	Cover	1		
48	Oval-head screw, micro-seal type M 6 x 16	3		Replace
49	Hollow disc	3		
50	Door lock with bowden cable and return bracket	1		
51	Lock nut M 5	2		Replace
52	Washer A 5.3	2		
53	Sheetmetal screw 3.5 x 6.5	1		
54	Cage nut	1		
55	Lock	1		
56	Microswitch connector	1	Disconnect and expose	
57	Door outer handle	1	Take off with microswitch cable	
58	Door gutter seal	1		
59	Spreader nut	5	For door replacement only	
60	Valve	1	For door replacement only	
61	Pan head screw M 6 x 15	2		

Printed in Germany - XIII, 1991

No.	Designation	Qty.	Note: Removal	Installation
62	Washer A 6.4	2		
63	Angle bracket	1		
64	Retainer clip	1		
65	Stud	1		
66	Hexagon head bolt M 6 x 12	2		
67	Door stay	1		
68	Bolt M 8 x 20	6	Observe installation position of adjusting washers	Observe installation position of adjusting washers
69	Hinge flaps	2		
70	Bushing	2		
71	Hinge bolt	2	Drive out only when replacing the door	Grease
A	Front weld-in panel (shop-made)	1		Only for spare doors
B	Rear weld-in panel (shop-made)	1		Only for spare doors

Printed in Germany - XIII, 1991

Adjusting height stop of door window

Only for Targa and Cabriolet models

As of Model Year 1993

Printed in Germany – XVIII, 1992

Adjusting height stop of door window

Only for Targa and Cabriolet models

As of Model Year 1993

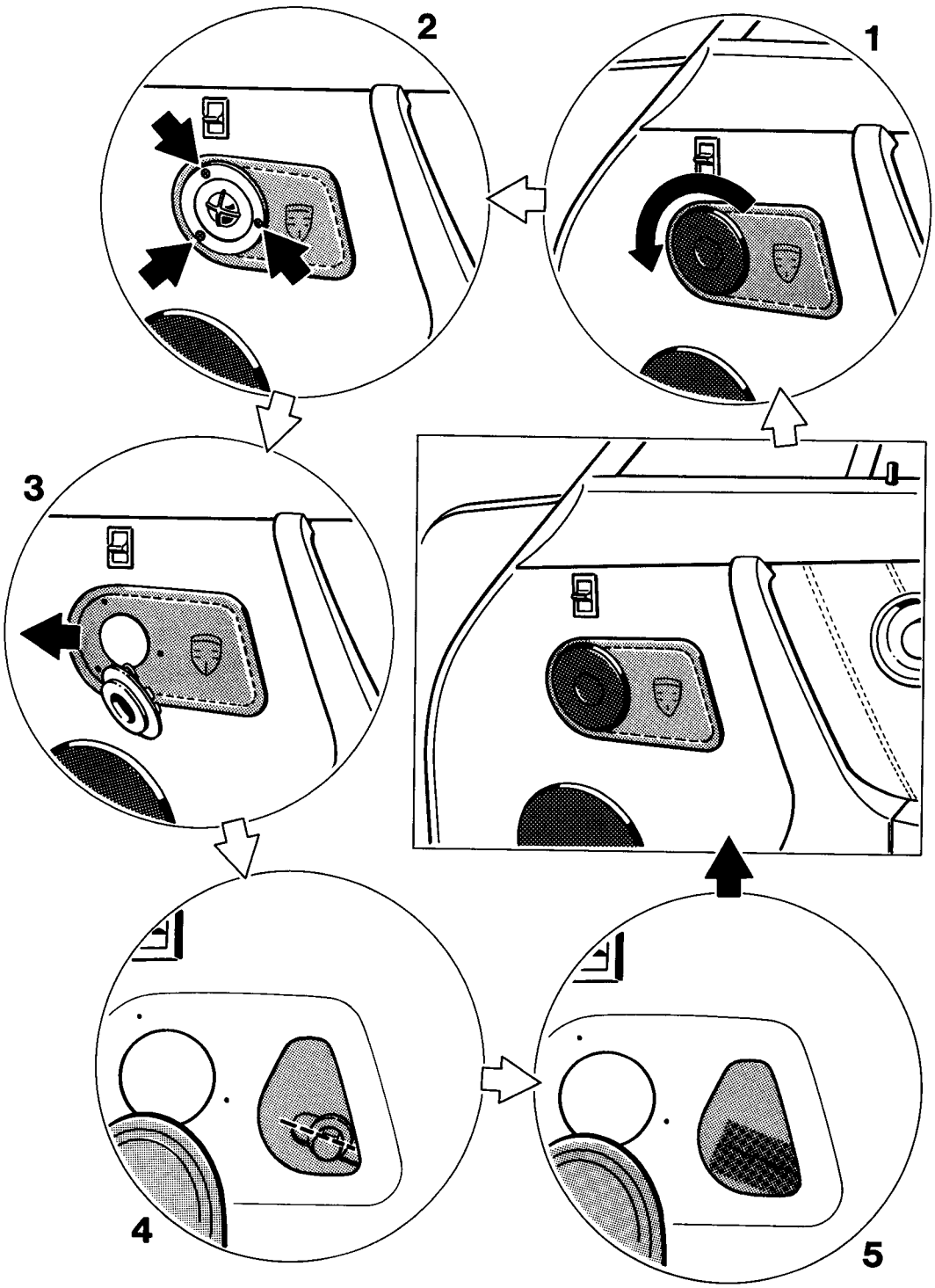

Printed in Germany – XVIII, 1992

Adjusting height stop of door window

Only for Targa and Cabriolet models

As of Model Year 1993

No.	Operation	Instructions
1	Remove speaker grille	Rotate the speaker grille of the tweeter manually and lift it off the speaker.
2	Remove speaker	Remove fastening screws of the tweeter and lift tweeter off the door trim panel.
3	Remove cover molding	Unclip cover molding from door trim panel by pulling it in forward direction.
4	Adjust height stop	Cut out door water deflector sheet in height stop fastening screw area. Loosen fastening screw. Move height stop to the front in direction of travel – door window moves further up. Move height stop to the rear in direction of travel – door window moves further down. Refit fastening screw.
5	Seal water deflector sheet in door	Seal cut-out water deflector sheet with waterproof adhesive tape. Refit cover molding, speaker and speaker grille.

Printed in Germany – XVIII, 1992

Removing and installing front spoiler and bumper

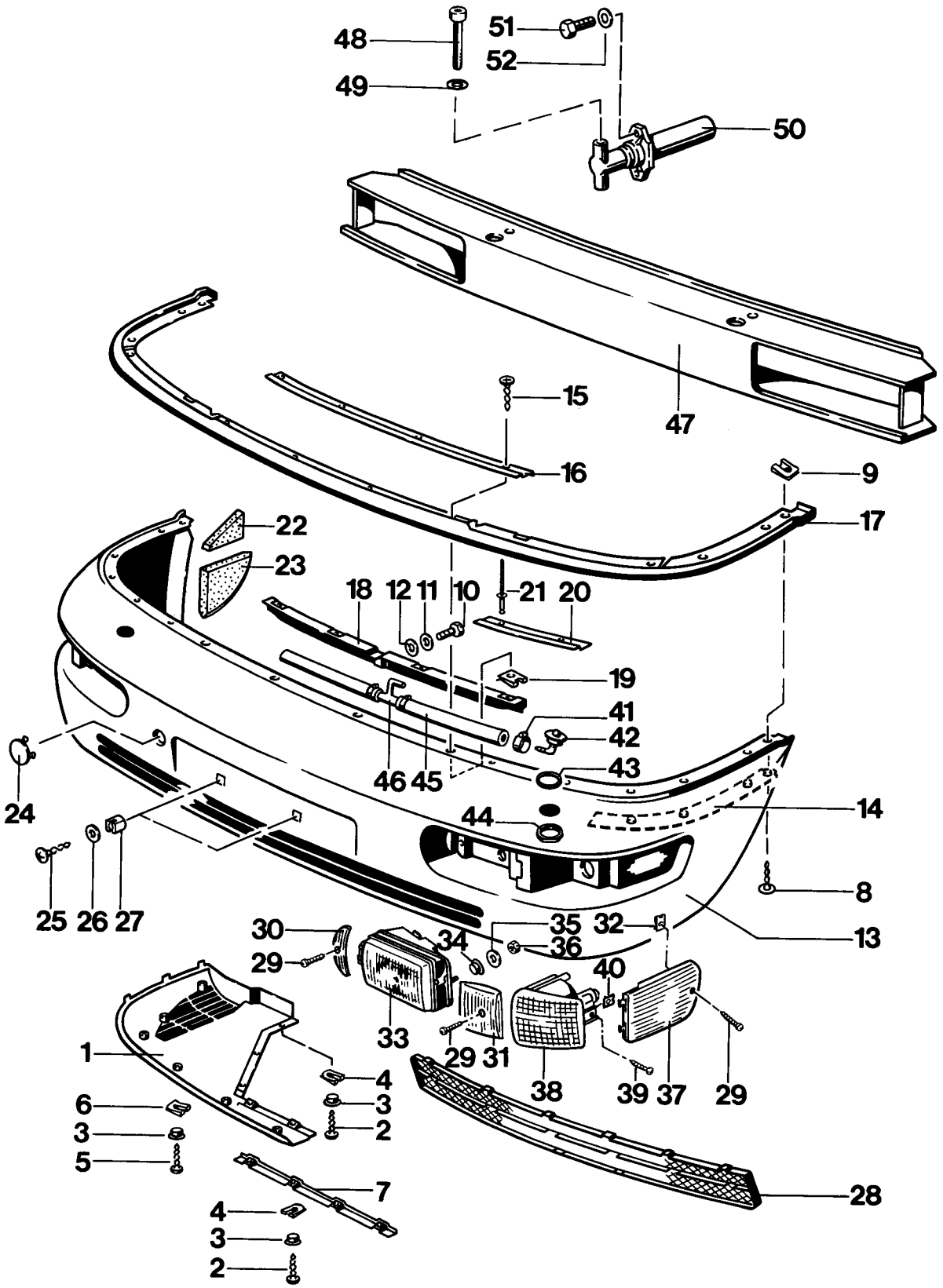

No.	Description	Qty.	Note when: Removing	Installing
			Remove wheel-house halves front left and right	Install wheel-house halves front left and right
1	Spoiler, lower	1		Make sure retaining lugs are fitted correctly when latching in
2	Self-tapping screw B 4.8 x 16	10		
3	Spacer	20		
4	Plate nut B 4.8	14		Adjust to middle of hole
5	Self-tapping screw B 4.2 x 16	14		
6	Plate nut B 4.2	14		Adjust to middle of hole
7	Retaining strip, lower	1		The recesses must point upwards
8	Self-tapp. screw B 4.8 x 22	8		
9	Plate nut B 4.8	8		Adjust to middle of hole
10	Hexagon head screw M 6 x 16	4		
11	Washer B 6.4	4		
12	Plastic washer 5.3 x 16 x 15	4		Check, replace if nec.
13	Spoiler, bumper	1	Separate lug connections for foglamps and turn-signal lamps Drill out fastening rivets in inserts for sealing strip (drill Ø 3 mm)	Reconnect plug connectors Fasten inserts for sealing strip with blind rivets (3.2 x 8). Assemble retaining strip, sealing strip and cover panel before installing in the vehicle
14	Retaining strip, lower	2		Spacers must point upwards
15	Self-tapp. screw B 4.8 x 19	4		
16	Cover rail	1		

Printed in Germany – II, 1989

No.	Description	Qty.	Note when: Removing	Installing
17	Sealing strip	1		Must be level with fender and bumper spoiler
18	Retaining strip, upper	1		
19	Plate nut B 4.8	8		Adjust to middle of hole
20	Insert for sealing strip	2		
21	Mushroom head blind rivet, Al 3.2 x 8	4		
22	Seal, upper	2		Glue in (e.g. with adhesive sealant part No. 999.915.400.40)
23	Seal, lower	2		Glue in (e.g. with adhesive sealant part No. 999.915.400.40)
24	Cap for towing lug	1		Clip into bumper spoiler
25	Oval-head screw BZ 4.2 x 9.5	2		
26	Washer A 4.3	2		
27	Expansion nut B 4.2	2		Check, replace if necessary
28	Air-inlet grill	1	Do not damage retaining lugs on the bumper spoiler	Clip into retaining lugs carefully
29	Screw with washer B 4.2 x 22	2		
30	Cover panel	2		
31	Cover panel	2		
32	Plate nut	2		Adjust to middle of hole
33	Foglamp	2		Fit into bumper spoiler
34	Spacer	4		
35	Washer B 4	4		

Printed in Germany – II, 1989

No.	Description	Qty.	Note when: Removing	Installing
36	Hexagon nut M 5	4		
37	Cover panel	2		Fit into bumper spoiler
38	Turn-signal lamp	2		Fit into bumper spoiler
39	Screw with washer	2		
40	Plate nut	2		Adjust to middle of hole
41	Hose clip	5		
42	Nozzle	2		Fit into bumper spoiler with screw, washer and nut
43	Disk	2		
44	Nut	2		
45	Hose	2		
46	Valve	1		
47	Bumper carrier	1		Check, replace if necessary
48	Fillister head screw M 12 x 110	2		
49	Washer A 13	2		
50	Impact-absorbing tube	2		Apply sealant (e.g. adhesive sealant part No. 999.915.400.40) to the seal before fitting to the flange
51	Hexagon head screw M 8 x 30			
52	Washer A 8.4			

Printed in Germany – II, 1989

Removing and installing the tail panels and bumper

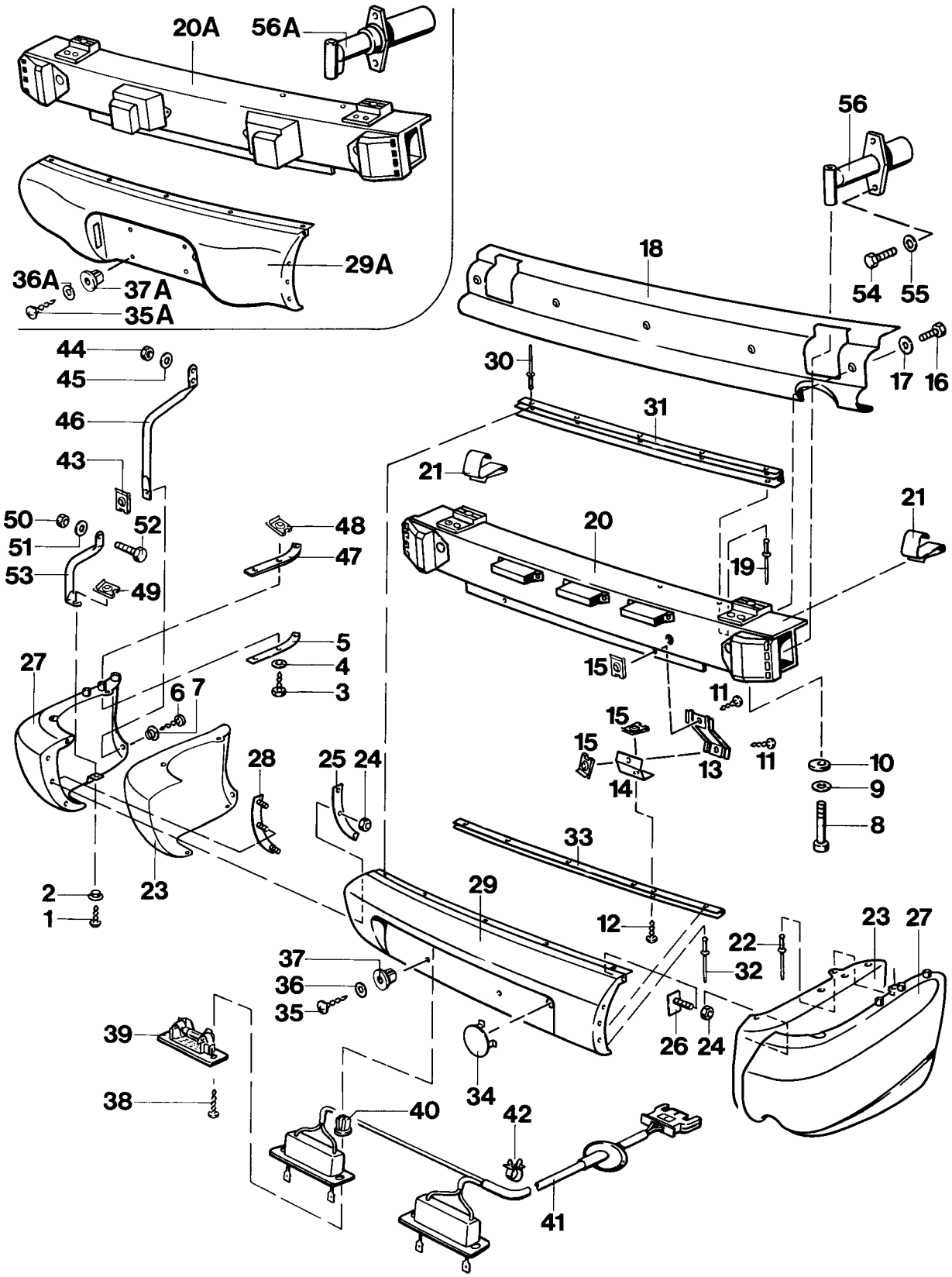

Printed in Germany – V,1989

Removing and installing the tail panels and bumper

Note

The following work steps must be performed before dismantling the tail panels:

– Remove lamp unit on right

– Disconnect plug-in connection for number plate lighting

– Remove exhaust gas end pipe

– Undo cable tie for number plate lighting

No.	Description	Qty.	Note When: Removing	Installing
1	Pan-head tapping screw B 4.8 x 16 bk	4		
2	Spacer disk	4		Insert in the paneling at the side
3	Hexagon sheet metal screw B 4.8 x 19	6		
4	Washer A 5.3	6		
5	Fixing strip	2		
6	Pan-head tapping screw B 4.8 x 16 bk	2		
7	Spacer disk	2		Insert in the paneling at the side
8	Fillister-head screw M 12 x 110	2		
9	Washer A 13	2		
10	Eccentric screw	2		By turning the eccentric washer, it is possible to adapt the tail paneling to the bodywork contour

Printed in Germany – V,1989

No.	Description	Qty.	Note when: Removing	Installing
11	Pan-head tapping screw B 4.8 x 16	4		
12	Pan-head tapping screw B 4.8 x 16 bk	2		
13	Tail support	2		The height of the tail panel can be adjusted by moving the tail support
14	Holder	2		Screw together with reinforcement strip at bottom
15	Plate nut B 4.8	6		Adjust to hole center
16	Hexagon screw M 5 x 12	5		
17	Washer B 5.7	5		
18	Heat protection, center	1		Align to the contour of the tail paneling
19	Blind rivet, mushroom head Al 3.2 x 8	4	Drill out (Ø drill 3 mm)	
20	Bumper	1		Secure holding strip at top with blind rivets (3.2 x 8)
20A	USA variant bumper	1		
21	Spring clip	2	Remove	Fit onto bumper
22	Blind rivet, mushroom head Al 3.2 x 8	8	Drill out (Ø drill 3mm)	
23	Heat protection, side	2		
24	Hexagon nut M 5	8		
25	Fixing plate	2		

Printed in Germany – V,1989

No.	Description	Qty.	Note when: Removing	Installing
26	Fixing plate	2		
27	Panel, side	2		Secure heat protection, side, with blind rivets (3.2 x 8)
28	Fixing plate	2		
29	Panel, middle	1		Secure holding strip at top with blind rivet (3.2 x 8) Secure reinforcement strip at bottom with blind rivets (3.2 x 8)
29A	USA variant panel, center	1		
30	Blind rivet, mushroom head Al 3.2 x 8	5	Drill out (∅ drill 3 mm)	
31	Holding strip, top	1		
32	Blind rivet, mushroom head Al 3.2 x 8	5	Drill out (∅ drill 3 mm)	
33	Reinforcement strip, bottom	1		
34	Cover	1		Carefully clip into the panel, center
35	Oval head screw BZ 4.2 x 9,5	2		
35A	USA variant oval head screw BZ 4.2 x 9,5	4		
36	Washer A 4.3	2		
36A	USA variant washer A 4.3	4		
37	Expanding nut B4.2	2		Check, replace if necessary

Printed in Germany – V,1989

No.	Description	Qty.	Note when: Removing	Installing
37A	USA variant expanding nut B 4.2	4		Check, replace if necessary
38	Sheet metal screw	4		
39	Number plate light	2	Disconnect plug-in connection to wiring harness	Make plug-in connection to wiring harness
40	Expanding nut	4		Check, replace if necessary
41	Cable harness	1		Fix with holding clip
42	Holding clip	2	Carefully unclip	
43	Plate nut B 4.8	2		Adjust to hole center
44	Hexagon nut M 6	4		
45	Washer A 6.4	4		
46	Support tube	2		
47	Weatherstrip	2		Must be flush with fender and tail panel, side
48	Plate nut B 4.8	6		Adjust to hole center
49	Plate nut B 4.8	2		Adjust to hole center
50	Nut M 6	2		
51	Washer B 6.4	2		
52	Screw M 6 x 15	2		
53	Support tube	2		
54	Hexagon screw M 8 x 30	4		
55	Washer A 8.4			
56	Impact tube	2		
56A	USA variant impact absorber	2		

Printed in Germany – V,1989

Removing and installing windows

The following tools and materials are required for removing and installing the windshield, the rear side-windows and the rear window:

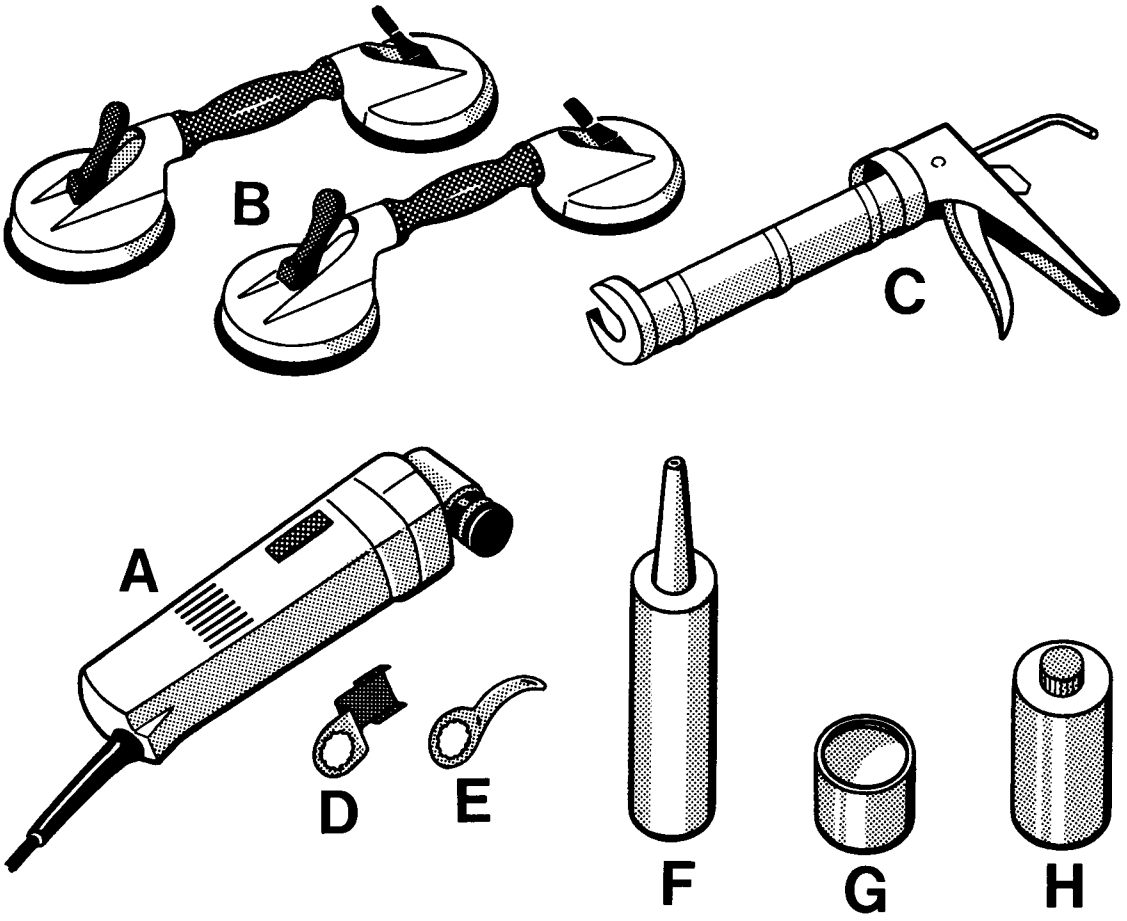

64 - 114

A	Cutter	VAG 1561	VW Werk AG
B	Double-suction cups	VAG 1344	CS equipment sales
C	Glue gun	VAG 1344/1	
D	Scraper	6.39.03.113.02.2	e.g. C & E FEIN GmbH & Co. Postfach 172 7000 Stuttgart 1
E	Angled blade	6.39.03.103.01.7	
F	Adhesive sealant	999.915.400.40	Porsche parts service
G	Body primer	999.915.487.40	
H	Cleaning solution	999.915.478.40	

Printed in Germany – 1988

Removing and installing the windshield

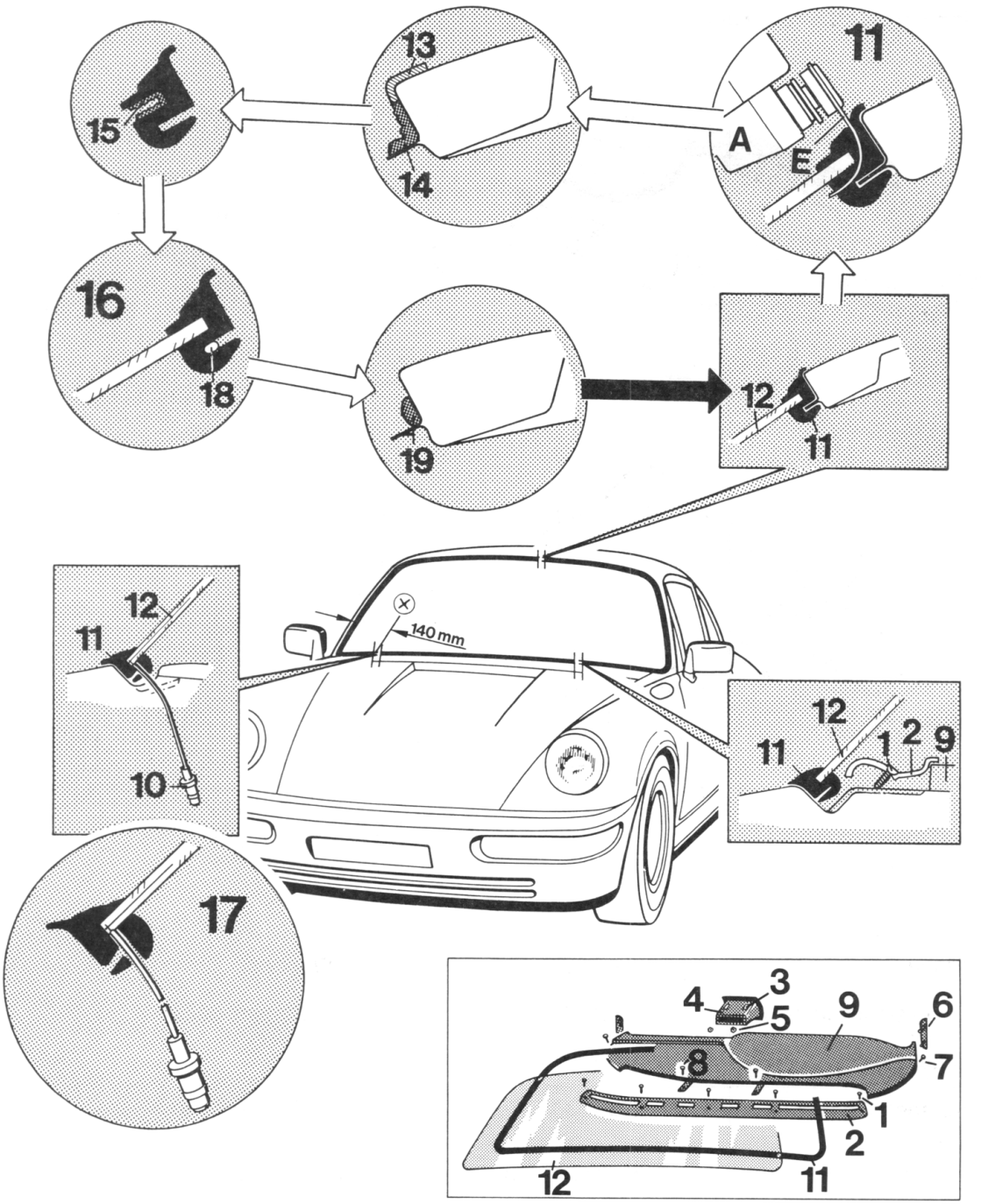

64-115

Printed in Germany – 1988

Removing and installing the windshield

No.	Action	Procedure
	Remove the windshield wiper	Unscrew the hexagon nut, remove spring washer and wiper.
	Open the door window	Lower the door window.
	Remove internal mirror	Remove the interior mirror upwards from the fastening plate parallel to the window.
	Remove defroster panel	Undo 5 countersunk self-tapping screws and remove the defroster panel.
1	- *countersunk screws*	
2	- *defroster panel*	
	Remove the central nozzle	Press 2 fastening nuts downwards and pull out the central nozzle.
3	- *fastening lugs*	
4	- *central nozzle*	
	Remove the upper part of the switchboard	Unscrew a hexagon nut from the threaded bolts for the central switchboard fastening on each side of the recess for the central nozzle. Remove 2 cover panels. Undo the self-tapping screws below the cover panels. Undo 2 self-tapping screws from the top of the switchboard fastening. Remove the upper part of the switchboard.
5	- *hexagon nuts*	
6	- *cover panels*	
7	- *self-tapping screws*	
8	- *self-tapping screws*	
9	- *upper part of switchboard*	
10	Pull off the *windshield antenna plug*	Disconnect the windshield antenna plug from the antenna amplifier. (The antenna amplifier is mounted in the - x - area on the body, under the upper part of the switchboard).
11	Cut through the *rubber seal*	Fit the angled blade (E) into the cutter (A). Sharpen the blade with a grinding stone with the cutter running. Insert the blade into the rubber seal, set the vibration controller to position 6 and cut through the rubber seal between windshield and body all round. **Note:** The windshield antenna cable in the - x - area must not be damaged.

Printed in Germany – 1988

No.	Action	Procedure
12	Remove the *windshield*	
	Remove any rubber from the body	
13	Stick *adhesive tape* to the body	To protect the paintwork, apply adhesive tape to the visible area of the body round the window cutout.
14	Cut away*adhesive sealant* on the body	Fit the scraper (D) to the cutter (A) and cut away the adhesive sealant on the body until a covering residual layer remains.
	Clean the body round the window cutout	Clean the body round the window cutout thoroughly with cleaning solution (H). **Note:** No cleaning solution may remain on the body.
	Apply a coat of primer to any damaged areas on the body	Apply body primer (G) to any lacquer damage round the window cutout which will not be visible.
	Cut away the adhesive sealant on the windshield *(only if the windshield is undamaged)*	Cut away the adhesive sealant from the windshield with a fixed blade. A covering residual layer may remain. **Note:** If the vehicle is fitted with a *Sekuriflex*windshield, under no circumstances may the protective foil on the sealant side be damaged.
	Clean the windshield	Rub the windshield thoroughly with cleaning solution (H). **Note:** No cleaning solution may remain on the windshield.

Printed in Germany – 1988

No.	Action	Procedure
	Check the windshield for notches Inspect	the edge of the windshield all round for damage. If the windshield is damaged and has notches, this must **not** be reinstalled.
	Clean the *rubber seal*	Clean the window channel in the rubber seal with cleaning solution (H) **Note:** No cleaning solution may remain in the window channel.
	Perforate the rubber seal	Perforate the rubber seal in the area of the antenna cable for the cable to pass through (see Item 17).
15	Apply *adhesive sealant* into the window channel of the rubber seal	Insert a cartridge with adhesive sealant (F) into the glue gun (C) and apply the sealant all round the window channel of the rubber seal (you require approx. 85 mm adhesive sealant). **Note:** The windshield must be installed into the vehicle max. 4 hours after the adhesive is applied.
16	Mount the rubber seal onto the windshield	
17	Pull the antenna cable, including plug, through the hole in the rubber seal	
18	Lay an*assembly cord* into the rubber seal	Lay the assembly cord into the rubber seal to fit the windshield. The ends of the cord must cross over around the middle of the roof area.
	Position the double-suction cups to the outside of the windshield	
19	Apply *adhesive sealant* to the body	Using the glue gun (C), apply the adhesive sealant (F) to the body all round the area of the window cutout (approx. 70 ml adhesive sealant).

Printed in Germany – 1988

No.	Action	Procedure
	Mount the windshield into the body	Lay the preassembled, prepared windshield into the window cutout, align and press down with the double-suction cups (B). From inside the vehicle, fit the rubber seal by pulling the assembly cord against the fold in the body.
	Clean the window	Emergent adhesive sealant must be removed immediately and the window area cleaned with cleaning solution (H).
	Connect the windshield antenna plug to the antenna amplifier	
	Install the upper part of the switchboard	Switchboard fastening: 2 self-tapping screws at the top, one self-tapping screw each on the right-hand side and left-hand side, 2 hexagon nuts in the middle. Replace the left and right cover panels.
	Install the central nozzle	Press the fastening lugs downwards and slide the central nozzle into the recess on the switchboard.
	Install the defroster panel	Secure the defroster panel with 5 countersunk self-tapping screws.
	Fit the internal mirror	Slide the internal mirror into the fastening plate parallel to the windshield.
	Install the windshield wipers	Mount the winshield wipers, fit spring washers and secure with hexagon nuts.

Printed in Germany – 1988

Note: Vehicles fitted with Airbag

The following outline conditions must be observed to ensure that the bonded connection is adequately strong for vehicles with Airbag:

Hardening time	10 h
Temperature	at least 15°C
Relative humidity	at least 40%

Should the temperature or relative humidity be lower than these values, the hardening time is longer. These vehicles must not be put into operation before the hardening time has expired.

Vehicles without Airbag may be put into operation after the assembly work has been completed.

Printed in Germany – 1988

Removing and installing the rear side-window

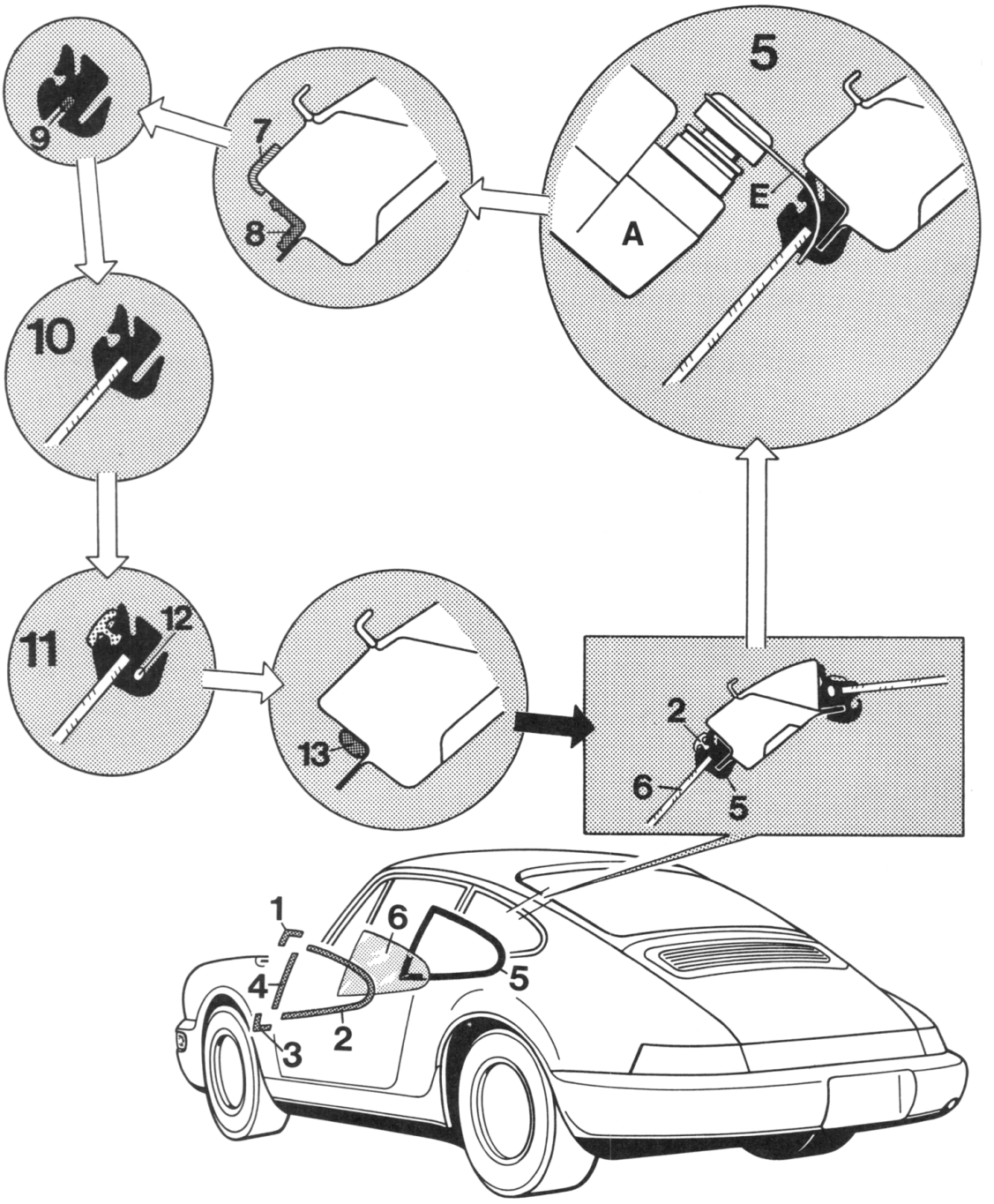

64 - 116

Printed in Germany – 1988

Removing and installing rear side-windows

No.	Action	Procedure
	Remove the trim	Using a wood or plastic spatula, ease the trim around the upper cover plate out of the rubber seal carefully. Lay a cloth between trim and rubber seal and remove the trim by pulling the cloth along the rubber seal.
1	- *upper cover plate*	
2	- *rear trim*	
3	- *lower cover plate*	
4	- *front trim*	
5	Cut through the *rubber seal*	Fit the angled blade (E) into the cutter (A). Sharpen the blade with a grinding stone with the cutter running. Insert the blade into the rubber seal, set the vibration controller to position 6 and cut through the rubber seal between rear side- window and body all round.
6	Remove *rear side-window*	
	Remove any residual rubber from the body	
7	Stick *adhesive tape* to the body	To protect paintwork, cover the body in the visible area of the window cutout with adhesive tape.
8	Cut down *adhesive sealant* on the body	Fit the scraper (D) into the cutter (A) and cut down the adhesive sealant on the body until a covering residual layer remains.
	Clean the body around the window cutout	Clean the body round the window cutout with cleaning solution (H). **Note:** No cleaning solution may remain on the body.

Printed in Germany – 1988

No.	Action	Procedure
	Apply coat of primer to damaged areas on the body	Apply body primer (G) to damaged covering lacquer in areas round the window cutout which will not be visible.
	Cut down the adhesive sealant on the rear side- window	Using a fixed blade, carefully remove the adhesive sealant round the rear side-window. A covering residual layer may remain.
	Clean the rear side-window	Rub down the rear side-window thoroughly with cleaning solution (H) **Note:** No cleaning solution may remain on the window.
	Clean the *rubber seal*	Clean the window channel in the rubber seal with cleaning. solution (H) **Note:** No cleaning solution may remain in the window channel.
9	Apply *adhesive sealant* into the window channel of the rubber seal	Insert a cartridge with adhesive sealant (F) into the glue gun (C) and apply the sealant all round the window channel of the rubber seal. **Note:** The rear side-window must be installed in the vehicle max. 4 hours after the adhesive has been applied.
10	Mount the rubber seal round the rear side-window	
11	Mount the trim onto the rubber seal	Press the rear trim (2) into the rubber seal. Join the front trim (4) to the upper cover plate (1) and lower cover plate (3), press into the rubber seal, join to the rear seal (2) and finally press the complete trim into the rubber seal.
12	Lay an *assembly cord* into the rubber seal	

Printed in Germany – 1988

No.	Action	Procedure
13	Apply *adhesive sealant* to the body	Using the glue gun (C) apply adhesive sealant (F) to the body all round the window cutout.
	Install the rear side-window into the body	Position the assembled, prepared rear side-window into the body cutout, align and press down. From inside the vehicle, fit the rubber seal by pulling out the assembly cord against the fold in the body.
	Clean the window	Emerging adhesive sealant must be removed immediately and the respective area on the window cleaned with cleaning solution (H).

Printed in Germany – 1988

Removing and installing the rear window

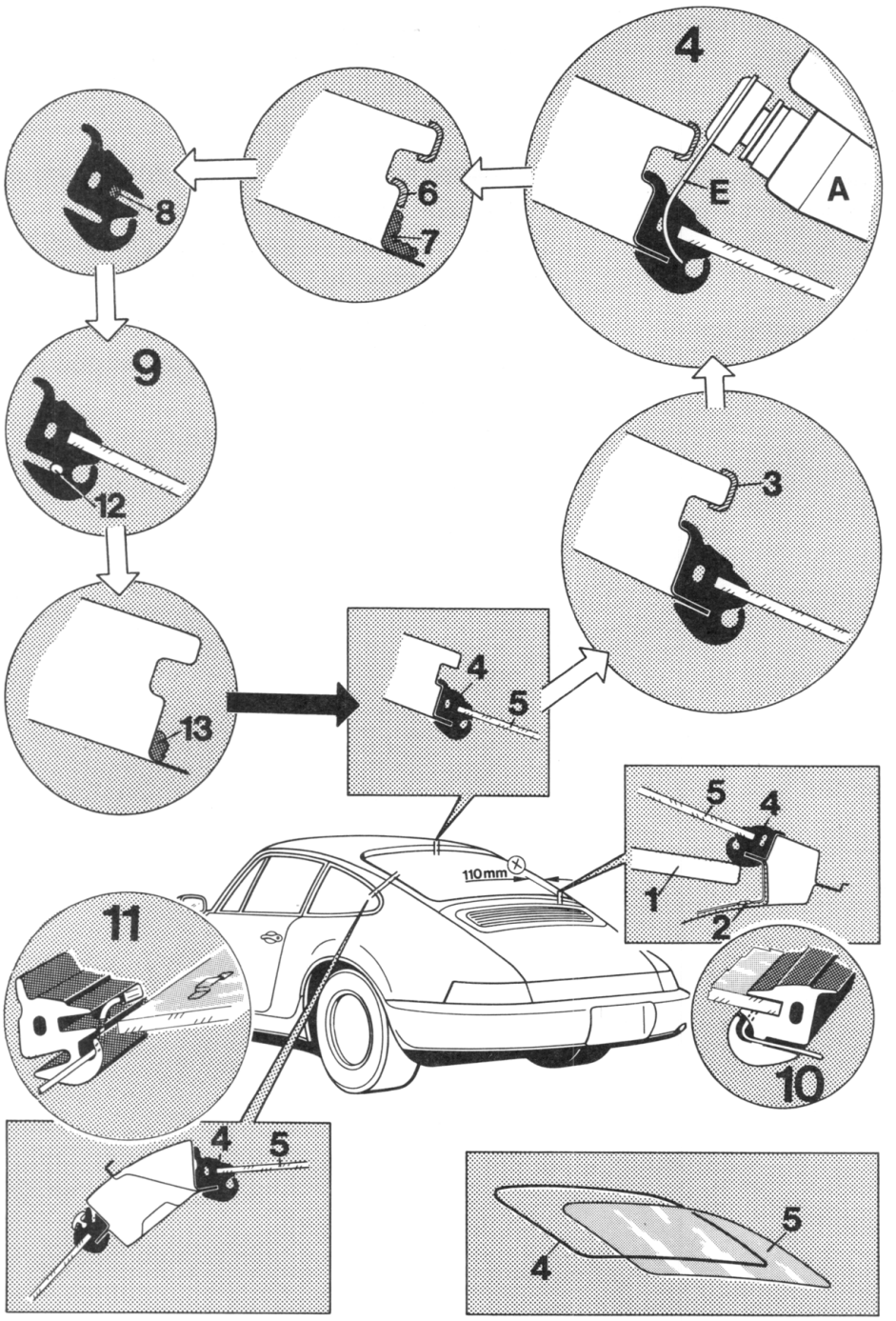

64 - 117

Removing and installing the rear window

No.	Action	Procedure
	Remove the rear wiper	Lift the caps, unscrew the hexagon nut, remove screen washer and upper wiper arm. Remove the sleeve, unscrew the hexagon nut, take out spring washer and lower wiper arm.
	Open the door window	Lower the door window.
1	Remove the *rear wall panel*	Tilt the rear seat-back forwards. Undo the 4 self-tapping screws from the rear wall panel and slide the panel upwards out of the retainer.
2	Separate the *plug connection* for the rear-window defroster	The plug connection for the rear-window defroster is located under the rear wall panel in the area -x-
3	Cover body with *adhesive tape*	To protect the paintwork, apply adhesive tape to the upper roof area of the window cutout.
4	Cut through the *rubber seal*	Fit the angled blade (E) to the cutter (A). Sharpen the blade on a grinding stone with the cutter running. Insert the knife into the rubber seal, set the vibration control to position 6 and cut through the rubber seal between rear window and body all round. **Note:** Do not damage the wiring for the rear window in the - x - area (e.g. heating, high-mounted brake lights).
5	Remove the *rear window*	
	Pull the rubber seal away from the bodywork	
6	Fit *adhesive tape* to the body	To protect the paintwork, fit adhesive tape to the body in the visible area of the window cutout.
7	Cut down the *adhesive sealant* on the body	Fit the scraper (D) into the cutter and cut away the adhesive sealant on the body until a covering residual layer remains.

Printed in Germany – 1988

No.	Action	Procedure
	Clean the window cutout in the body	Clean the window cutout in the body thoroughly with cleaning solution (H). **Note:** No cleaning solution must be left on the body.
	Apply primer to any damaged areas on the body	Apply body primer (G) to any damaged areas in the cover lacquer round the window cutout which will not be visible.
	Separate the plug connection for the rear window wiring	Separate plug connections for the rear window wiring by disconnecting the flat plugs from the sockets at the rear window
	Cut down adhesive sealant on the rear window	Use a fixed blade to carefully cut down the adhesive sealant on the rear window. A covering residual layer of adhesive may remain.
	Clean the window	Rub the rear window thoroughly with cleaning solution (H). **Note:** No cleaning solution may remain on the rear window.
	Check the rear window for notches	Check all round the edge of the rear window for damage. If the rear window is damaged and has notches, this may **not** be reinstalled.
	Clean the *rubber seal*	Clean the window channel in the rubber seal with cleaning solution (H) .**Note:** No cleaning solution may remain in the window channel.
	Perforate the rubber seal (body channel to the cable channel)	Perforate the rubber seal in the - x - area from the body channel to the cable channel for cables to pass through (rear-window defroster) (refer to Item 10).
	Perforate rubber seal (cable channel to the window channel)	Perforate the rubber seal from the cable channel to the window channel in the areas for cable connections to the rear-window defroster (refer to Item 11).
8	Apply *adhesive sealant* to the window channel of the rubber seal.	Fit a cartridge with adhesive sealant (F) into the glue gun (C) and apply all round the window channel of the rubber seal. **Note:** The rear window must be installed into the vehicle max. 4 hours after the adhesive has been applied.

Printed in Germany – 1988

No.	Action	Procedure
9	Fit the rubber seal round the rear window	
10	Pull the cables for the rear-window defroster through the holes in the rubber seal	Pull the cable through the holes from the body channel to the cable channel.
	Lay the cable into the cable channel of the rubber seal according to the connections	
11	Connect the cable to the terminals for the rear-window defroster	Pull the cable through the holes from the cable channel to the window channel and join to the terminals for the rear-window defroster.
12	Lay the *assembly cord* into the rubber seal.	The ends of the cord must cross over around the bottom middle (area of the rear wall panel). In order to align the sealing lip along the roof, lay a second, thinner cord in this area of the rubber seal.
	Position the double-suction cups to the outer side of the rear window	
13	Apply *adhesive sealant* to the body	Using the glue gun (C) apply adhesive sealant all round the window cutout on the body.
	Install the rear window into the body	Lay the rear window into the window cutout of the body, align and press down with the double-suction cup (B). From inside the vehicle, pull the rubber seal in position by pulling the assembly cord against the fold in the body . Align the sealing lip in the roof area by pulling out the second cord.
	Clean the window	Any emergent adhesive sealant must be removed immediately and the area on the window cleaned with cleaning solution (H).

Printed in Germany – 1988

No.	Action	Procedure
	Restore the plug connections for the rear-window defroster	
	Install the rear wall panel	Slide the rear wall panel into the retainer from above and secure with 4 self-tapping screws. The self-tapping screws must have fabric washers. Tilt rear seat-backs upwards. Install rear wiper.
	Mount rubber sleeve,	Fit lower wiper arm, mount spring washer and secure with hexagon nut. Slide on the sleeve, fit other upper wiper arm, mount spring washer and secure with hexagon nut. Close cap .

Printed in Germany – 1988

Bonding the interior rearview mirror in place

The following materials are required for bonding of the complete interior rearview mirror:

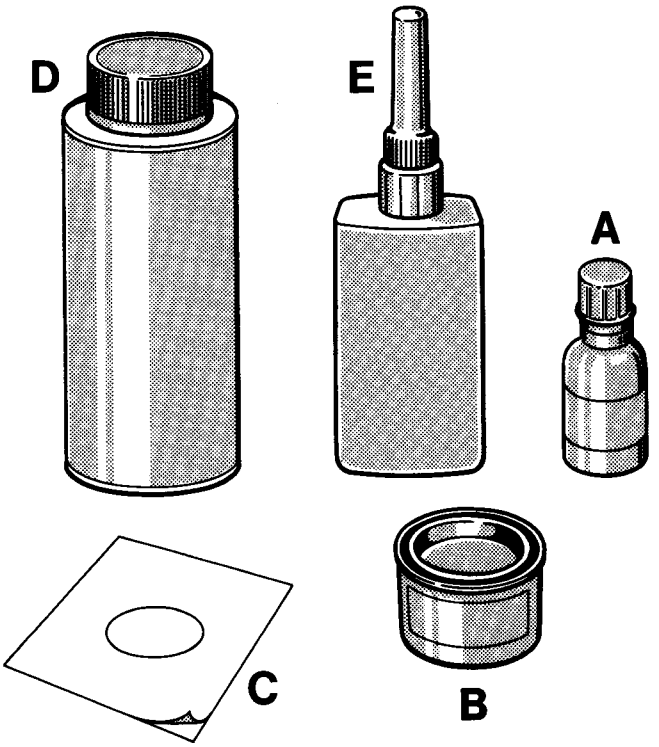

752 - 64

A = **Cleaning solution** (000.043.157.00)*

B = **Primer** (000.043.158.00)*

C = **Cover sheet** (000.043.177.00)*

D = **Activator** (000.043.052.00)*

E = **Adhesive** (000.043.051.00)*

* Porsche part no.

Printed in Germany – XIII, 1991

Bonding the interior rearview mirror in place

Bonding the fully assembled interior mirror to the windshield

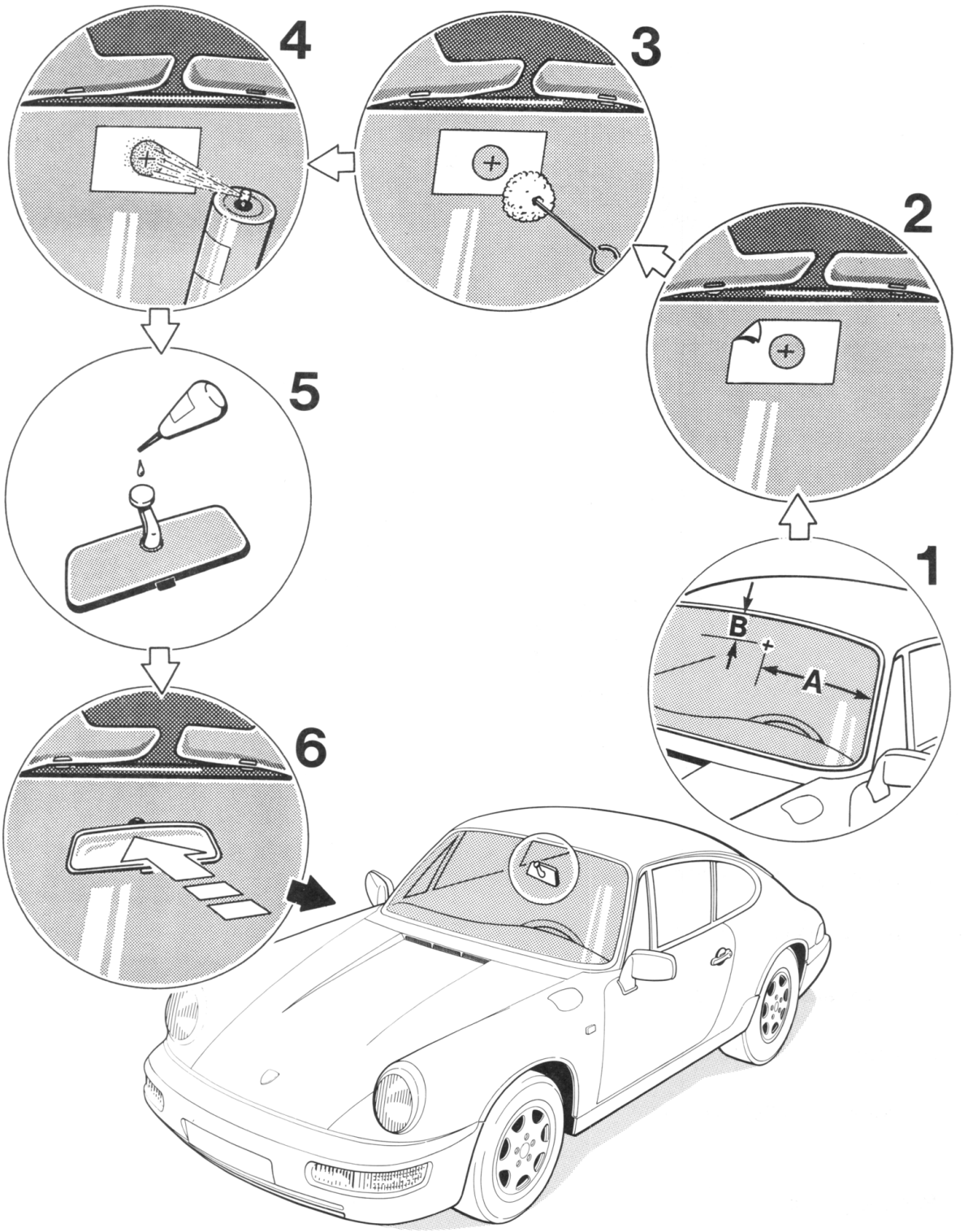

Printed in Germany – XIII, 1991

Bonding the interior rearview mirror in place

Bonding the fully assembled interior mirror to the windshield

No.	Operation	Instructions
1	Mark position of interior rearview mirror	Mark position of adhesive plate on outside of windshield. **Dimension A = 575 mm** **Dimension B = 105 mm**
	Remove adhesive residue	Remove adhesive residue from windshield mechanically using a scraper. Remove adhesive residue from bonding plate of rear-view mirror mechanically using a scraper.
	Roughen bonding plate of rearview mirror	Roughen bonding plate of rearview mirror mechanically using sanding paper.
	Clean bonding plate of rearview mirror	Clean bonding plate of rearview mirror using **cleaning solution** (A).
	Clean bonding area of windshield	Clean bonding area of windshield using **cleaning solution** (A).
2	Mask off bonding area of windshield	Mask off bonding area of windshield using **primer template** (cover sheet C). The position mark of the interior rearview mirror must be visible in the middle of the primer template.
3	Prime bonding area of windshield	Apply a thin coat of **primer** (B) to the masked bonding area of the windshield. **Caution: Allow a flash-off time of 15 to 20 minutes!**

Printed in Germany – XIII, 1991

No.	Operation	Instructions
4	Activate bonding area of windshield	Spray activator (D) onto bonding area of the windshield. **Caution: Allow a flash-off time of 2 minutes!**
	Remove primer template	
5	Apply adhesive to bonding plate	Apply a drop of **adhesive** (E) to the bonding plate of the rearview mirror.
6	Bond rearview mirror in place	Press bonding plate of rearview mirror against primered and activated windshield area. **Note: Press mirror in place for approx. 40 – 50 sec.!**
		Note: **Bonding strength** **60 % after 1 hour** **100 % after 24 hours**

Printed in Germany – XIII, 1991

Body paint colors model 1989 onward

Standard:		Special:	
Grand prix white	908	Silver metallic	980
Black	700	Diamond-blue metallic	697
Dark blue	347	Dove-blue metallic	37B
Indian red	80K	Pebble-grey metallic	693
Linen	60M	Slate metallic	22D
Apricot-beige	548	Velvet-red metallic	81L
Murano green	22C	Linen metallic	550
		Pine-green metallic	22E
		Cognac-brown metallic	40L
		Salmon-silver metallic	81 K

Printed in Germany – III,1989

Body paint colors model 1990 onward

Standard:		Special:	
Grand prix white	908	Silver metallic	980
Black	700	Diamond-blue metallic	697
Dark blue	347	Dove-blue metallic	37B
Indian red	80K	Pebble-grey metallic	693
Linen	60M	Slate metallic	22D
Apricot-beige	548	Velvet-red metallic	81L
Murano green	22C	Linen metallic	550
		Pine-green metallic	22E
		Cognac-brown metallic	40L
		marine blue metallic	35V

Printed in Germany – III,1989

Body Paint Colors Beginning With 1991 Models

Standard Colors:		Special Colors:	
Grand Prix white	908	Polar silver metallic	92 E
Black	700	Polar silver metallic	92 M*
Maritime blue	38B	Horizon blue metallic	37 X
Indian red	80K	Cobalt blue metallic	37 U
Signal green	22S	Oakgreen metallic	22 L
Mint green	22R	Slate gray metallic	22 D
Rubystone red	82N	Slate grey metallic	23 F*
		Coral red metallic	82 H
		Black pearl effect	738
		Midnight blue metallic	37 W
		Midnight blue pearl effect	39 C*
		Amethyst pearl effect	38 A
		Amethyst pearl effect	83 K*
		Amazon green pearl effect	37 Z
		Amazon green pearl effect	39 A

* = Water-base paints

Water base paints are applied exclusively by the manufacturer during production spraying. For repair of watwer-base paints, conventional respray paints matching the color of the original paint are used. I.e. the only prerequisite for resprays is that the correct respray paint is used (refer to Paint Manual, page L3 - 25). Color differences due to paint application do no occur.

Printed in Germany – XV, 1992

Body Paint Colors Beginning With 1992 Models

Standard Colors:	
Grand Prix white	908
Black	700
Maritime blue	38B
Indian red	80K
Signal green	22S
Mint green	22R
Rubystone red	82N

Special Colors:	
Polar silver metallic	92 E
Polar silver metallic	92 M*
Horizon blue metallic	37 X
Cobalt blue metallic	37 U
Oakgreen metallic	22 L
Slate gray metallic	22 D
Slate grey metallic	23 F*
Coral red metallic	82 H
Black pearl effect	738
Midnight blue metallic	37 W
Midnight blue metallci	39C*
Amethyst pearl effect	38 A
Amethyst pearl effect	83 K*
Amazon green pearl effect	39 A

* = Water-base paints

Printed in Germany – XV, 1992

Removing and Installing Rear Spoiler

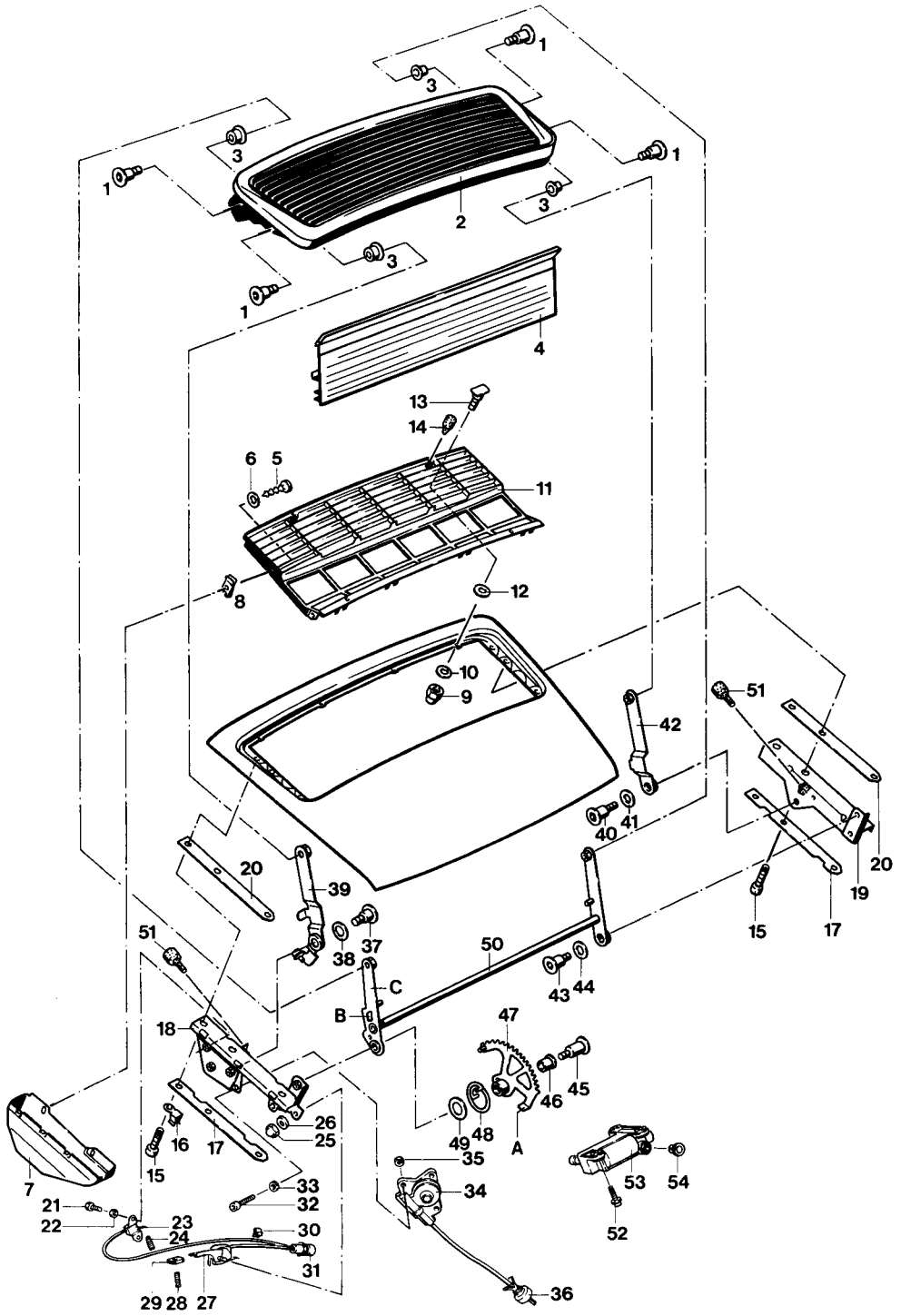

66 - 262

No.	Description	Qty.	Note When: Removing	Installing
1	Shaft bolt, micro-encapsulated M 6 x 24	4		Replace
2	Rear spoiler	1		
3	Bearing sleeve 17 x 7 POM	4	Press out toward inside	
4	Rear wall	1		Insert between rear spoiler (2) and air inlet grill (11)
5	Oval hd. self-tapping screw B 4.2 x 9.5	2		
6	Washer A 4.3	2		
7	Cover	1		
8	Self-tapping nut B 4.2	2		
9	Capped nut M 5	8		
10	Washer A 5.3	8		
11	Air inlet grill	1		Align air inlet grill (11) to contour of the rear lid after installation
12	Washer 9 x 15 x 2	8		
13	Screw M 5 x 8 x 13.5	8		
14	Stop for rear spoiler	4		
15	Fillister head screw M 6 x 15	8		
16	Electric lead holder	1		
17	Liner	2		

Printed in Germany – III,1989

No.	Description	Qty.	Note When: Removing	Note When: Installing
18	Take-up plate	1		
19	Take-up plate	1		
20	Liner	6		The distance between the rear spoiler and rear lid can be adjusted by inserting liners (up to 3 on each side) between the take-up plates and rear lid.
21	Hexagon head screw M 5	2		
22	Washer A 5.3	2		
23	Microswitch	1		See adjusting rear spoiler
24	Stud	1		
25	Hexagon nut M 5	1		
26	Washer A 5.3	1		
27	Microswitch	1		See adjusting rear spoiler
28	Stud	1		
29	Plate nut	1		
30	Electric lead terminal	3		
31	Plug	1		Produce plug connection on wire harness
32	Fillister head screw M 6 x 12	3		
33	Washer A 6.4	3		

Printed in Germany – III,1989

No.	Description	Qty.	Note When: Removing	Installing
34	Gearbox	1		Teeth of gearbox (34) must engage in teeth of arced tooth element (47)
35	Hexgon nut BM 6	3		
36	Input shaft	1		Insert input shaft (36) with sleeve for gearbox motor (54) in gearbox motor (53)
37	Shaft bolt, micro-encapsulated M 6 x 19	1		Replace
38	Washer, black	1		
39	Lever	1		
40	Shaft bolt, micro-encapsulated M 6 x 19	1		Replace
41	Washer, black	1		
42	Lever	1		
43	Shaft bolt, micro-encapsulated M 6 x 17	1		Replace
44	Washer, black	1		
45	Shaft bolt, micro-encapsulated M 6 x 27	1		Replace
46	Bearing sleeve 16 x 18.5 POM	1		

Printed in Germany – III,1989

No.	Description	Qty.	Note When: Removing	Installing
47	Arced toothed element	1		Insert tab (A) of arced toothed element (47) in opening (B) of guide lever (C) on linkage (50)
48	Spring	1		
49	Washer, black	1		
50	Linkage	1		
51	Pad 5 x 10 x18.5	2		
52	Combination screw M 6 x 18	3		
53	Gearbox motor	1		
54	Sleeve for gearbox motor	1		
A	Tab on arced tooth element	1		
B	Opening in guide lever	1		
C	Guide lever on linkage	1		

Printed in Germany – III,1989

Adjusting Rear Spoiler

The rear spoiler running out and running in travel can be limited and therefore adjusted by determining the switching points of two micro-switches.

Adjusting Micro-switch for Spoiler Running In

Operate the service switch to run in the spoiler until tab (A) of the arced tooth element (47) is disconnected in opening (B) of guide lever (C). Unscrew hexagon nut (25). Adjust the switching point of micro-switch (27) on stud (28). Tighten hexagon nut (25) again. Recheck adjustment by operating the service switch.

Adjusting Micro-switch for Spoiler Running Out

Operate the service switch to run out the spoiler until lever (39) touches pad (51). Adjust the switching point of micro-switch (23) on stud (24). Recheck adjustment by operating the service switch.

Printed in Germany – III,1989

Removing and installing the sill cover

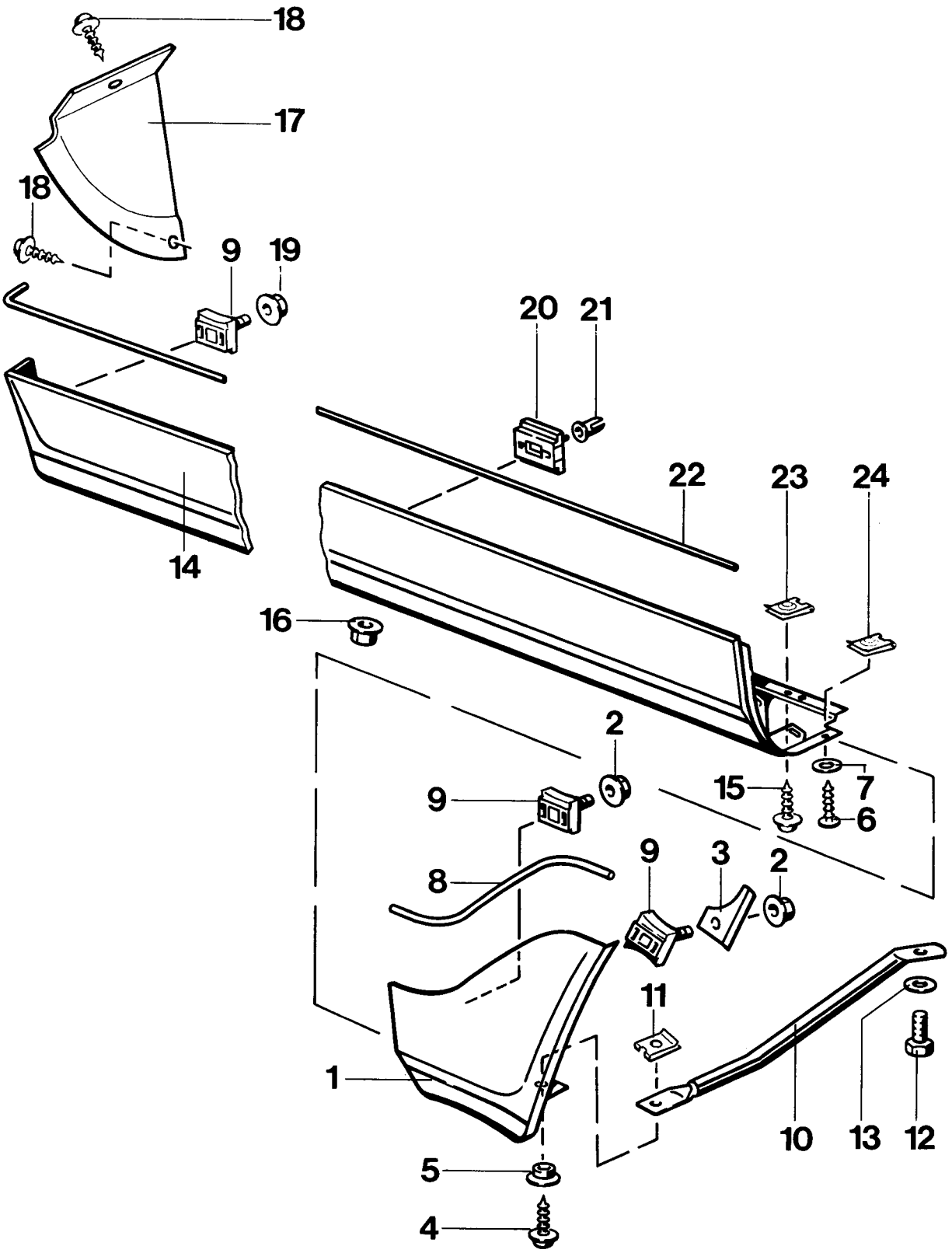

Printed in Germany – V,1989

Removing and installing the sill cover

No.	Description	Qty.	Note when: Removing	Installing
1	Sill cover	2		
2	Plastic nut	4		Check, replace if necessary
3	Clamping piece	2		Ensure correct seating
4	Sheet metal screw with washer assembly 4.8 x 16	2		
5	Spacer disk	2		
6	Sheet metal screw 4.8 x 16	2		
7	Plain washer A 5.3	2		
8	Cover strip	2		Replace if necessary
9	Holder with self-tapping screw	4	Tension the holder by inserting a screwdriver and unclip with a second screwdriver	Clip in
10	Support	2		
11	Plate nut 4.8	2		Adjust to hole center
12	Hexagon screw M 6 x 16	2		
13	Plain washer B 6.4	2		
14	Sill cover	2	Unclip from grommet	
15	Sheet metal screw with washer assembly 4.8 x 16	4		
16	Plastic nut	8		Check, replace if necessary
17	Cap for sill cover	2		

Printed in Germany – V,1989

No.	Description	Qty.	Note when: Removing	Installing
18	Sheet metal screw with washer assembly 4.8 x 19	4		
19	Plastic nut	2		Check, replace if necessary
20	Clip	8	Tension the clips by inserting a screwdriver and unclip with a second screwdriver	Check, replace if necessary
21	Grommet	8		Check, replace if necessary
22	Cover strip	2		Check, replace if necessary
23	Plate nut 4.8	2		Check, replace if necessary
24	Plate nut 4.8	4		Check, replace if necessary

Removing and installing the underbody cladding

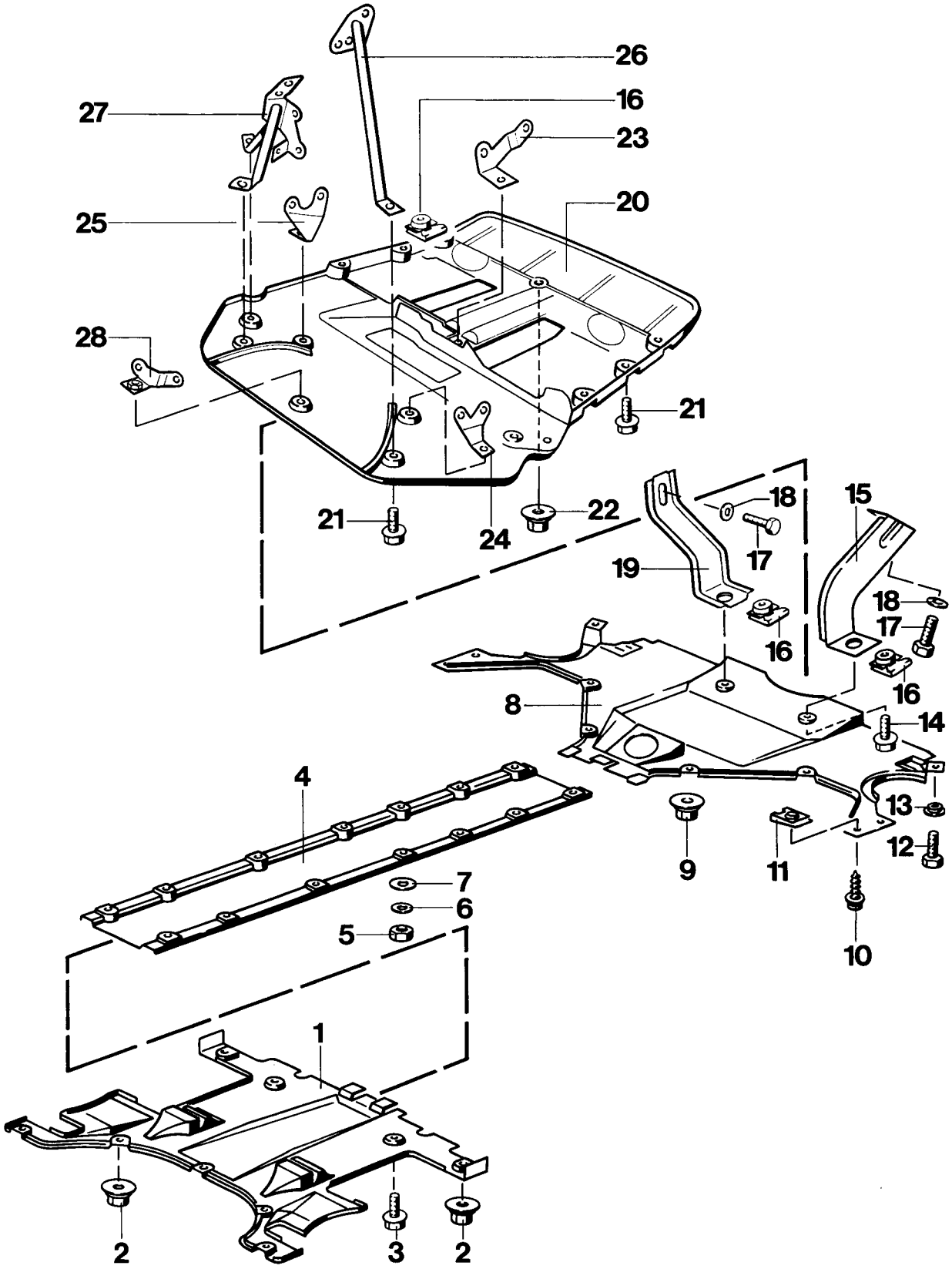

Removing and installing the underbody cladding

No.	Description	Qty.	Note when: Removing	Installing
1	Underbody cladding, front	1		Fit together with underbody cladding, center
2	Plastic nut	7		Check, replace if necessary
3	Screw with washer assembly M 6 x 12	2		
4	Underbody cladding, center	1		Fit together with underbody cladding, transmission
5	Hexagon nut M 6	14		
6	Plain washer B 6.4	14		
7	Washer 9.5 x 22 x2	14		Check, replace if necessary
8	Underbody cladding, transmission	1		Secure at holder, left (15) and holder, right (19)
9	Platic nut	4		Check, replace if necessary
10	Screw with washer assembly 4.8 x 16	4		
11	Plate nut 4.8			Check, replace if necessary
12	Hexagon screw M 6 x 16	2		
13	Spacer disk	2		
14	Screw with washer assembly M 6 x 16	2		
15	Holder, left	1		Secure at gusset plate, rear axle transverse tube

Printed in Germany – V,1989

No.	Description	Qty.	Note when: Removing	Installing
16	Nut holder	2		Check, replace if necessary
17	Hexagon screw M 6 x 16	3		
18	Plain washer A 6.4	3		
19	Holder, right	1		Secure at gusset plate, rear axle transverse tube
20	Underbody cladding, engine	1		Secure at the holders 23 to 27 and with the mounting points on the engine encapsulation
21	Screw with washer assembly M 6 x 20	14		
22	Locking nut M 6 with fixed washer	1	Must not be used again after dismantling	Must be replaced by a new part for installation of the underbody cladding, engine
23	Holder on engine, front	1	Need not be removed for dismantling the underbody cladding, engine	
24	Holder on transmission, bottom left	1	Need not be removed for dismantling the underbody cladding, engine	
25	Holder on transmission, bottom right	1	Need not be removed for dismantling the underbody cladding, engine	
26	Holder on transmission, top left	1	Need not be removed for dismantling the underbody cladding, engine	

Printed in Germany – V,1989

No.	Description	Qty.	Note when: Removing	Installing
27	Holder on transmission, top right	1	Need not be removed for dismantling the underbody cladding, engine	
28	Holder on transmission, bottom center	1	Need not be removed for dismantling the underbody cladding, engine	

Bonding retainer bracket to side member panel

For the “Bonding retainer bracket to side member panel” repair operation, the following parts and adhesives are required:

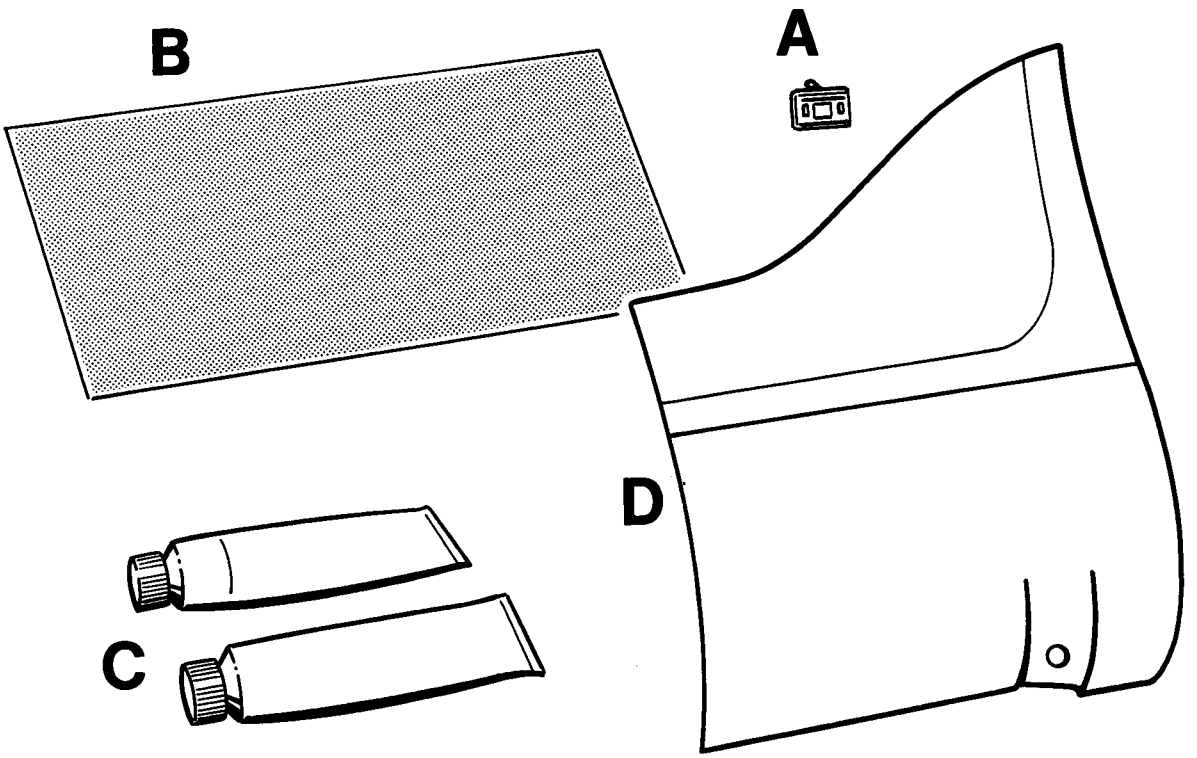

1075 - 66

A = **Retainer bracket**

B = Emery paper

C = **2-pack adhesive** (999.915.359.40)*

D = Side member panel

* = Porsche part no.

Printed in Germany – XV, 1992

Bonding retainer bracket to side member panel

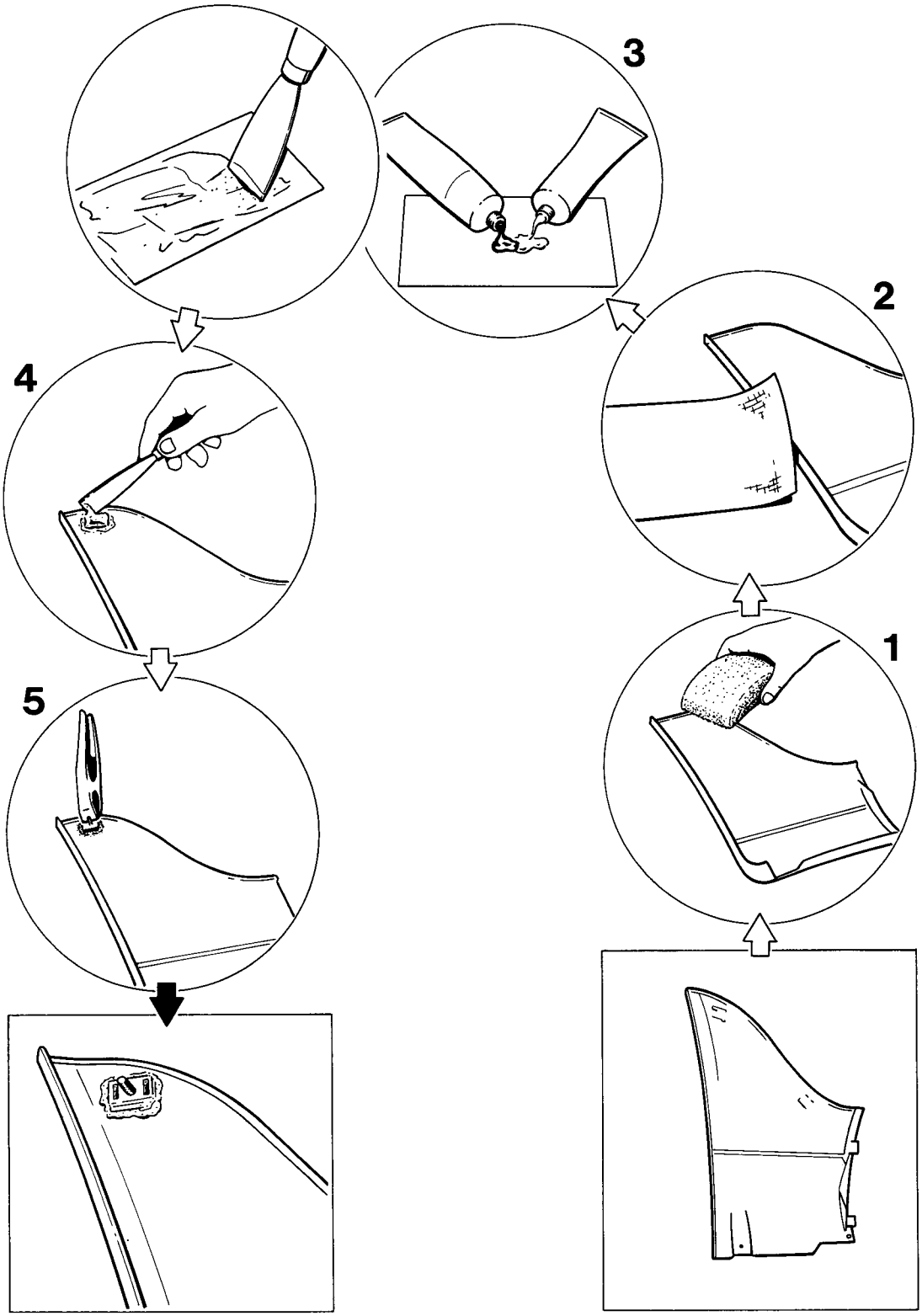

Printed in Germany – XV, 1992

Bonding retainer bracket to side member panel

No.	Operation	Instructions
1	Clean side member panel	Clean side member panel thoroughly with some water.
	Align retainer webs	Align broken-off retainer webs according to the contours. **Note: Do not remove the remains of the broken retainer webs!**
2	Coarsen bonding surfaces	Coarsen bonding surfaces in the area of the broken retainer webs of the side member panel (D) using some emery paper (B) with P 120 grit. Coarsen bonding surface of retainer bracket (A) with emery paper (B), P 120 grit.
	Clean bonding surfaces	Clean prepared bonding surfaces with some water.
3	Mix adhesive	Press equal lengths of beads of adhesive components A and B from tubes (length approx. 2 cm each, giving a **mixing ratio** of **1 : 1**) and mix uniformly. **Caution: Curing time is approx. 8 minutes!**
4	Apply adhesive	Appply a thick layer of mixed adhesive onto the side member panel in the area of the broken retainer webs and on the retainer bracket.
5	Bond retainer brackets in place	Position retainer brackets in correct position with regard to body hole on side member panel and clamp in place for approx. 20 to 30 minutes using suitable clamps.

Note: The side member panel may be refitted to the vehicle after approx. 2 hours!

Printed in Germany – XV, 1992

Safety Precautions for Working on Cars with Airbag

Airbag units are pyrotechnical items of Danger Class T 1. Handling, transportation and storage are subjected to the legislation for explosives.

The mentioned legislative measures refer to the Federal Republic of Germany. Always conform with the pertinent legislation in other countries.

The beginning of work on pyrotechnical items must be reported to the Trade Supervisory Office (official authorities) 14 days in advance.

Shipping

The shipment of airbag units may only take place in the officially approved packaging for transportation. Airbag units may not be transported together with other dangerous items.

Within a company transportation is only permitted in the trunk or cargo room of a vehicle with use of the above mentioned packaging for transportation. Transportation in the passenger compartment is forbidden.

Storage

Storage of airbag units must be in conformance with the second ordinance of the legisation for explosives. According to this ordinance small amounts of substances and items may be stored at certain locations without a special storage permit. For pyrotechnical items of Danger Class T 1 this would be max. 20 kg (gross) in a workroom or max. 200 kg (gross) in a storeroom. Airbag units must be stored locked.

When storing airbag units it is very important to make sure that the padded sides face up (danger of injury from an ejected airbag unit in case of accidental ignition).

Airbag units may not be stored together with other products in danger clssification (paint, etc.).

Printed in Germany – III, 1989

Installation and Repairs

Testing and installing may only be carried out by qualified personnel.

The following precautionary measures are always mandatory prior to working on the airbag system as well as work on neighboring parts, where there is danger that power supplying parts could get too close to the airbag system.
1. Turn off ignition
2. Disconnect and cover battery ground pole.

After disconnecting the battery installation or repairs on the vehicle with use of a hammer or similar tools may first be begun **only after waiting time of 20 minutes***. This is necessary to interrupt power supply of the airbag system and to guarantee that accidental ignition is not poss-ible.

Installation of airbag units must commence immediately after removal from the location of storage. Under no circumstances may they be left unattended. Airbag units must be placed under lock immediately when installing procedures are interrupted.

Airbag units must never have contact with grease, oil, cleaning solutions or similar products.

Airbag units must never be subjected to temperatures above 90° C (195° F), not even briefly.

* As of software level B 01, the waiting time is reduced to 5 minutes.
The software level may be called up with the System Tester.

Airbag units, crash sensors and control units, which have fallen from a height of more than 0.5 meter (1.5 feet), may no longer be installed.

Additional trim, labels or anything similar may not be installed on the steering wheel or in the area of the front passenger's airbag.

No modifications or changes may be made on the wiring and components of the airbag system.

The battery must always be disconnected before beginning with straightening and welding work with use of an electric welder.

If welding is required in the immediate vicinity of crash sensors and control, these parts must be removed first.

Airbag components may never be repaired; they must always be replaced.

Note

Hands must always be washed thoroughly after touching triggered airbag units.

Scrapping Airbag Units

Non-ignited airbag units are potential danger and also an environmental hazard. Don not scrap non-ignited airbag units until they have been ignited electrically to render them harmless (see page 68 - 13).

If the airbag units cannot be ignited, return them to the Porsche company or the relevant importer in their original spare part shipment packing and by the same method of transport.

Printed in Germany – XVIII, 1992

Removing and Installing Airbag Steering Wheel

Removing

1. Disconnect battery and cover pole or battery.

2. Remove driver's airbag unit (see page 68 - 4).

3. Unscrew and remove hexagon nut with the spring washer.

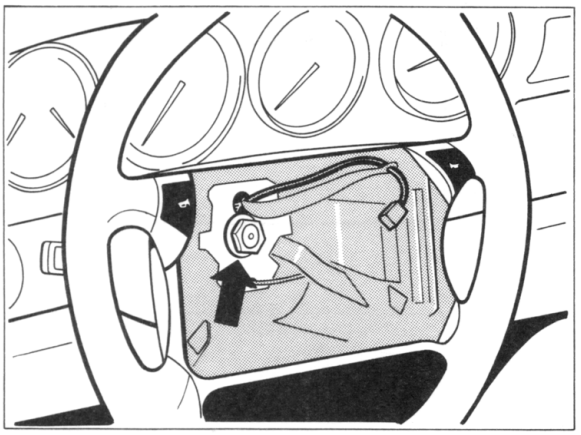

276-68

4. Mark position of steering wheel to steering shaft for reinstallation.

Installing

1. Mount steering wheel in straight ahead position of the road wheels or according to the removal marks in such a manner, that the upper steering wheel spokes are horizontal.

Note

Steering wheel must be mounted in such a manner that electric leads of the contact unit are not pinched.

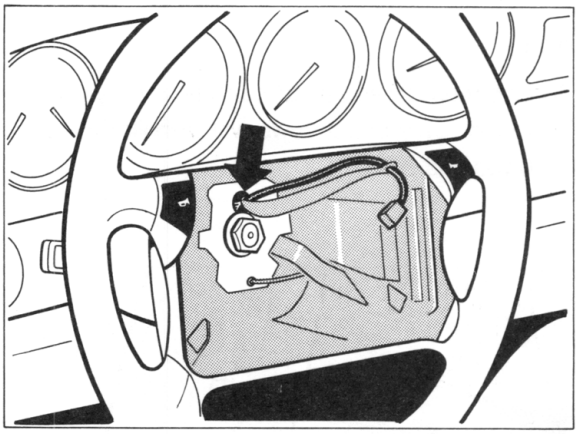

276-68

2. Install hexagon nut with spring washer and tighten with 45 Nm (32.5 ft. lbs.).

3. Install driver's airbag unit.

4. Check function of horn.

Printed in Germany – III, 1989

Removing and Installing Airbag Components

Removing and Installing Driver's Airbag Unit

1. Disconnect battery and cover pole or battery.

2. Unscrew two mounting screws with a Torx T 30 screwdriver socket.

Note

Screws must be replaced each time they are loosened. Only use screws with a collar from 1990 models on.

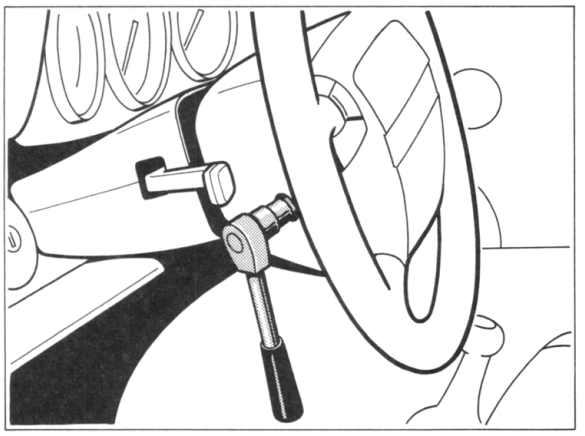

273-68

3. Disconnect plug.

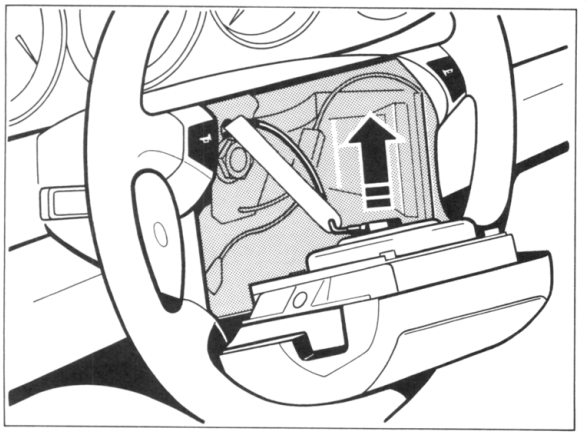

274-68

Note

The airbag unit must always be laid aside in such a manner that the padded side faces up.

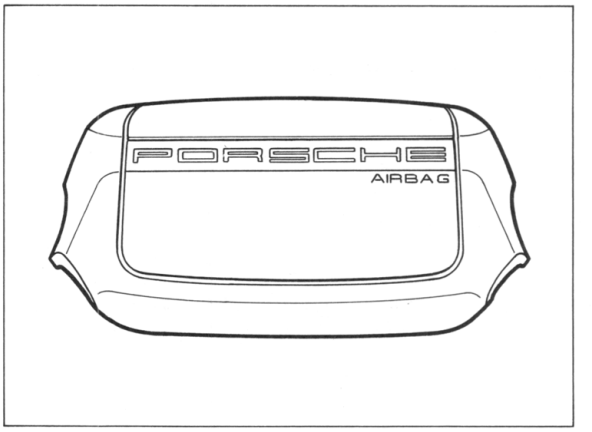

275-68

Airbag units must be placed under lock when removed for a long time. Confrom with the safety precautions.

Tightening torque for mounting screws:
10 Nm (7 ft. lbs.).

Printed in Germany – III, 1989

Removing and Installing Contact Unit

1. Remove airbag steering wheel (see page 68 - 3).

2. Loosen and take off trim panel.

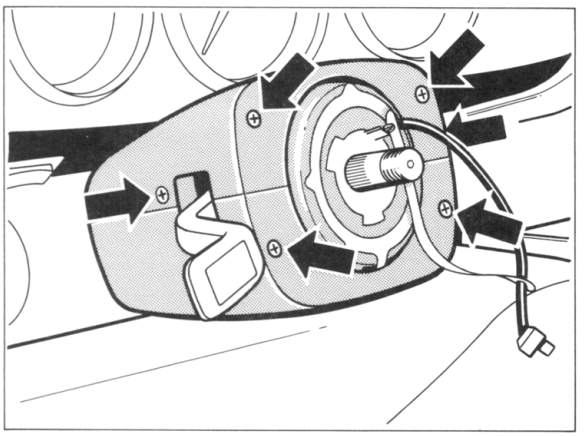

277-68

3. Unscrew mounting screws.

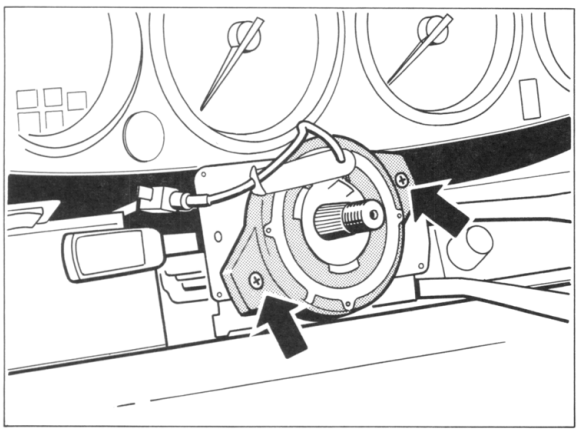

278-68

4. Take off contact unit and pull out connection leads.

5. Disconnect plug.

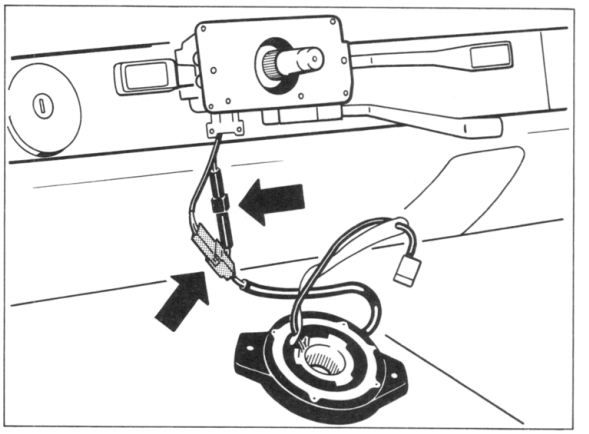

279-68

Note

Turn front wheels to straight ahead position and move the contact unit to center position (about 4 1/2 turns from left or right final stop) prior to installation of the contact unit. The precise center position is indicated by both arrows.

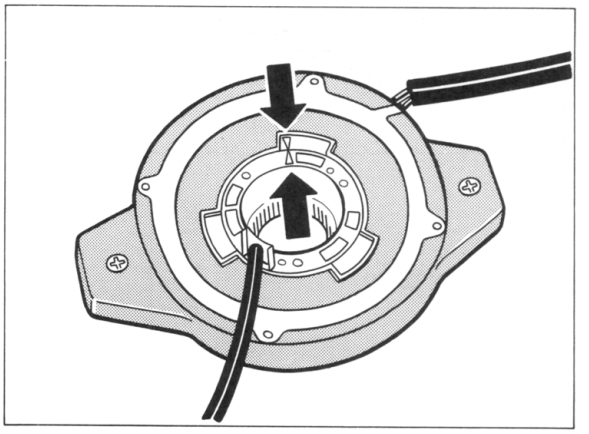

280-68

A new contact unit is arrested in center position. The arrest is removed only after installation of the contact unit.

Printed in Germany – III, 1989

Removing and Installing Crash Sensors

Note

Crash sensors are mounted in the luggage compartment on left and right sides in front of the spring strut domes.

The installed position is given by installation.

Plugs are located at the left on the firewall and at right below the central electric board.

1. Disconnect battery and cover pole or battery.

2. Disconnect plug.

3. Unscrew shear-off nuts with Special Tool 9259.

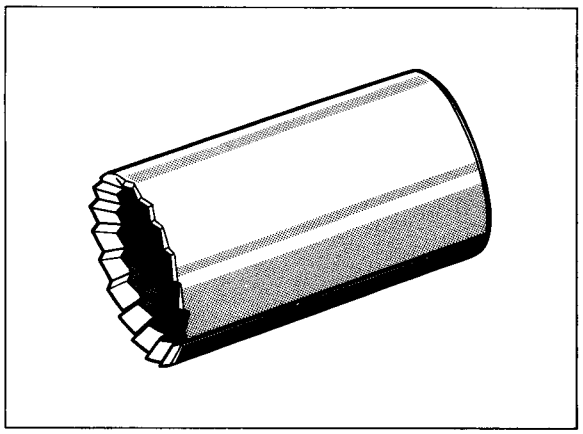

281-68

Special Tool 9259

Note

Use a 1/4 inch socket to tighten the shear-off nuts.

Mounting points on the body must show blank metal.

Printed in Germany – III, 1989

Removing and Installing Passenger's Airbag Unit

1. Disconnect battery and cover pole or battery.

2. Remove glove box.

3. Pull off plugs on unit.

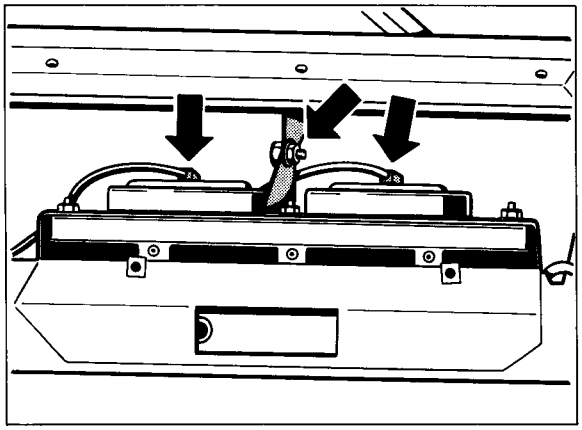

282-68

4. Unscrew M 8 mounting bolt.

5. Remove radio and holding frame.

6. Remove heater/air conditioner controls and holding frame.

Note

There is one each screw for the knee guard underneath the holding frames.

7. Remove ashtray.

8. Remove knee guard.

9. Remove bottom airbag flap (3 screws).

10. Remove top airbag flap (4 screws). Press flap forward after loosening the 4 screws and pull it out downward (flap is attached on a brace).

11. Unscrew mounting screws (5 mm hexagon socket).

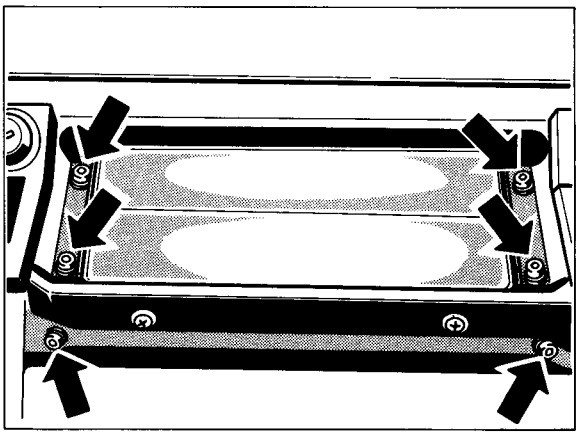

283-68

Note

The hexagon socket head screws are micro-encapsulated. Use new screws for installation. **Tightening torque: 6 Nm (4.3 ft. lbs.).**

12. Remove airbag unit downward.

Always lay the airbag unit aside in such a manner that the airbag faces up.

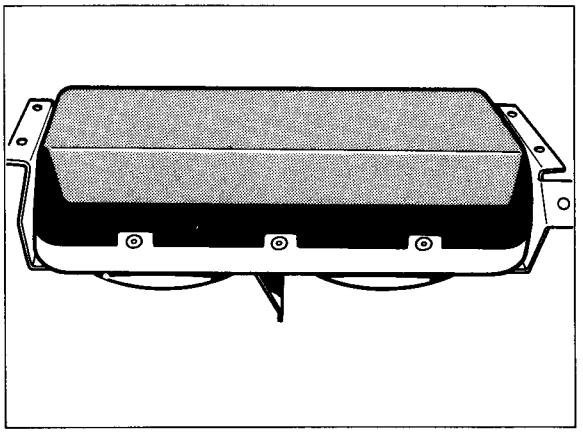

284-68

Printed in Germany – III, 1989

Removing and installing control unit

Note

The control unit is fitted to the transverse wall behind the center console.

1. Disconnect battery and cover terminal and battery, respectively.

2. Remove center console.

3. Remove glove compartment.

4. Remove Central Electrical System.

5. Disconnect connectors for left-hand front sensor, contact unit, right-hand front sensor, passenger airbag unit, 2-pin and 6-pin connectors for main wiring harness.

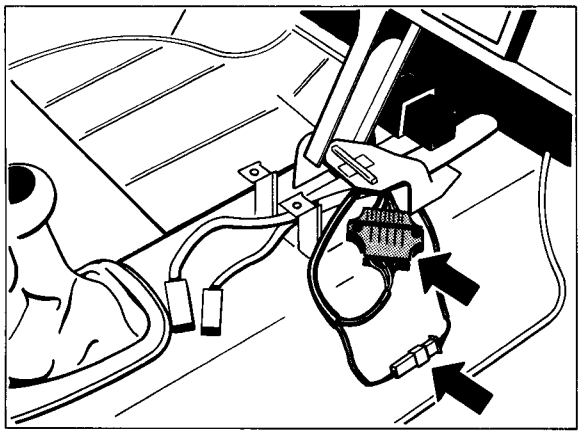

285-68

2-pin and 6-pin connectors below center console.

Note

The 6-pin connector is locked by an orange clamp that is destroyed when the connector is removed. When reinserting the connector, lock the connector with a blue clamp.

6. Route connecting leads to front sensors back into passenger compartment.

7. Disconnect tie-wraps along harness.

8. Remove shear-off nuts with Special Tool 9259.

9. Remove hexagon nuts with socket key insert.

Note

Fit shear-off nuts in a diagonal pattern.

10. Remove control unit complete with water protection cap.

Note

The attachment points at the body must be cleaned down to bare metal.

To tighten the shear-off nuts, use a 1/4 inch socket head wrench.

The shear-off nuts are fitted without washers. The M6 hexagon head nuts are fitted with A 6.4 DIN 125 washers.

Tightening torque - M 6 nut: 10 Nm (7 ftlb)

Printed in Germany – XVI, 1992

Checking Airbag System Operation

1. Functional check of airbag warning lamp.
   Turn on ignition. The airbag warning lamp must light up for approx. 5 seconds*. If the warning lamp remains dim, check bulb and/or supply voltage.

2. Functional check of error memory.
   Turn on ignition and pull off fuse for instrument voltage supply for approx. 30 seconds. The airbag warning lamp must no longer indicate an error.
   Read off error and check if error code 58** (warning lamp: short to U_B or ground, error not present) is displayed.

Note

The central warning lamp and the Fasten Seatbelt symbol (US models only) must light along with the airbag warning lamp if an error is stored in the error memory.

3. Erase error memory.

4. Make sure that no covers, decals or similar items are fitted at the steering wheel and in the passenger airbag area.

5. Check components visually for damage and modifications.

6. After checking the system, confirm the check in the appropriate fields of the warranty and service booklet.

** As of manufacturing date June 11, 1992, the switchon time of the airbag warning lamp is reduced to approx. 2.5 sec.*

*** As of software level B 01:30 (Airbag warning lamp: Signal implausible, not present).*

Printed in Germany – XVIII, 1992

Center Consolse / Information about Axial and Lateral Acceleration Sensors

If applicable, conform with the following points when working near the center console.

Location

The sensors are installed on a sheet metal console on the tunnel underneath the center console. These sensors are required for all wheel drive and antiblock systems.

1 - Lateral acceleration sensor

2 - Axial acceleration sensor

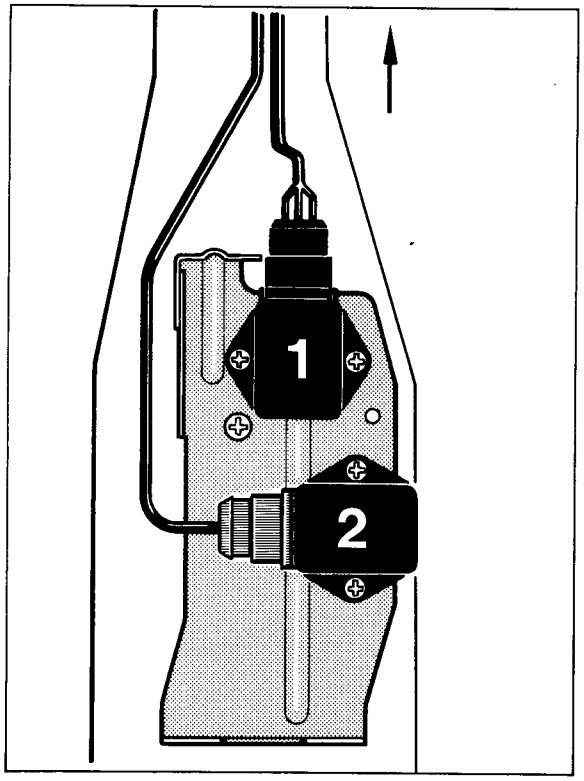

290- 45

Installation

Always conform with the following points when installing:

1. Park car on level ground (level floor).

2. Check levelness of the sheet metal console with a bubble level. Replace a bent sheet metal console.

3. Connecting leads must **not** be mixed up. Plug receptacles have different colors for identification.
   Black plug receptacle for the lateral acceler-ation sensor.
   Gray plug receptacle for the axial acceleration sensor.

4. Sensors must not be subjected to any type of extreme acceleration such as from throwing, falling or knocking.

5. Sensors must always be inspected after an accident. Sensors must be replaced if they are not within specifications.

Checking

Checking is required to guarantee the follow-ing points.

- Correct location (position) of sensors
- Function of sensors
- Electric leads (plugs) connected on the correct sensor (mix-up test)

Testing is described in Rep. Gr. 45 (Volume IV – Chassis).

Printed in Germany – III, 1989

Right-hand front floor sound deadening

Starting with MY '92, a new floor sound deadener for the right-hand front side was introduced. Only the new floor sound deadening is henceforth supplied as a spare part. For this reason, the wiring harness must be rerouted on all vehicles made prior to MY '92.

1. Detach carpeting from sound deadening.

2. Remove sound deadening.

3. Remove tie-wrap.

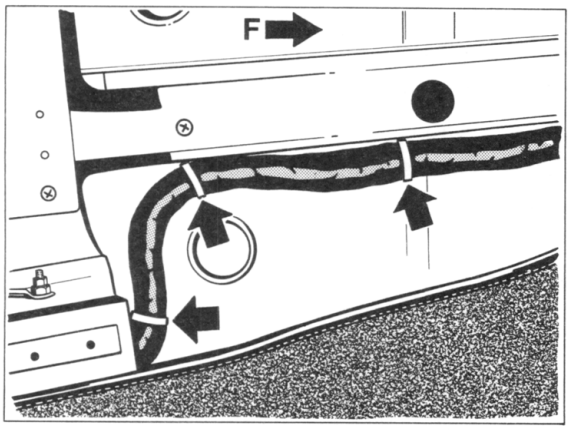

953-68

F = direction of travel

4. Route wiring harness diagonally.

5. Place wiring cover on wiring harness.

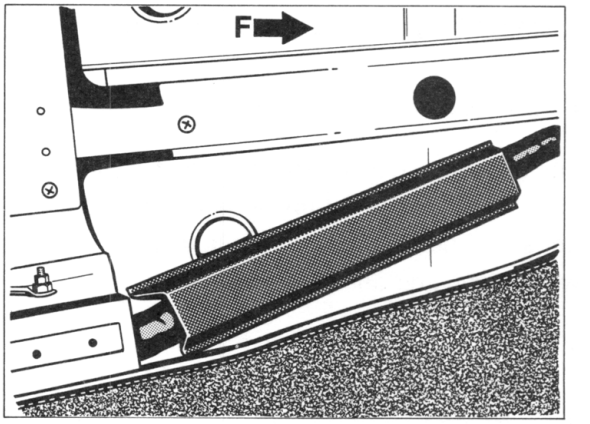

954-68

6. Route excess length of wiring harness below seat.

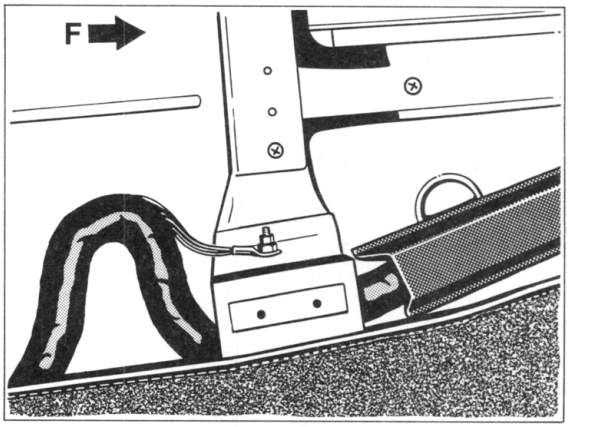

955-68

Printed in Germany – XIV, 1991

Inspecting Seat Belts

Checking Function

It must be possible to have the belt strap roll off of the automatic reel via the reversing fitting without hesitation when pulling the seat belt uniformly and the tongue of the seat belt must be heard engaging in the belt lock. The automatic reel must lock when the seat belt strap is pulled suddenly.

Checking Condition

A visual inspection of the seat belt must not produce any damage or signs of wear on the belt strap. The seat belt must be replaced, if the belt strap is damaged in the form of cuts, fringing, torn seams, rubbing spots or similar conditions.

Additional Checking for Seat Belts with Overload Indicators (Tear Seams) – Airbag Equipment

The tear seam on the belt strap above the holder must not be damaged in addition to the fact that these seat belts must have perfect function and condition. The tear seam serves as an overload indicator, which reports an overloaded condition and therefore the necessity to replace a seat belt.

1 = Anchorage point for holder

2 = Anchorage bolt

3 = Holder

4 = Plastic cap

5 = Indicator (tear seam)

6 = Belt strap

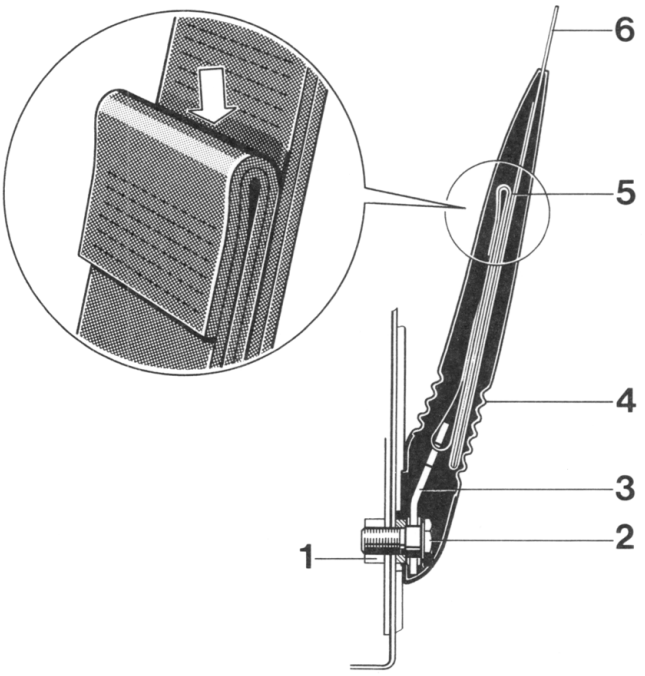

68-261

Correct disposal of airbag units

Airbag units are pyrotechnic objects and can represent an environmental hazard on account of their character as explosion-risk bodies and because of the materials they contain.
For this reason, airbag units which have not yet been ignited, or complete vehicles containing such units must not be treated as "normal" waste or disposed of on any other final refuse dumps.
To avoid possible misues, the airbag units must first be rendered harmless by electrical ignition, making sure that all the relevant precautions are complied with.
In the case of airbag units incapable of igniting or if ignition cannot be carried out in safety, the airbag units must in all cases be returned to Porsche or to the relevant importer in their original spare part packs and by the usual transport channels.

Note

Any specific local or national regulations or legal verdicts which go beyond these instructions must be complied and given preference over these instructions.

Printed in Germany – X, 1990

Safety measures

- Ignition and preparation should only be carried out by properky qualified personnel under the supervision of a second, responsible person.
- All other generally applicable accident prevention regulations must be complied with.
- Only ignite airbag units which are in original condition and properly installed.
- Ignite airbag units only in suitable open spaces.
- Use only the ignition equipment specifically intended for the purpose.
- First remove all loose objects from the airbag expansion area.
- Anyone likely to be affected should be warned about the noise in advance.
- Use the whole length of the ignition device's cable in order to maintain a safe distance from the airbag unit which is to be ignited.
- Do not connect the ignition device to the power source until everything else is ready.
- Position yourself and anyone else involved in front of the vehicle.
- Ignite the airbag unir with the vehicle's doors closed but the tailgate/trunk lid or side windows open.
- If ignition fails to occur, do not approach the vehicle until approx. 3 minutes have elapsed.
- Allow airbag units to cool down after ignition and observe them carefully.
- Avoid skin contact with airbag units which have been ignited.

Printed in Germany – X, 1990

Tools

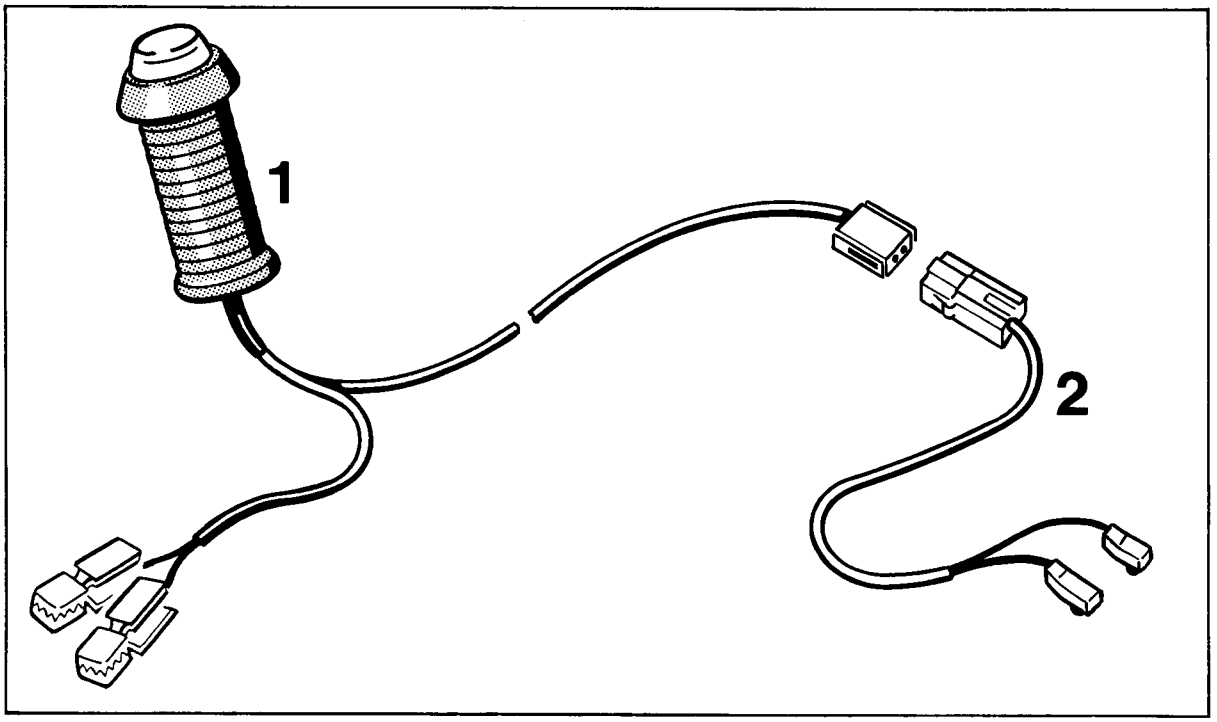

579-68

No.	Designation	Special tool	Order number	Explanation
1	Ignition device	9257*	000.721.925.70	
2	Ignition cable	9257/1*	000.721.925.71	Non-reusable part

* Order as required

Connecting the ignition device

Driver's side

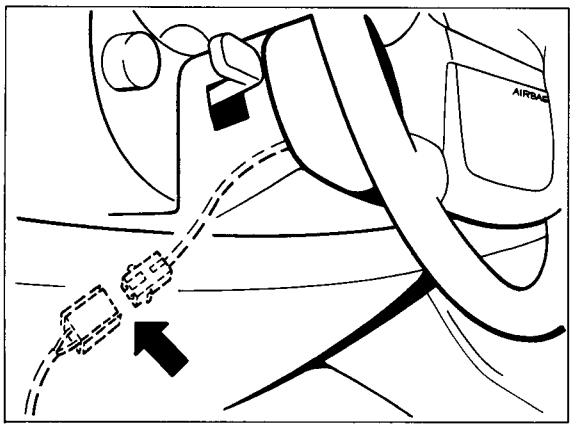

580-68

Direct to 2-pin plug of contact unit
(below steering column).

Passenger's side

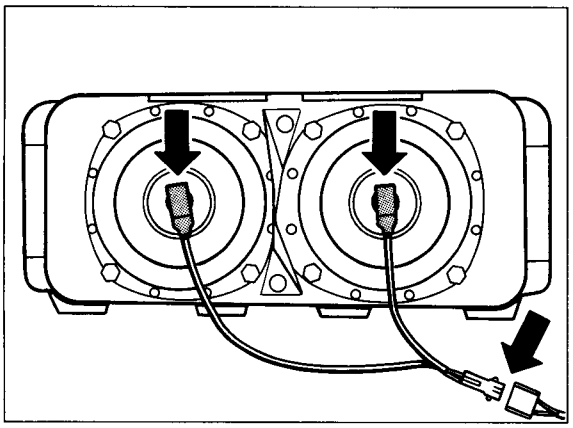

581-68

With ignition cable to both gas generators.

Run the ignition device out through the door gap to a point in front of the vehicle.

Ignition

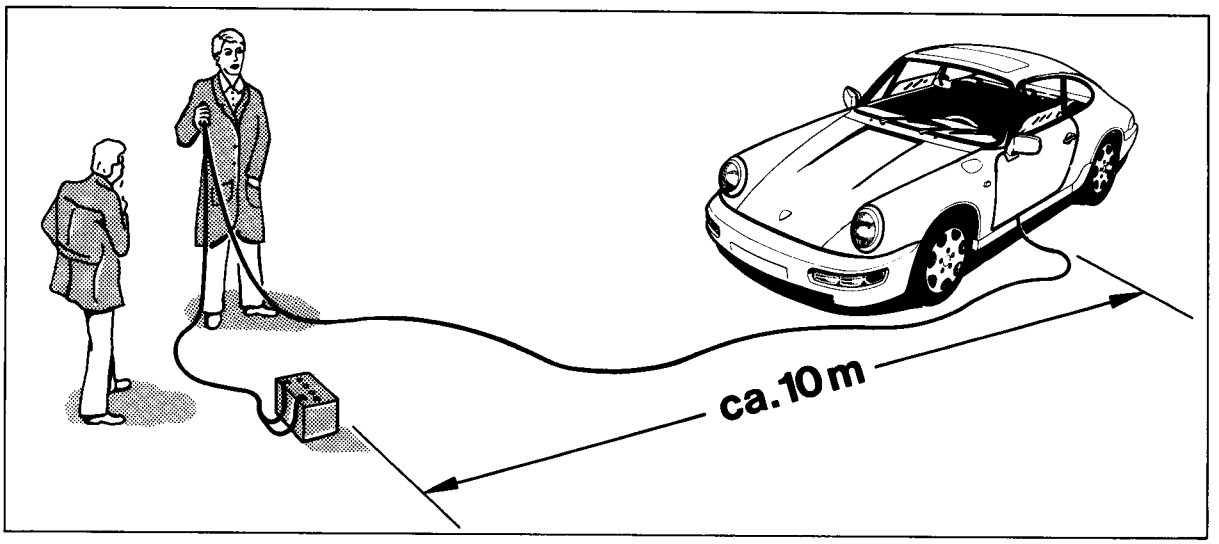

582b-68

Connect the ignition device to a car battery and operate the switch.

Note

The driver's side and passenger's side airbag units must be ignited separately.

After igniting the passenger's side airbag unit, check that both gas generators have ignited (can be identified by both ignition cable plugs having melted).

Repairing horn buttons on airbag steering wheel

Removal

1. Remove airbag steering wheel (refer to page 68-3).

2. Lever out horn button with a small screwdriver.

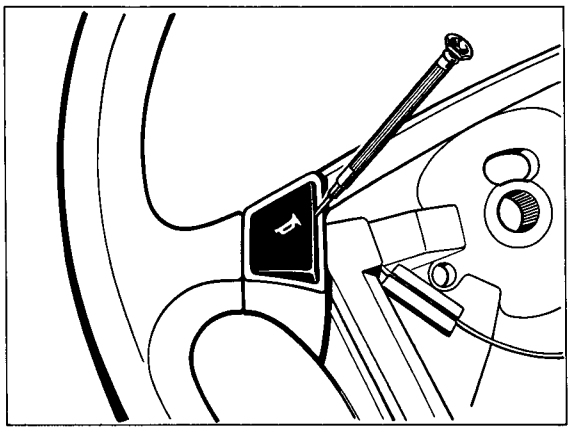

718-68

3. Take out contact spring.

Installation

Note

The silver contact in the middle of the contact spring must point downwards.

4. Insert contact spring into the guides.

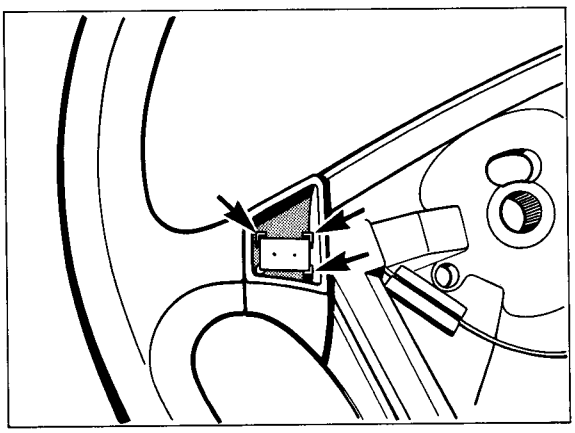

719-68

5. Engage horn button starting with the upper retaining lug, then press all the way in.

Note

Make sure all retaining lugs engage properly. When actuated, the horn button must spring back into its initial position lightly.

Printed in Germany – XI, 1991

Checking operation of the horn buttons.

6. Connect ohmmeter to the connector and to the steering wheel housing.

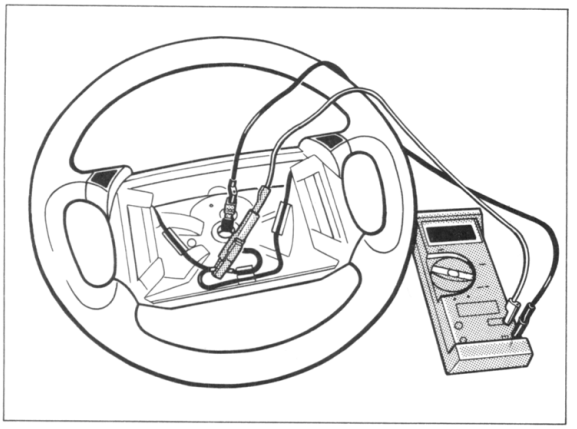

720-68

Display: ∞ Ω

Press horn buttons one after another.

Display: 0 - 5 Ω

Printed in Germany – XI, 1991

Replacing front cover rail and front compartment carpet

For the "Replacing front cover rail and front compartment carpet" repair operation, the following body spares are required:

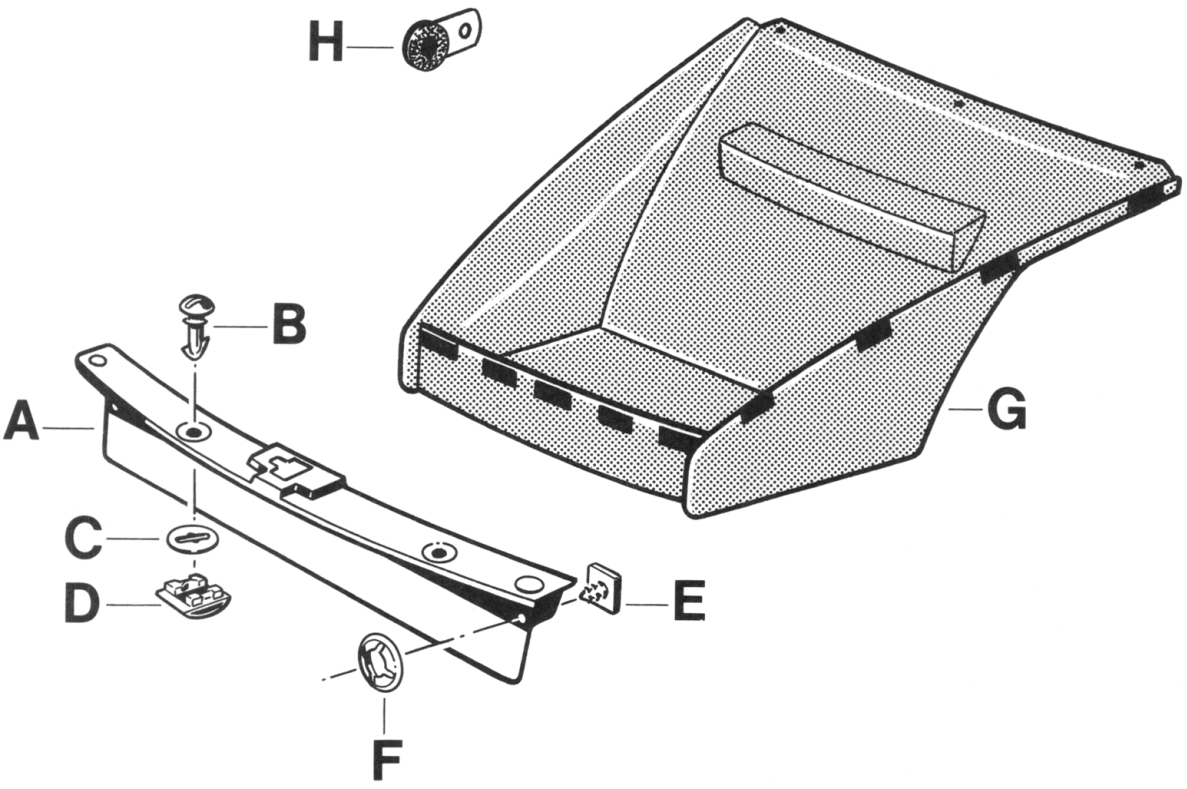

1123 - 68

A = Cover rail

B = Mounting stud

C = Lock washer

D = Locking cam

E = Velcro fastener

F = Clamping washer

G = Front compartment carpet

H = Backing pad

Printed in Germany – XV, 1992

Replacing front cover rail and front compartment carpet

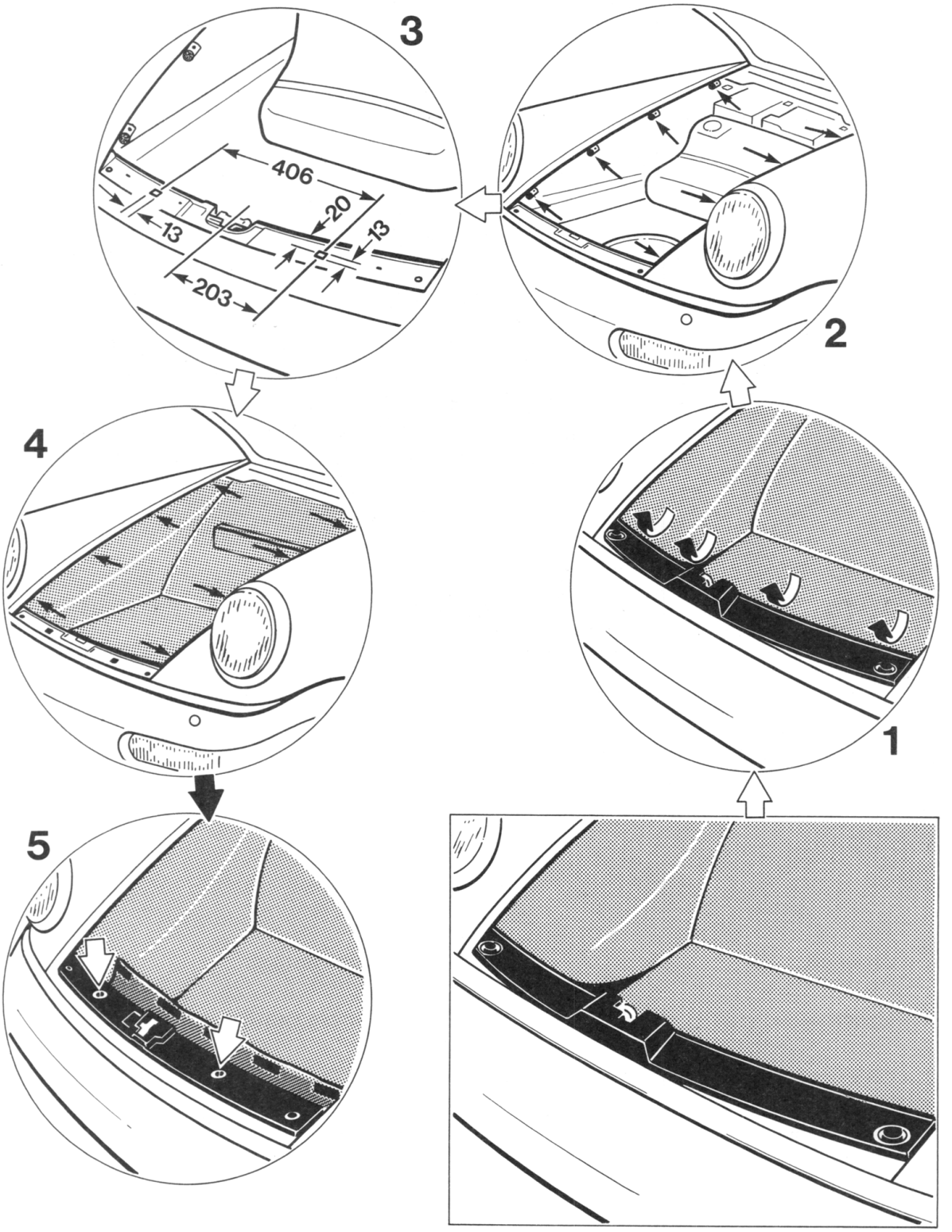

Printed in Germany – XV, 1992

Replacing front cover rail and front compartment carpet

No.	Operation	Instructions
1	Remove front cover	Unclip front compartment carpet from front cover rail. Unscrew mounting nuts of power pump cover. Remove clamping washers of front cover rail and lift front cover rail away from vehicle.
2	Remove front compartment carpet and backing pads	Unclip front compartment carpet along wheel wells and transverse wall. Unscrew backing pads along wheel wells complete with Tenax bottoms.
3	Drill and file out square holes	Draw up square holes according to dimensional sketch, drill and file to specifications using a square file.
4	Fit backing pads and front compartment carpet	Fit backing pads along wheel wells. Fasten front compartment carpet with Velcro fastener along wheel wells and clip into place at transverse wall.
5	Fit locking cam and cover rail	Clip locking cam into square holes of closing panel. Assemble cover rail with mounting studs, lock washers, Velcro fasteners and clamping washers. Place cover rail onto closing panel and latch with mounting studs. Fit front compartment carpet to Velcro fasteners of cover rail.

Printed in Germany – XV, 1992

Dismantling amd assembling the glove compartment lid

Removing and installing the support plate

The following spare part is required when the support plate is to be repaired

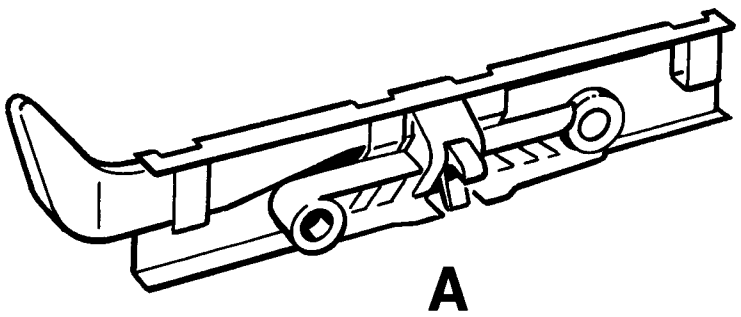

2041-68

A = Support plate

Printed in Germany - XXII, 1994

Dismantling and assembling the glove compartment lid

Removing and installing the support plate

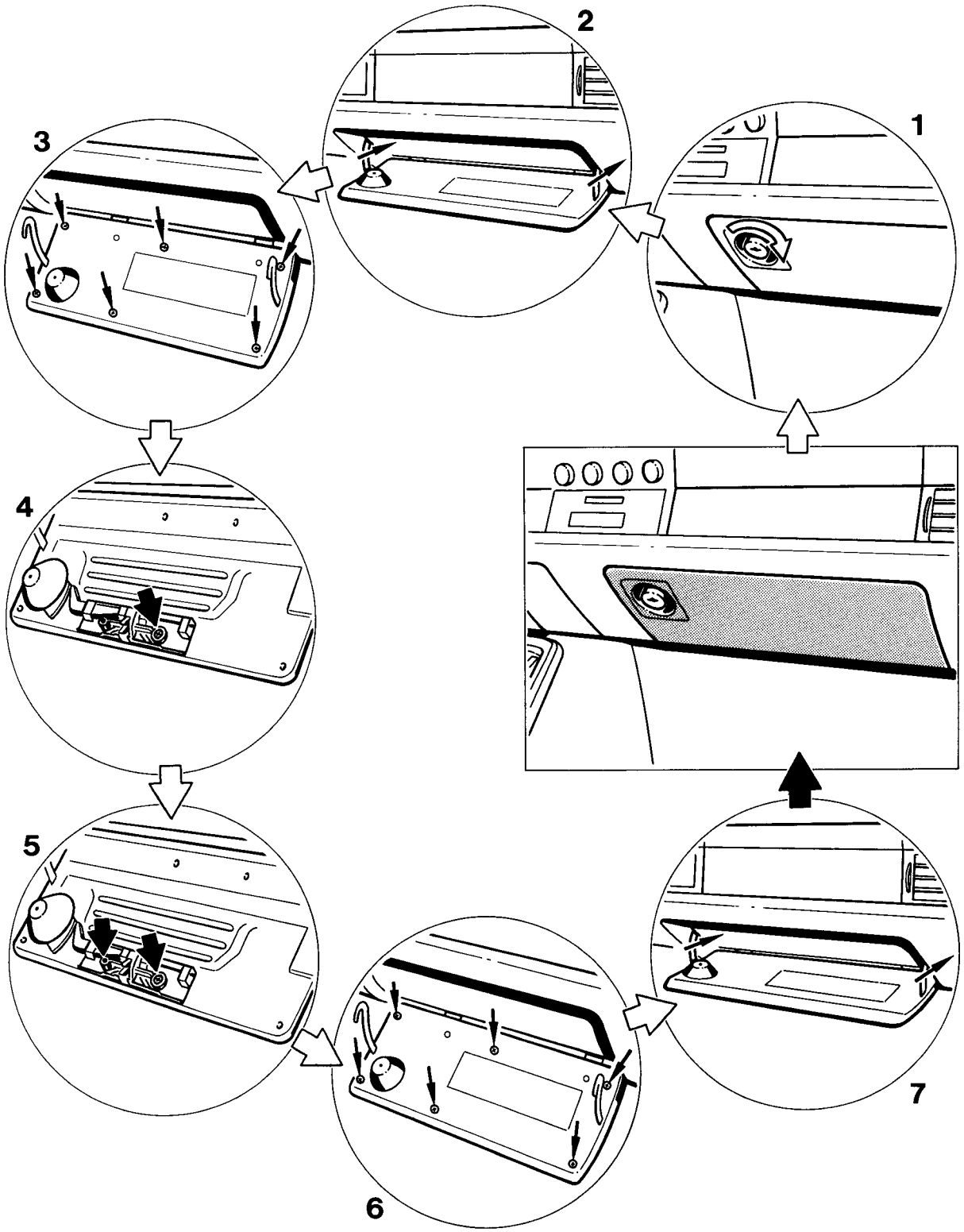

Printed in Germany - XXII, 1994

Dismantling and assembling the glove compartment lid

Removing and installing the support plate

No.	Operation	Instructions
1	Open glove compartment lid	Turn glove compartment lock to the right and open glove compartment lid.
2	Release catch	Apply light pressure to push both catches forward and release glove compartment lid from brackets from below.
3	Remove trim cover	Release crosshead screws of trim cover in glove compartment lid. Take off trim cover, lifting it off over the catches of the glove compartment lid.
4	Remove support plate	Screw out fastening screw of support plate. Take support plate off the glove compartment lid.
5	Fit support plate	Place support plate into glove compartment lid and assemble with crosshead screw. Adjust hole to threads to fit the trim cover.
6	Fit trim cover	Push trim cover of the catches and install glove compartment lid with crosshead screws.
7	Install catches	Apply light pressure to push both catches forward and engage into brackets. Close glove compartment lid.

Printed in Germany - XXII, 1994

Diagnosis / Troubleshooting

The airbag system is continuously monitored by a diagnosis unit in the control unit. If a fault occurs, it is indicated by a warning lamp in the instrument cluster.

In the event of a fault, the central warning lamp and this warning lamp come on. In cars for the USA, the fasten seat belts symbol also lights up.

The airbag warning lamp comes on for approx. 5 seconds when the ignition is switched on, and then goes out. When the engine is started, the warning lamp again comes on for approx. 5 seconds.

Should the warning lamp come on again later, this indicates a fault in the airbag system. The fault can be read out with System Tester 9288 and flashing code tester 9268.

Note:

The control unit needs approx. 70 seconds to identify all faults in the system, and the ignition must therefore be switched on for at least this time.

After a fault in the airbag system has been identified and rectified, **the fault memory must be erased.**

If any components are exchanged, this must be noted in the warranty and maintenance booklet. The document number should be attached in the free space provided. The document number is shown on an adhesive label which can be torn off the spare part.

Following an accident in which the airbag system was activated, the following components must be removed and renewed:

- control unit
- both front sensors
- contact unit
- both airbag units

If non-activated airbag units have to be removed, they must be ignited electrically before being disposed of (see Page 68 - 13).

Printed in Germany – X, 1990

Reading out the fault memory

System Tester 9288: see Repair Manual Group 03, Self-diagnosis
Tester 9268: see Technical Service Information, Model '90.

Meaning of fault codes

1st figure: 3 = Airbag system

2nd figure: 1 = Fault still present

2 = Fault no longer present

3 = Failure time since first fault occurrence

3rd figure:

= Fault code

4th figure:

Before troubleshooting can be carried out correctly, the person concerned must

- be familiar with the component positions and the function and technical relationship of the systems to be checked (model information)
- be able to read and evaluate Porsche circuit diagrams
- understand the function of the electrical circuits and relays
- be capable of operating and assessing the information supplied by the test gear.

Important:

If the tester display or the fault list indicates that a component is defective, the fault may not necessarily be found in the component indicated but may be in the associated control unit or the connecting circuits (electrical paths) between the component and the control unit. Before the fault memory has been read out, no troubleshooting involving the pulling off of plugs or similar is to be carried out, as this could also be stored as a fault in the memory.

Printed in Germany – X, 1990

Note

The fault code can show two types of fault:

– Fault still present

– Fault no longer present

Faults are stored as no longer present if they occur briefly while the ignition is switched on, but are no longer present when the ignition is switched off.

Faults still present are those which are permanent or remain present when the ignition is switched off.

Do not assume that the fault in the readout is actually present or clearly identifiable during the check.

The cause of a fault being memorized may for example be undesirable interference with the airbag system wiring while the ignition was switched on.

It is therefore important in the case of faults no longer present to determine the cause of the fault in order to prevent it from recurring and to avoid renewing parts unnecessarily. Check the entire length of the airbag system wiring for damage (wires no longer intact or trapped).

Printed in Germany – X, 1990

Tools

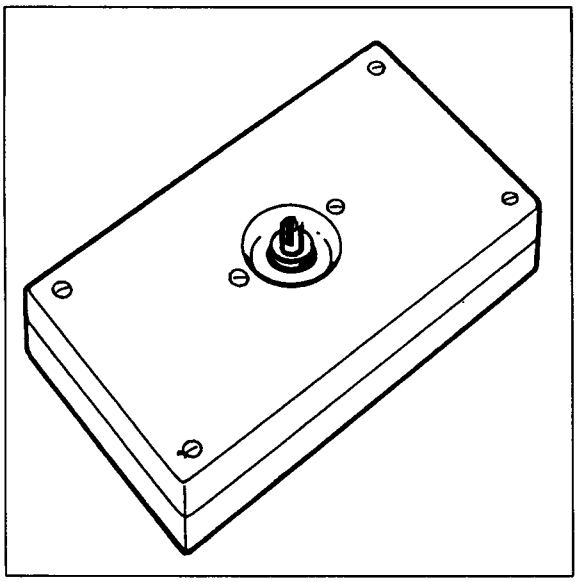

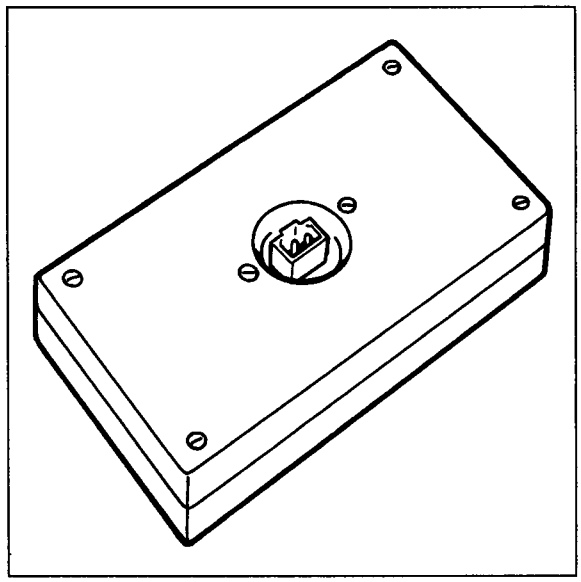

Special tools 9516 and 9516/1 are used to check the ignition pill circuits.

If there is a fault in the ignition pill circuits, attach special tool 9516 in place of the airbag units, then erase the fault memory. Switch the ignition off and on again.

The fault can then be localized by means of the diagnosis unit in the control unit.

If the warning light no longer indicates a fault, the airbag unit is defective and must be renewed.

If the warning light again indicates a fault, this is to be sought in the control unit or the wiring.

A fault in ignition pill circuit 1 may also be caused by the contact unit. Disconnect the wiring from the contact unit and attach special tool 9516/1 in place of the contact unit. Erase the fault memory. Switch the ignition off and then on again. If the warning light no longer indicates a fault, the contact unit is defective; if the warning light again indicates a fault, this must be in the control unit or the wiring.

Note

For safety reasons, never drive the vehicle with the special tools installed in place of the airbag units

Fault Code Table

Fault Code	Fault Description
11	Crash sensor left: closed 1 time
12	Crash sensor left: closed several times
13	Crash sensor right: closed 1 time
14	Crash sensor right: closed several times
15	Crash sensor left: closed continuously*
16	Crash sensor right: closed continuously*
17	Crash sensor left: contact resistance against battery voltage
18	Crash sensor right: contact resistance against battery voltage
19	Crash sensor left: contact resistance against ground
20	Crash sensor right: contact resistance against ground
21	Crash sensor left: short against battery voltage
22	Crash sensor right: short against battery voltage
25	Crash sensor left: ground resistance excessive
26	Crash sensor right: ground resistance excessive
27	Crash sensor left: break in power supply lead**
28	Crash sensor right: break in power supply lead**
29	Crash sensor left: line resistance excessive
30	Crash sensor right: line resistance excessive
33	Ignition capacitor 1: capacity insufficient
34	Ignition capacitor 2: capacity insufficient
35	Ignition capacitor 1: contact resistance excessive
36	Ignition capacitor 2: contact resistance excessive
37	Ignition pill circuit 1: contact resistance against battery voltage
38	Ignition pill circuit 2: contact resistance against battery voltage

* Fault Codes 15 and 16 also appear as fault Code 60 respectively 105. Replace crash sensor and cancel the fault memory. Repeat diagnosis. Replace control unit, if fault Code 60 respectively 105 appears again.

** Fault code 27 or 28: fault code 25 or 26 will also appear.

Printed in Germany – XI, 1991

Fault Code	Fault Description
39	Ignition pill circuit 3: contact resistance against battery voltage
40	Ignition pill circuit 1: short against battery voltage
41	Ignition pill circuit 2: short against battery voltage
42	Ignition pill circuit 3: short against battery voltage
43	Ignition pill circuit 1: contact resistance against ground
44	Ignition pill circuit 2: contact resistance against ground
45	Ignition pill circuit 3: contact resistance against ground
46	Ignition pill circuit 1: short against ground
47	Ignition pill circuit 2: short against ground
48	Ignition pill circuit 3: short against ground
49	Ignition pill circuit 1: break
50	Ignition pill circuit 2: break
51	Ignition pill circuit 3: break
52	Ignition pill circuit 1: resistance insufficient
53	Ignition pill circuit 2: resistance insufficient
54	Ignition pill circuit 3: resistance insufficient
55	Ignition pill circuit 1: resistance excessive
56	Ignition pill circuit 2: resistance excessive
57	Ignition pill circuit 3: resistance excessive
58	Warning lamp: short against battery voltage or ground
59	Warning lamp: break
60	Diagnosis unit: faulty
61	Firing order correct (after crash)
62	Ignition current correct (after crash)
65	Ignition pill current flows (after crash)
67 to 105	internal fault*

Ignition pill circuit 1: driver's airbag
Ignition pill circuits 2 and 3: passenger's airbag

* When the airbag system is checked with the 9268 Tester, fault code 60 always appears in the event of an internal fault.

Printed in Germany – XI, 1991

Fault, Fault Code	Possible Causes, Elimination, Remarks

Note

After any airbag system fault has been detected and rectified, the fault memory **must** be erased.

Test point 1

Left front sensor closed once
Fault code 3 _ 11

– Renew front sensor.

Test point 2

Left front sensor closed several times
Fault code 3 _ 12

– Renew front sensor.

Test point 3

Right front sensor closed once
Fault code 3 _ 13

– Renew front sensor.

Test point 4

Right front sensor closed several times
Fault code 3 _ 14

– Renew front sensor.

Test point 5

Left front sensor closed permanently
Fault code 3 _ 15

– Renew front sensor.

Test point 6

Right front sensor closed permanently
Fault code 3 _ 16

– Renew front sensor.

Printed in Germany – X,1990

Fault, Fault Code	Possible Causes, Elimination, Remarks
Test point 7 Left front sensor Contact resistance to U_B Fault code 3 _ 17	– Check front sensor at plug connection with ohmmeter. 1. Ohmmeter at terminal 1 and terminal 2 Display: 10 kΩ 2. Ohmmeter at terminal 2 and terminal 3 Display: 0...0.5 Ω If measured values are within tolerance, renew the control unit; if out of tolerance, renew the front sensor.
Test point 8 Right front sensor Contact resistance to U_B Fault code 3 _ 18	– See test point 7
Test point 9 Left front sensor Contact resistance against earth/ground Fault code 3 _ 19	– See test point 7
Test point 10 Right front sensor Contact resistance against earth/ground Fault code 3 _ 20	– See test point 7
Test point 11 Left front sensor Short-circuit to U_B Fault code 3 _ 21	– See test point 7

Fault, Fault Code	Possible Causes, Elimination, Remarks
Test point 12 Right front sensor Short-circuit to U_B Fault code 3 _ 22	– See test point 7
Test point 13 Left front sensor Earth/ground resistance too high Fault code 3 _ 25	– Check front sensor: plug contacts and plug connection must engage correctly. – Check front sensor with ohmmeter; see test point 7 – Check mounting points; the metal must be bright for good electrical contact.
Test point 14 Right front sensor Earth/ground resistance too high Fault code 3 _ 26	– see test point 13
Test point 15 Left front sensor Break in feed line Fault code 3 _ 27	– Check front sensor plug connection: plug contacts and plug connection must engage correctly. – Check front sensor mit ohmmeter (see test point 7). If no fault is detected at front sensor, renew the control unit.
Test point 16 Right front sensor Break in feed line Fault code 3 _ 28	– see test point 15
Test point 17 Left front sensor Line resistance too high Fault code 3 _ 29	– Check front sensor mit ohmmeter (see test point 7). If no fault is detected at the front sensor, renew the control unit.

Printed in Germany – X,1990

Fault, Fault Code	Possible Causes, Elimination, Remarks
Test point 18 Right front sensor Line resistance too high Fault code 3 _ 30	– See test point 17
Test point 19 Ignition condenser 1 Capacitance too low Fault code 3 _ 33	– Renew the control unit.
Test point 20 Ignition condenser 2 Capacitance too low Fault code 3 _ 34	– Renew the control unit.
Test point 21 Ignition condenser 1 Contact resistance too high Fault code 3 _ 35	– Renew the control unit.
Test point 22 Ignition condenser 2 Contact resistance too high Fault code 3 _ 36	– Renew the control unit.

Printed in Germany – X,1990

Fault, Fault Code	Possible Causes, Elimination, Remarks

Test point 23

Ignition pill circuit 1
Contact resistance
to U_B
Fault code 3 _ 37

1. Remove driver's airbag unit.
2. Attach special tool 9516 in place of the airbag unit.

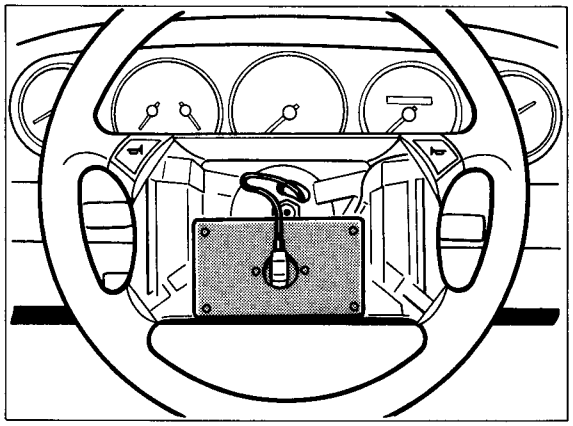

3. Erase the fault memory.

4. Check whether fault is still present.

a) If fault is no longer present, renew the airbag unit.

b) If fault is still present, separate connections at contact unit and attach special tool 9516/1.

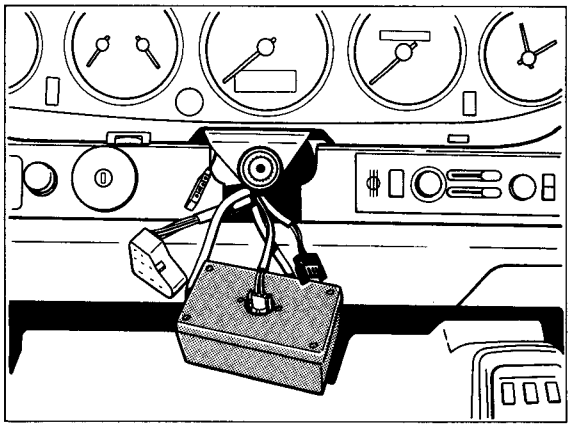

5. Erase the fault memory.

6. Check whether fault is still present.

a) If the fault is no longer present, renew the contact unit.

b) If the fault is still present, renew the control unit.

Printed in Germany – X,1990

Fault, Fault Code	Possible Causes, Elimination, Remarks
	Note Ignition pill circuit 2 is the left of the two passenger-side airbag circuits, ignition pill circuit 3 the right circuit.
Test point 24 Ignition pill circuit 2 Contact resistance to U_B Fault code 3 _ 38	1. Pull off plug at passenger-side airbag unit. 2. Attach special tool 9516. 3. Erase the fault memory. 4. Check whether fault is still present. a) If fault is no longer present, renew passenger-side airbag. b) If fault is still present, renew the control unit.
Test point 25 Ignition pill circuit 3 Contact resistance to U_B Fault code 3 _ 39	– see test point 24
Test point 26 Ignition pill circuit 1 Short-circuit to U_B Fault code 3 _ 40	– see test point 23
Test point 27 Ignition pill circuit 2 Short-circuit to U_B Fault code 3 _ 41	– see test point 24
Test point 28 Ignition pill circuit 3 Short-circuit to U_B Fault code 3 _ 42	– see test point 24

Printed in Germany – X,1990

Fault, Fault Code	Possible Causes, Elimination, Remarks
Test point 29 Ignition pill circuit 1 Contact resistance to earth/ground Fault code 3 _ 43	– see test point 23
Test point 30 Ignition pill circuit 2 Contact resistance to earth/ground Fault code 3 _ 44	– see test point 24
Test point 31 Ignition pill circuit 3 Contact resistance to earth/ground Fault code 3 _ 45	– see test point 24
Test point 32 Ignition pill circuit 1 Short-circuit to earth/ground Fault code 3 _ 46	– see test point 23
Test point 33 Ignition pill circuit 2 Short-circuit to earth/ground Fault code 3 _ 47	– see test point 24
Test point 34 Ignition pill circuit 3 Short-circuit to earth/ground Fault code 3 _ 48	– see test point 24

Fault, Fault Code	Possible Causes, Elimination, Remarks

Test point 35

Ignition pill circuit 1
Break
Fault code 3 _ 49

– Check that plug connection to airbag unit is correctly engaged.

– Check that plug connection to contact unit is correctly engaged.

If no fault is detected:

1. Remove driver's airbag unit.

2. Attach special tool 9516 in place of the airbag unit.

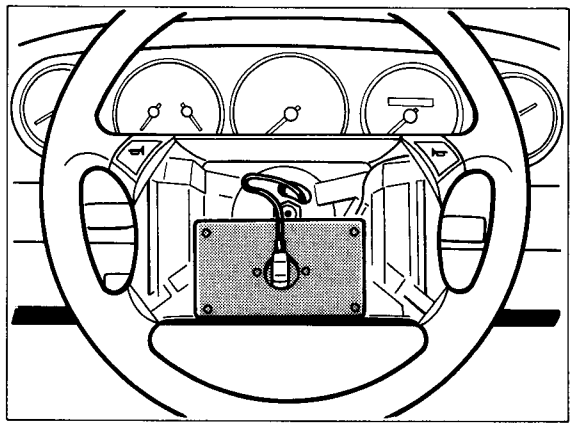

3. Erase the fault memory.

4. Check whether the fault is still present.

a) If the fault is no longer present, renew the airbag unit.

b) If the fault is still present, separate the plug connection to the contact unit and attach special tool 9516/1.

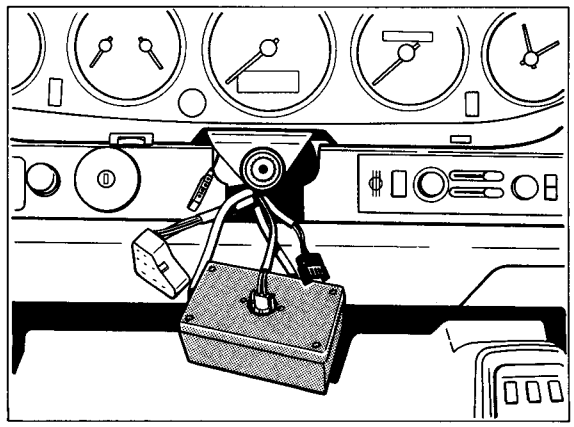

5. Erase the fault memory.

Fault, Fault Code	Possible Causes, Elimination, Remarks
	6. Check whether fault is still present. a) If the fault is no longer present, renew the steering contact unit. b) If the fault is still present,renew the control unit.
Test point 36 Ignition pill circuit 2 Break Fault code 3 _ 50	– Check that the plug connection to the airbag unit is correctly engaged. If no fault is detected: 1. Pull off plug at passenger-side airbag unit. 2. Attach special tool 9516. 3. Erase the fault memory. 4. Check whether fault is still present. a) If the fault is no longer present, renew the passenger-side airbag unit. b) If the fault is still present, renew the control unit.
Test point 37 Ignition pill circuit 3 Break Fault code 3 _ 51	– see test point 36
Test point 38 Ignition pill circuit 1 Resistance too low Fault code 3 _ 52	– see test point 23
Test point 39 Ignition pill circuit 2 Resistance too low Fault code 3 _ 53	– see test point 24

Printed in Germany – XV,1992

Fault, Fault Code	Possible Causes, Elimination, Remarks
Test point 40 Ignition pill circuit 3 Resistance too low Fault code 3 _ 54	– see test point 24
Test point 41 Ignition pill circuit 1 Resistance too high Fault code 3 _ 55	– see test point 23
Test point 42 Ignition pill circuit 2 Resistance too high Fault code 3 _ 56	– see test point 24
Test point 43 Ignition pill circuit 3 Resistance too high Fault code 3 _ 57	– see test point 24
Test point 44 Warning lamp: short-circuit to U_B or earth/ground Fault code 3 _ 58	– Check wiring for damage. – Check instrument cluster.
Test point 45 Break in circuit at warning lamp Fault code 3 _ 59	– Check power supply fuse for instrument cluster – Check warning lamp and renew if necessary. – Check wiring for damage.

Printed in Germany – XV,1992

Fault, Fault Code	Possible Causes, Elimination, Remarks

Test point 46

Defective diagnosis unit
Fault code 3 _ 60

– Renew the control unit

Test point 47

Ignition sequence correct (after crash)
Fault code 3_61

– All airbag components must be renewed after the airbag has been activated.

Test point 48

Ignition current correct (after crash)
Fault code 3 _ 62

– see test point 47

Test point 49

Ignition pill current has flowed (after crash)
Fault code 3 _ 65

– see test point 47

Test point 50

Control unit defective
Fault code 3 _ 67

– Renew the control unit

Note on test point 50

With the 9288 System Tester, a fault code can be displayed in the range from 67 to 105.
On the 9268 Tester, code 60 is always displayed if the fault is in the range from 67 to 105.

Printed in Germany – X,1990

Diagnosis / troubleshooting

As of software level B 01

As of software level B 01, the waiting time for assembly operations is changed from 20 minutes to 5 minutes (refer to page 68 - 2).

As of manufacturing date June 11, 1992, the switchon time of the airbag warning lamp is reduced from approx. 5 seconds to approx. 2.5 seconds.

If it is not possible to run a diagnosis with the System Tester, correct fault according to Group 03 of repair documents.

Printed in Germany – XVIII, 1992

Tools

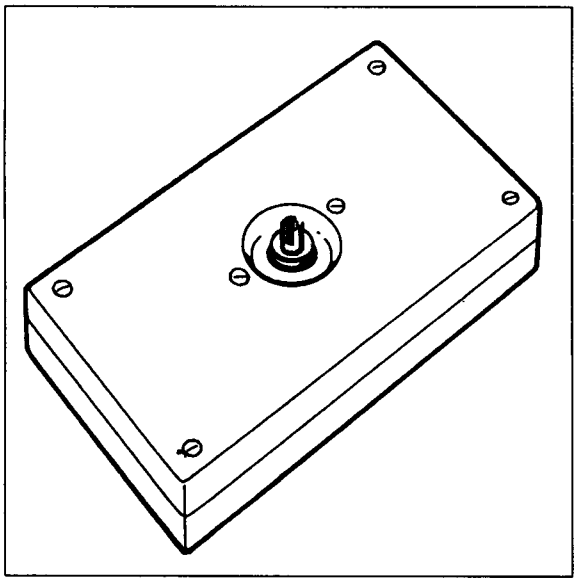

560-68

Special tool 9516

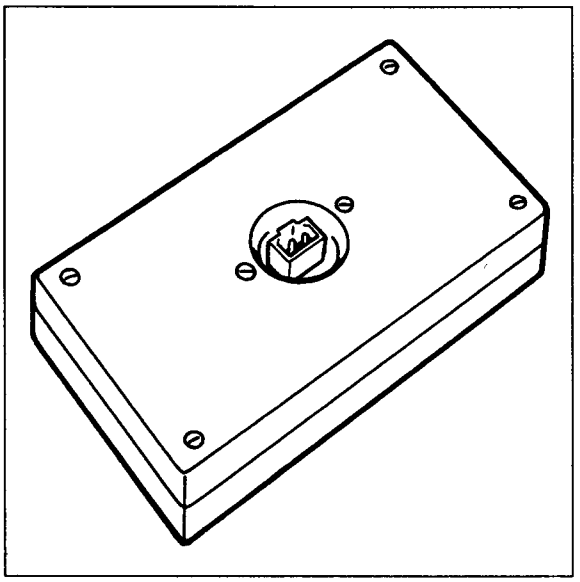

561-68

Special tool 9516/1

Special tools 9516 and 9516/1 are used to check the ignition pill circuits.

If there is a fault in the ignition pill circuits, attach special tool 9516 in place of the airbag units, then erase the fault memory. Switch the ignition off and on again.

The fault can then be localized by means of the diagnosis unit in the control unit.

If the warning light no longer indicates a fault, the airbag unit is defective and must be renewed.

If the warning light again indicates a fault, this is to be sought in the control unit or the wiring.

A fault in ignition pill circuit 1 may also be caused by the contact unit. Disconnect the wiring from the contact unit and attach special tool 9516/1 in place of the contact unit. Erase the fault memory. Switch the ignition off and then on again. If the warning light no longer indicates a fault, the contact unit is defective; if the warning light again indicates a fault, this must be in the control unit or the wiring.

Note

For safety reasons, never drive the vehicle with the special tools installed in place of the airbag units

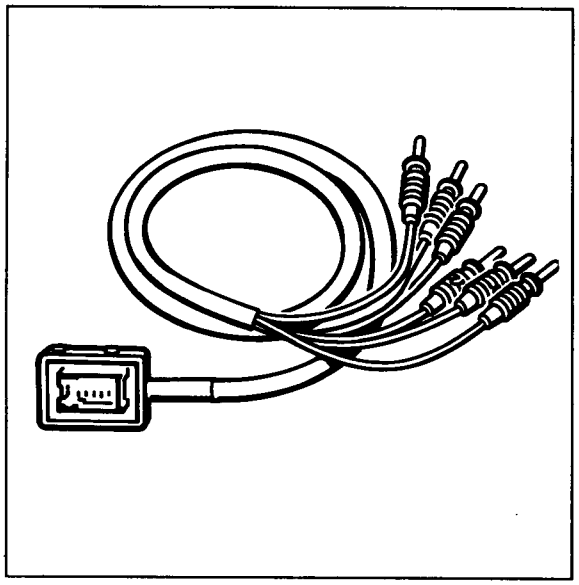

Special Tool 9541 1074-68

Special Tool 9541 is used to check the wiring of the airbag system. It is attached in place of the control unit. For safety reasons, the wiring to the ignition pills cannot be checked with this tool.

Printed in Germany – XVIII, 1992

1. Fault memory

Fault code table

Fault code	Designation of fault	
10	Ignition circuits	– closed once
		– closed several times
		– permanently closed
		– contact resistance to U_B
		– contact resistance to ground
		– coupled 1/3 or 2/3
11	Left front sensor	– resistance too high
12	Right front sensor	– resistance too high
21	Ignition pill circuit 1	– resistance too high / too low
22	Ignition pill circuit 2	– resistance too high / too low
23	Ignition pill circuit 3	– resistance too high / too low
30	Warning light airbag	– Signal implausible
31		– Control unit defective
40 to 47		– Control unit defective
50 to 54		– Control unit defective
60 to 62		– Control unit defective
70	Crash entry	– only if airbag has been triggered

Printed in Germany – XVIII, 1992

Fault, Fault Code	Possible Causes, Elimination, Remarks

Note

After an airbag system fault has been detected and rectified, the fault memory **must** be erased.

Test point 1

Ignition circuits
closed once
Fault code 10

– Replace both front impact sensors.

– Check wiring harness for squeezed sections or chafing and replace if required.

Test point 2

Ignition circuits
closed several times
Fault code 10

– Refer to test point 1.

Test point 3

Ignition circuits
closed permanently
Fault code 10

– Refer to test point 1.

Test point 4

Ignition circuits
Contact resistance
to U_B
Fault code 10

– Check wiring harness to front impact sensors and ignition pills for squeezed sections and chafing. Replace if required.

– Using Special Tool 9541, check wiring to front impact sensors for short to positive terminal, replace if required.

– Check front impact sensors for short to positive terminal.

– If no fault can be detected at the front impact sensors and at the wiring, the control unit must be replaced.

Test point 5

Ignition circuits
Contact resistance
to ground
Fault code 10

– Check wiring harness to front impact sensors and ignition pills for squeezed sections and chafing. Replace if required.

– Using Special Tool 9541, check wiring harness to front impact sensors for short to ground.

– Check front impact sensors for short to ground.

– If no fault can be detected at the front impact sensors and at the wiring harness, replace the control unit.

Printed in Germany – XVIII, 1992

Fault, Fault Code	Possible Causes, Elimination, Remarks
Test point 6 **Ignition circuits** Coupled 1/3 or 2/3 Fault code 10	– Check wiring harness and ignition pills for squeezed sections and chafing. Replace if required. – If no fault can be detected, replace control unit.
Test point 7 **Left front sensor** Resistance too high Fault code 11	– Using an ohmmeter, check front impact sensor at connector. 1. Ohmmeter to terminals 1 and 2 Display: 10 kΩ 2. Ohmmeter to terminals 2 and 3 Display: 0...0.5 Ω – Check control unit wiring to front impact sensor connector with Special Tool 9541 and ohmmeter Display: 0...0.5 Ω – If no fault is detected at the front impact sensor and at the wiring, replace control unit.
Test point 8 **Right front sensor** Resistance too high Fault code 12	– refer to test point 7.

Printed in Germany – XVIII, 1992

Fault, Fault Code	Possible Causes, Elimination, Remarks

Test point 9

Ignition pill circuit 1
Resistance too high / too low
Fault code 21

1. Remove driver airbag – unit.
2. Attach Special Tool 9516 in place of airbag unit.

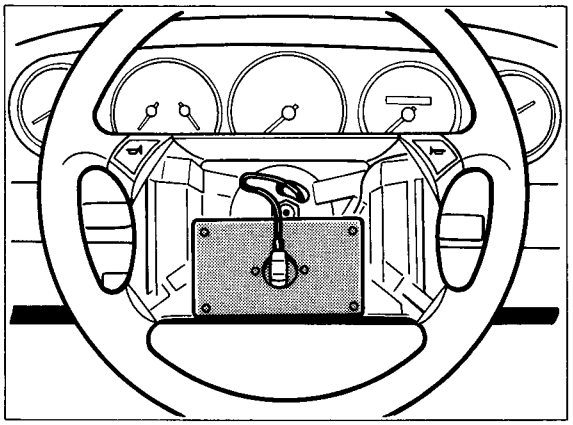

3. Erase fault memory.
4. Check if fault is still present.

   a) Replace airbag unit if the fault is no longer present.

   b) If the fault is still present, disconnect the contact unit wiring and attach Special Tool 9516/1.

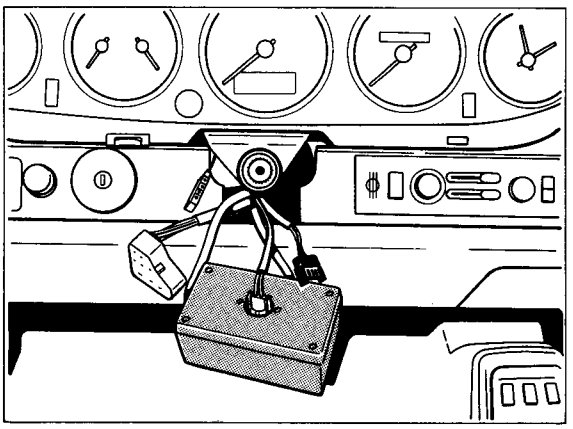

5. Erase fault memory.
6. Check if fault is still present.

   a) Replace contact unit if the fault is no longer displayed.

   b) If the fault is still present, check wiring harness for squeezed sections and chafing. Replace if required.

Printed in Germany – XVIII, 1992

Fault, Fault Code	Possible Causes, Elimination, Remarks
	c) If no fault is detected in the wiring harness, replace the control unit.
Test point 10 **Ignition pill circuit 2** Resistance too high/too low Fault code 22	Note Ignition pill circuit 2 at the passenger side airbag is the leftmost of the two circuits. 1. Disconnect plug at passenger side airbag unit. 2. Attach Special Tool 9516. 3. Erase the fault memory. 4. Check if fault is still present. a) If the faut is no longer present, replace passenger side airbag unit. b) If the fault is still present, check wiring harness for squeezed sections and chafing. Replace if required. c) If no fault is detected in the wiring harness, replace the control unit.
Test point 11 **Ignition pill circuit 3** Resistance too high/too low Fault code 23	Ignition pill circuit 3 at the passenger-side airbag is the rightmost of the two circuits. – refer to test point 10.
Test point 12 **Airbag warning light** Signal implausible Fault code 30	– Check warning lamp, replace if required. – Check wire from control unit to instrument cluster or to diagnosis socket, respectively, for short to positive terminal. – Check instrument cluster.
Test point 13 **Control unit defective** Fault code ...	– Replace control unit. Note This fault message may display several fault codes: 31, 40 to 47, 50 to 54 and 60 to 62.

Printed in Germany – XVIII, 1992

Fault, Fault Code	Possible Causes, Elimination, Remarks
Test point 14:	
Unknown fault code fault code xxx	– Check secondary ignition circuit. – Erase fault memory.

Printed in Germany – XVIII, 1992

2. Failure time

The Failure Time menu item displays the time elapsed since the first fault was stored in the fault memory.

The maximum time that can be displayed is 99 hours and 59 minutes. If this time is exceeded, the ">" sign is displayed ahead of the hours.

3. Results

The Results menu item displays the crash data.

Printed in Germany – XVIII, 1992

Checking seat heating

1. Remove switch cover (4 screws).

2. Disengage seat heating switch and pull out switch (take care not to damage the wire).

3. Switch on ignition.

4. Connect voltmeter to term. 1 (positive) and term. 2 (negative).

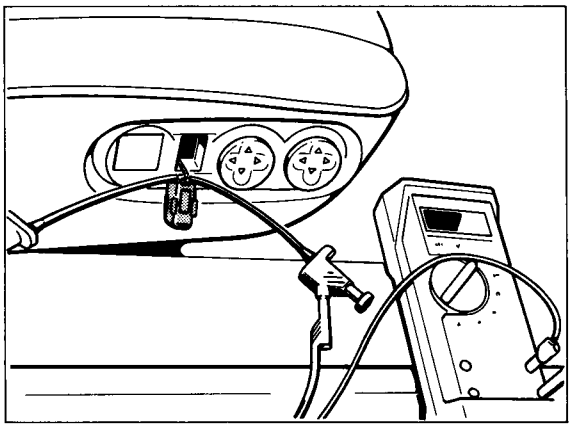

1343 - 72

Display: approx. 5 V

Note

If no voltage is displayed, check power supply according to wiring diagram.

5. Connect voltmeter to term. 2 (negative) and term. 3 (positive).
   Display, depending on potentiometer setting: approx. 2 - 3 V

6. Push tip switch into "on" position and keep it in this position.
   Display: approx. 5 V

7. Push tip switch into "off" position and keep it in this position.
   Display: approx. 0 V

8. Turn knurled wheel of potentiometer all the way up.
   Display: approx. 3 V

9. Turn knurled wheel of potentiometer all the way down. The voltage must then drop to approx. 2 V.

10. Remove seat and connect to Special Tool 9269.

11. Switch on seat heating and set to maximum heating output.

12. Measure voltage at 2-pin connector marked with digit 3.

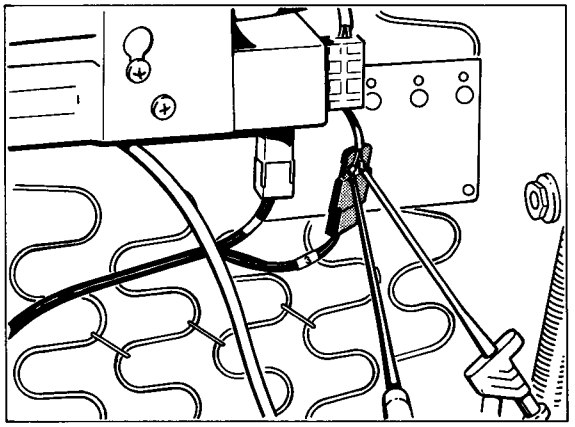

1344 - 72

When the seat heating is switched on, the voltage oscillates between 0 V and approx. 12 V (clocked voltage).

Printed in Germany – XX, 1993

Checking resistance of heater elements

Note

Use a digital ohmmeter for the measurements.

1. Disconnect connector marked with digit 3.

2. Zero out ohmmeter.

3. Connect ohmmeter on pin side.
   Display at 20° C ambient temperature:
   1.5 to 1.8 Ω

Printed in Germany – XX, 1993

Calibrating controllable seat heating

Control units

Note

The seat heating must be calibrated after the control unit or heating elements have been replaced.

Installation position

At the bottom of the seat

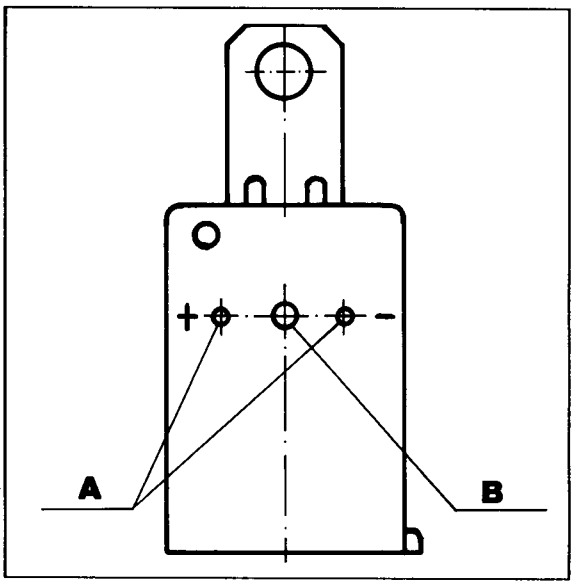

165 - 72

Control unit for seat heating with seat-position control

A - measuring point (V)
B - calibration potentiometer

Printed in Germany – XX, 1993

Tools

1. Digital–voltmeter with an internal resistance (Ri) ≥1 MΩ.
2. Two measuring probes with a maximum diameter of 2 mm.
3. Thermometer (as recommended in the Workshop Handbook).
4. 2 mm wrench.
5. Two auxiliary cables to supply voltage to the removed seat (terminals15 and 31). Use adapter cable 9269 for seat-position control.

Calibration procedure

1. Store the seat to be calibrated in the working area until it has assumed the ambient temperature.
2. Provide power supply.

Note

Do not switch on the seat heating. If switched on unintentionally, the seat must cool down until the heating elements have again adopted the ambient temperature.

3. Measure the ambient temperature and refer to the table for the relevant voltage value.
4. Connect the voltmeter to the control unit (A).
5. Set the voltage value on the calibration potentiometer (B) so that it corresponds to the appropriate value for the ambient temperature.

Table

Ambient temperature in°C	Voltage in V
0	1.50
2	1.55
4	1.60
6	1.65
8	1.70
10	1.75
12	1.80
14	1.85
16	1.90
18	1.95
20	2.00
22	2.05
24	2.10
26	2.15
28	2.20
30	2.25
32	2.30
34	2.35
36	2.40
38	2.45
40	2.50
42	2.55
44	2.60
46	2.65
48	2.70

Functional check

Switch on seat heating for approx. 10 sec. with maximum heating power. After switching off, measure the voltage at the control unit. The value measured now must be considerably higher.

Printed in Germany – XX, 1993

Carrera 2

Page

Body, Front

Scope of conversion for 911 Carrera RS - Body-in-white . . . . . 50 - 101

Body, Center

Scope of conversion for 911 Carrera RS - Body-in-white . . . . . 51 - 101

Body, Rear

Scope of conversion for 911 Carrera RS - Body-in-white . . . . . 53 - 101

Convertible Top, Hardtop

Removing and installing folding top - 911 Speedster . . . . . 61 - 101

Glasses, Window Control

Speedster - Removing and installing windshield - 911 Speedster . . . . . 64 - 101

Exterior equipment

Removing and installing the underbody cladding – Tiptronic . . . . . 66 - 101

Printed in Germany – XXI, 1994

Scope of conversion for 911 Carrera RS – Body-in-white

Instructions for conversion of 911 Carrera 2 body-in-white to 911 Carrera RS (Base and NGT versions)

The 911 Carrera 2 body-in-white is the basis for the body of the 911 Carrera RS

Printed in Germany – XVI, 1992

Scope of conversion for 911 Carrera RS – Body-in-white

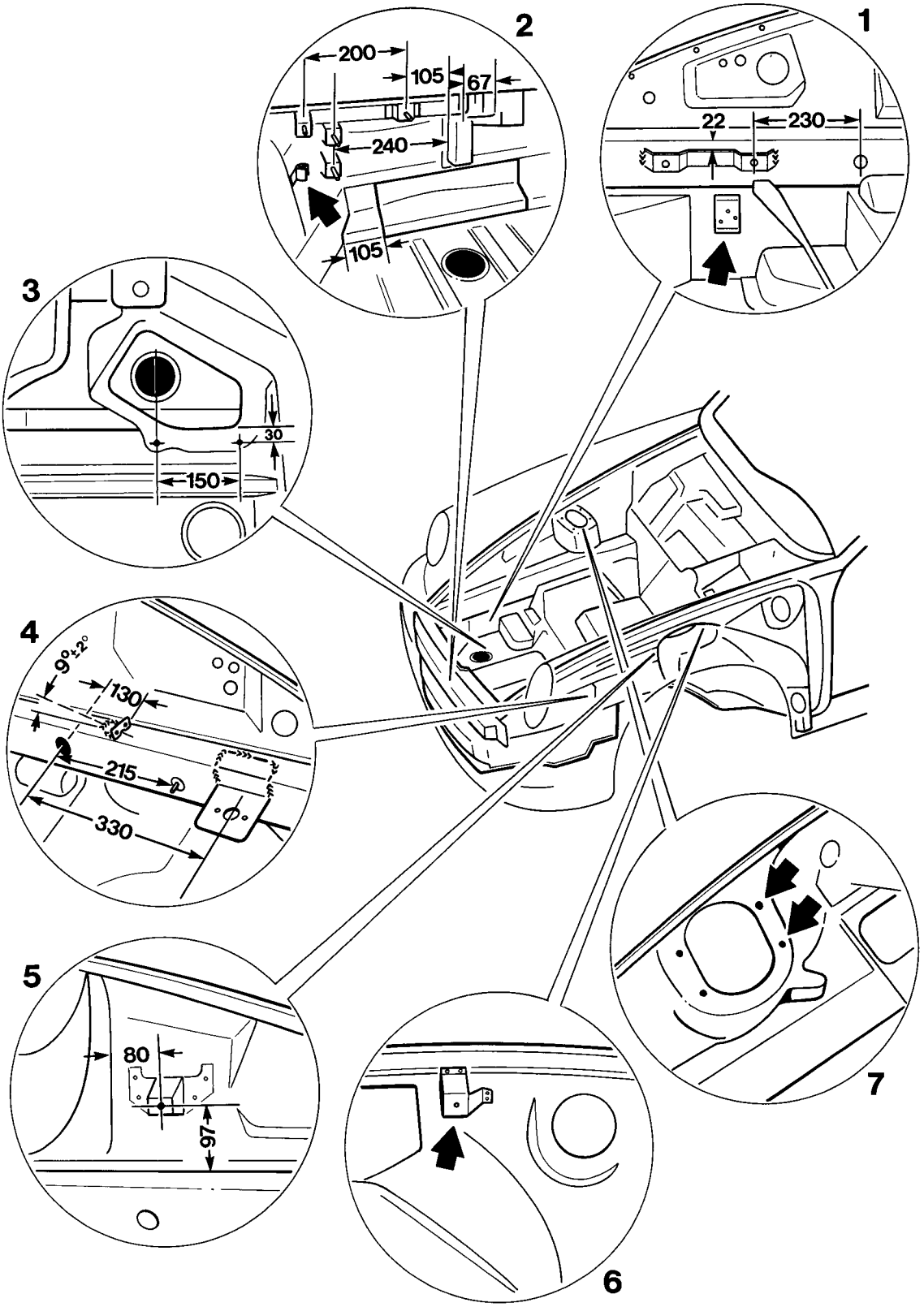

Scope of conversion for 911 Carrera RS – Body-in-white

Instructions for conversion of 911 Carrera 2 body-in-white to 911 Carrera RS (Base and NGT versions)

No.	Operation	Instructions
1	Remove bracket for lock control **Base version only:** Weld in bracket for ABS control unit	Using a spotweld cutter and angle grinder, separate weld joints of lock control bracket. MIG-weld bracket for ABS control unit to front right-hand side member, running a full seam.
2	**Only base version:** Remove bracket for front cover. Weld in reinforcement for front closing section, trunk protection and bracket for pump cover	Using a spotweld cutter, separate spotwelds of bracket for front cover on side members. MIG-weld reinforcement for towing hook support, trunk protection and bracket for pump cover, running an intermittent full seam.
3	**Base version only:** Weld in auxiliary battery bracket	MIG-weld a welding nut (8 mm A/F) into the reinforcement for the battery bracket.
4	**Base version only:** Weld consoles and welded studs to side member	Weld consoles and welded studs for battery disconnecting point to side member.
5	Weld in bracket for intensive cleaning system	MIG-weld bracket for intensive cleaning system to wheel house, running a full seam.
6	**Base version only:** Remove bracket for water tank	Separate top water tank bracket from left-hand front wheel house, using a spotweld cutter.
7	Drill holes for spring strut tower to 10 mm dia.	Drill the two spring-strut tower holes in the top side-member overlap area to 10 mm dia.

Printed in Germany – XVI, 1992

Scope of conversion for 911 Carrera RS – Body-in-white

Instructions for conversion of 911 Carrera 2 body-in-white to 911 Carrera RS (Base and NGT versions)

The 911 Carrera 2 body-in-white is the basis for the body of the 911 Carrera RS

Printed in Germany – XVI, 1992

Scope of conversion for 911 Carrera RS – Body-in-white

Printed in Germany – XVI, 1992

Scope of conversion for 911 Carrera RS – Body-in-white

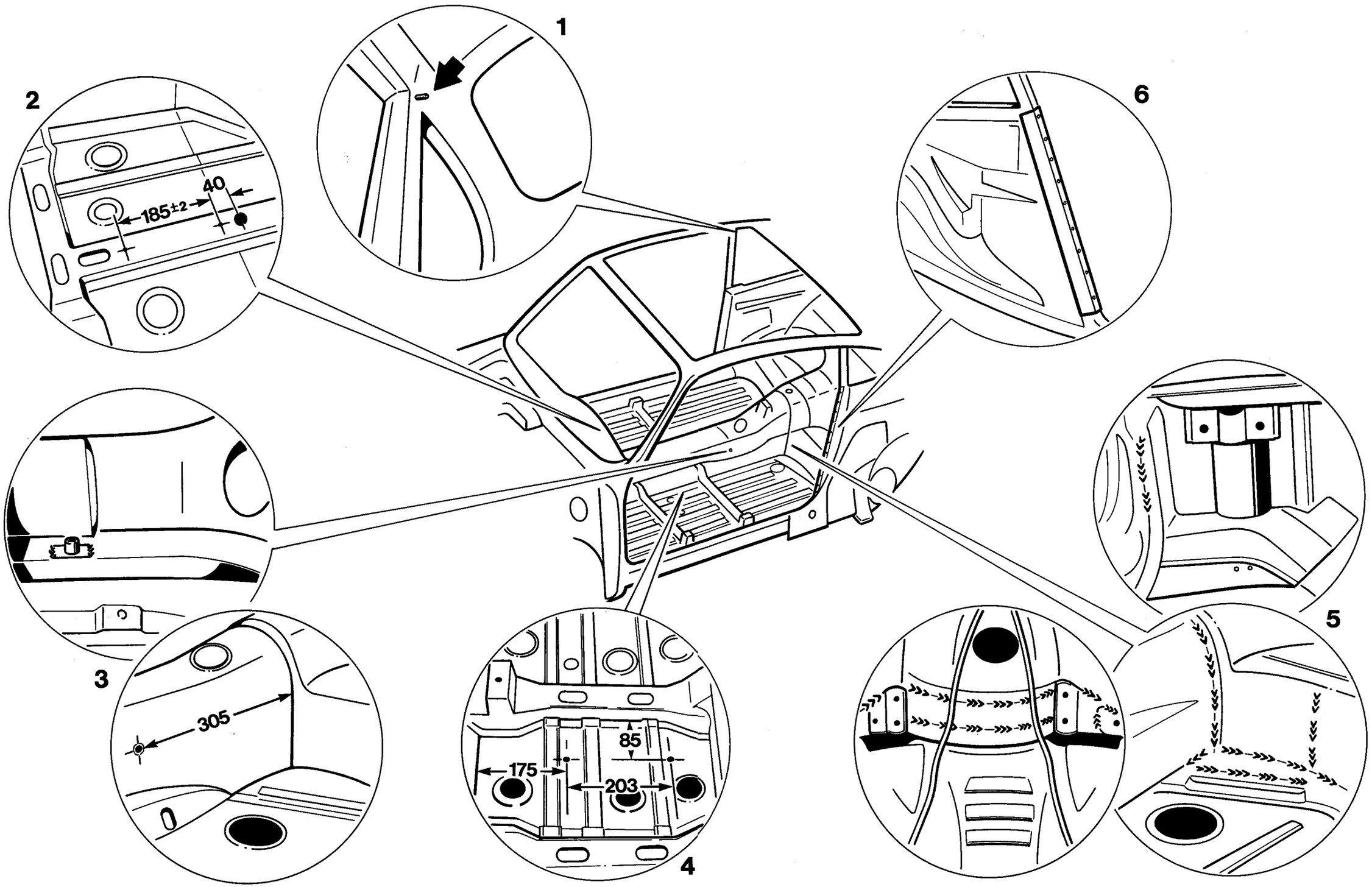

1142 - 51

Scope of conversion for 911 Carrera RS – Body-in-white

Instructions for conversion of 911 Carrera 2 body-in-white to 911 Carrera RS (Base and NGT versions)

No.	Operation	Instructions
1	**Base version only:** Remove weld-on bolts for coat hook mounting	Using an angle grinder, remove weld-on bolts for coat hook mounting from the B-post reinforcement.
2	**Base version only:** Insert M8 pop rivet nuts into floor section member	Drill two 11.0 mm dia. holes for fire extinguisher bracket into the passenger side of the floor section member and use a pop rivet nut gun to insert the M8 pop rivet nuts.
3	**Base version only:** Weld in lap belt mounting	Drill 13.0 mm dia. holes for lap belt mounting into tunnel. Insert lap belt mounting into tunnel and MIG-weld from outside along front sides of lap belt mounting, running a full seam.
4	Weld in crotch belt mounting	Drill 16.2 mm dia. holes for crotch belt mounting into floorpan. Insert crotch belt mounting into floorpan and MIG-weld from outside along front sides of crotch belt mounting, running a full seam.
5	Weld tunnel, floorpan with heel plate and rear end for safety	MIG-weld reinforcement of rear floorpan with heel plate and reinforcement for tunnel, tunnel with tunnel reinforcement and heel plate with seat well. **Safety welds:** **Length of welding seam = 25 mm** **Distance between seams = 25 mm** **Execution of seam = on both sides**
6	**Base version only:** Remove angular surround	Use a spotweld cutter to separate spotwelds of the angular surround.

Printed in Germany – XVI, 1992

Scope of conversion for 911 Carrera RS – Body-in-white

Instructions for conversion of 911 Carrera 2 body-in-white to 911 Carrera RS (Base and NGT versions)

The 911 Carrera 2 body-in-white is the basis for the body of the 911 Carrera RS

Printed in Germany – XVI, 1992

Scope of conversion for 911 Carrera RS – Body-in-white

Printed in Germany – XVI, 1992

Scope of conversion for 911 Carrera RS – Body-in-white

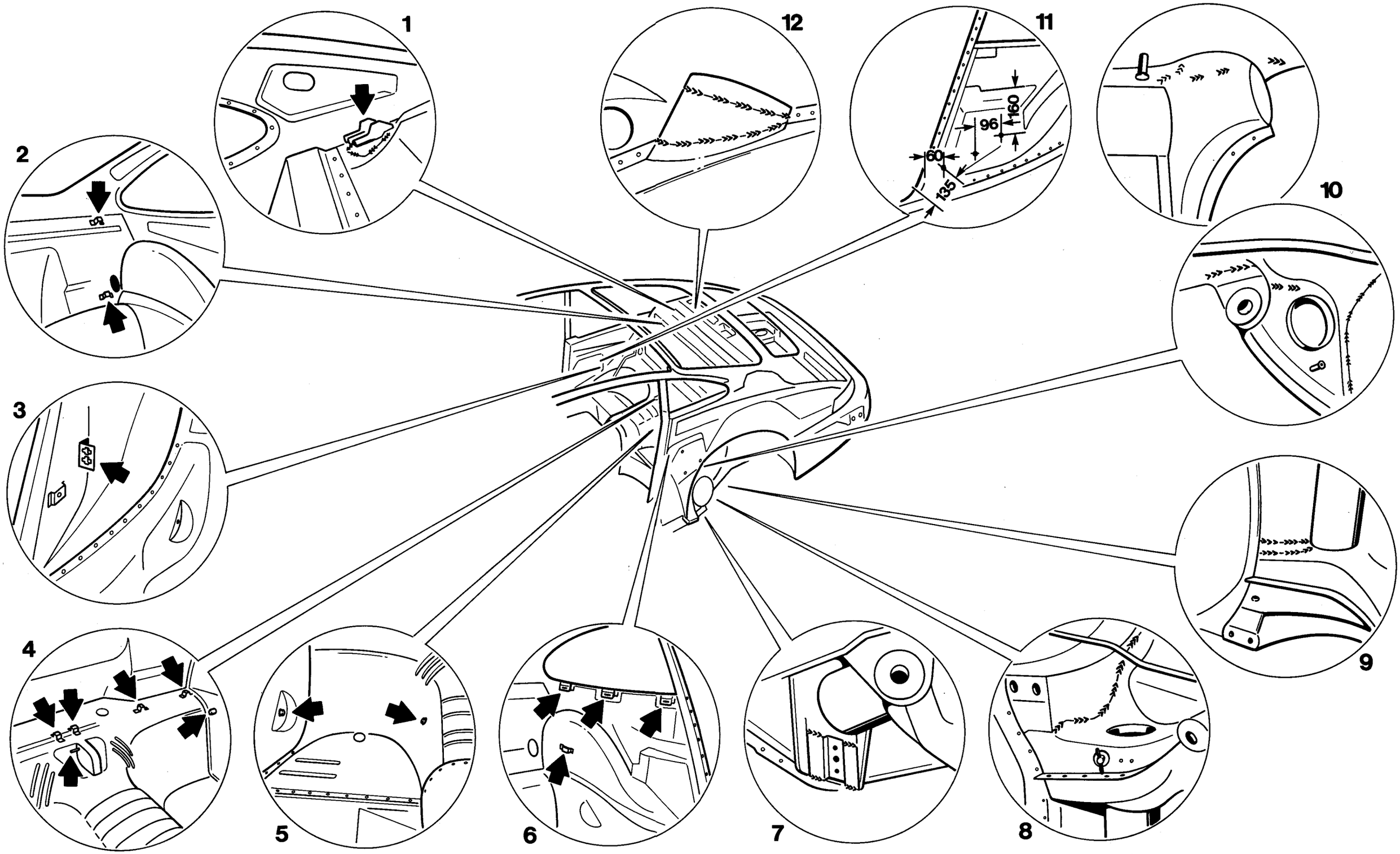

Scope of conversion for 911 Carrera RS – Body-in-white

Instructions for conversion of 911 Carrera 2 body-in-white to 911 Carrera RS (Base and NGT versions)

No.	Operation	Instructions
1	**Base version only:** Remove weld-on bolts for coat hook mounting	Using an angle grinder, remove weld-on bolts for coat hook mounting from the B-post reinforcement.
2	**Base version only:** Insert M8 pop rivet nuts into floor section member	Drill two 11.0 mm dia. holes for fire extinguisher bracket into the passenger side of the floor section member and use a pop rivet nut gun to insert the M8 pop rivet nuts.
3	**Base version only:** Weld in lap belt mounting	Drill 13.0 mm dia. holes for lap belt mounting into tunnel. Insert lap belt mounting into tunnel and MIG-weld from outside along front sides of lap belt mounting, running a full seam.
4	Weld in crotch belt mounting	Drill 16.2 mm dia. holes for crotch belt mounting into floorpan. Insert crotch belt mounting into floorpan and MIG-weld from outside along front sides of crotch belt mounting, running a full seam.
5	Weld tunnel, floorpan with heel plate and rear end for safety	MIG-weld reinforcement of rear floorpan with heel plate and reinforcement for tunnel, tunnel with tunnel reinforcement and heel plate with seat well. **Safety welds:** **Length of welding seam = 25 mm** **Distance between seams = 25 mm** **Execution of seam = on both sides**
6	**Base version only:** Remove angular surround	Use a spotweld cutter to separate spotwelds of the angular surround.

Printed in Germany – XVI, 1992

Scope of conversion for 911 Carrera RS – Body-in-white

Instructions for conversion of 911 Carrera 2 body-in-white to 911 Carrera RS (Base and NGT versions)

No.	Operation	Instructions
1	Remove locking devices at upper section of rear wall	Use an angle grinder to separate the welds between the locking devices and the upper section of the rear wall.
2	**Base version only:** Remove bracket for rear wall trim panel	Separate welds of rear wall trim panel brackets using a spotweld cutter.
3	**Base version only:** Remove bracket for connector	Separate spotwelds for connector bracket using a spotweld cutter.
4	Remove mounts and threaded bushings for spare seat backrests **Base version only:** Remove mounting pads for carpet	Separate weld for spare seat mount using an angle grinder. Cut threaded bushings for spare seat backrests at the side members using an angle grinder. Use a spotweld cutter to separate spotwelds between carpet mounting pads and seat pan.
5	Remove nuts for belt mounting from bearing cups and side members	Cut nuts for seat belt mounting in seat pan and side member area using an angle grinder. MIG-weld remaining holes.
6	**Base version only:** Remove brackets for rear finisher strips and rear side trim panels	Separate spotwelds of brackets for rear finisher strips and rear side trim panels with a spotweld cutter.
7	Weld in reinforcements for stabilizer consoles	MIG-weld reinforcements for stabilizer consoles running an intermittent full seam.

Printed in Germany – XVI, 1992

No.	Operation	Instructions
8	Weld inner bearing cups and connecting member for safety	MIG-weld inner bearing cups to connecting member. **Safety weld:** **Length of seam = 25 mm** **Distance between welding seams = 25 mm**
9	Weld rear-axle crosstube and heel plate for safety	MIG-weld rear-axle crosstube to kickplate. **Safety weld:** **Length of seam = 25 mm** **Distance between welding seams = 25 mm**
10	Weld in bearing cup stiffener	MIG-weld bearing cup stiffener to bearing cup and rear-axle crosstube, running an intermittent full seam.
11	**Base version only:** Weld mounting stud for seat belt cover	Weld two weld-on studs each for fitting of the seat belt cover to the rear quarter panels.
12	Weld rear-axle crossmember, shock absorber mounts and shock absorber supports for safety	MIG-weld rear-axle crossmember to shock absorber mounts and shock absorber supports, running a continuous seam. **Safety weld:** **Length of weld = 30 mm** **Distance between seams = 25 mm** **Execution of seam = continuous**

Printed in Germany – XVI, 1992

Removing and installing folding top

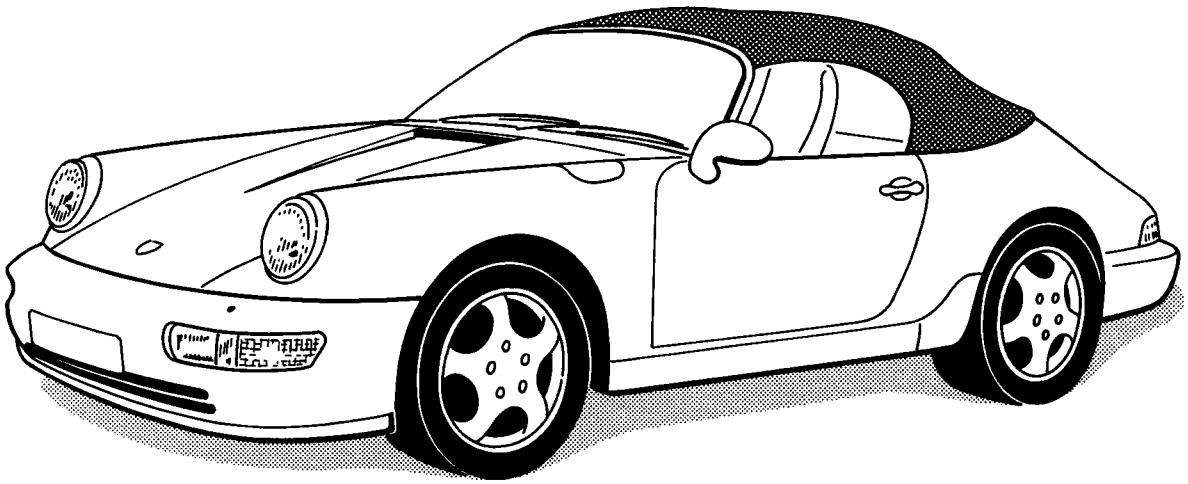

1804-61

Printed in Germany – XXI. 1994

Removing and installing folding top

Removing folding top

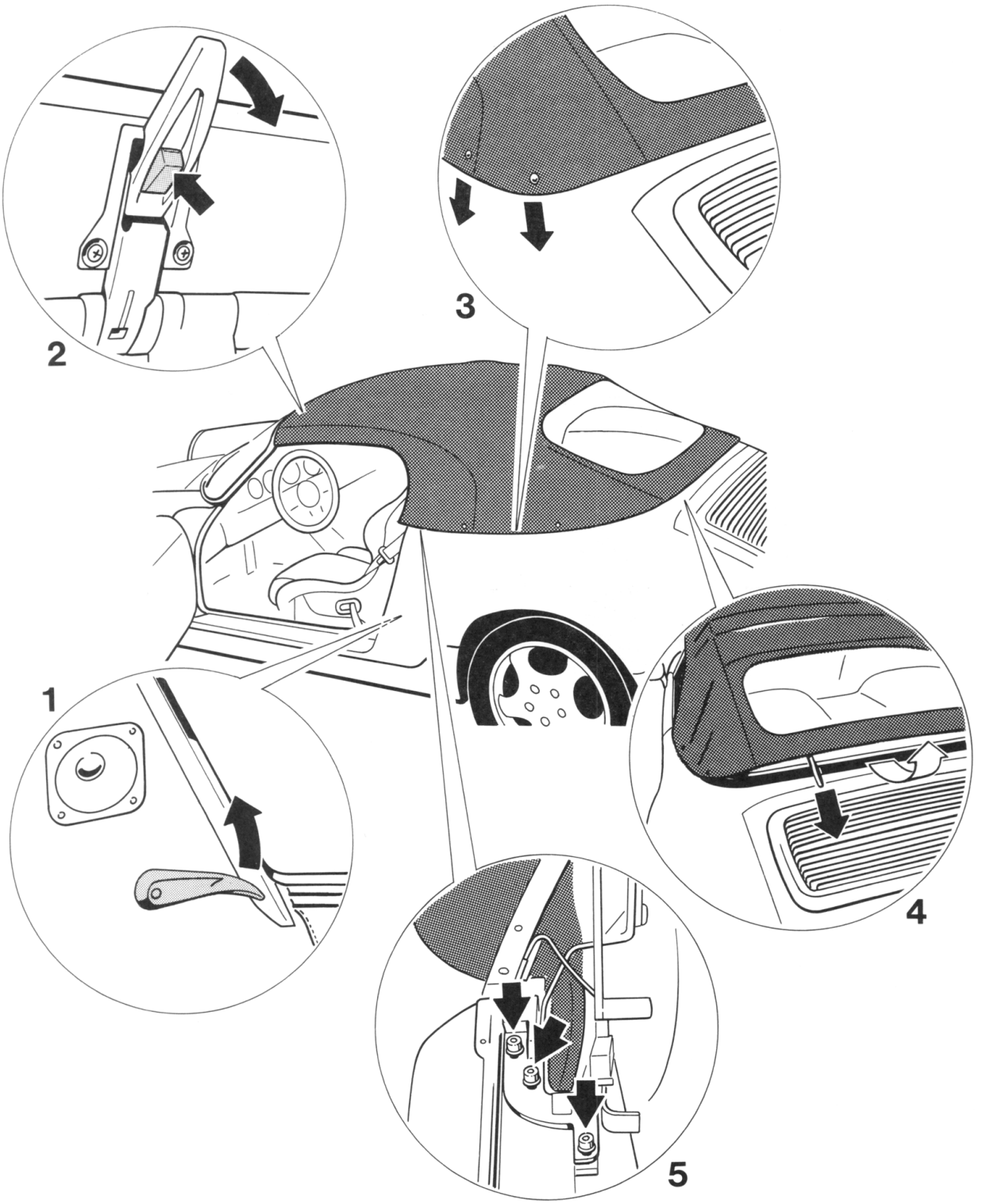

Removing and installing folding top

Removing folding top

No.	Operation	Instructions
	Open both doors	
1	Unlatch rear cover	Unlatch rear cover by pulling up the lever on the left-hand rear side trim panel.
2	Open locks	Flip down sun visors. Press red locking buttons of folding top locks along the soft top frame towards inside and open folding top locks completely.
3	Release side hooks	Raise rear cover slightly and release soft top side hooks from rear cover by moving them downward.
4	Release rear soft top sections	Pull out pull straps from below the rear cover. Pull soft top at pull cords towards rear and disengage from rear cover. Flip rear window section forward over the folding top. Raise rear cover with both hands.
5	Undo fastening screws	Undo fastening screws from folding top and lift folding top off the vehicle.

Printed in Germany – XXI. 1994

Removing and installing folding top

Installing folding top

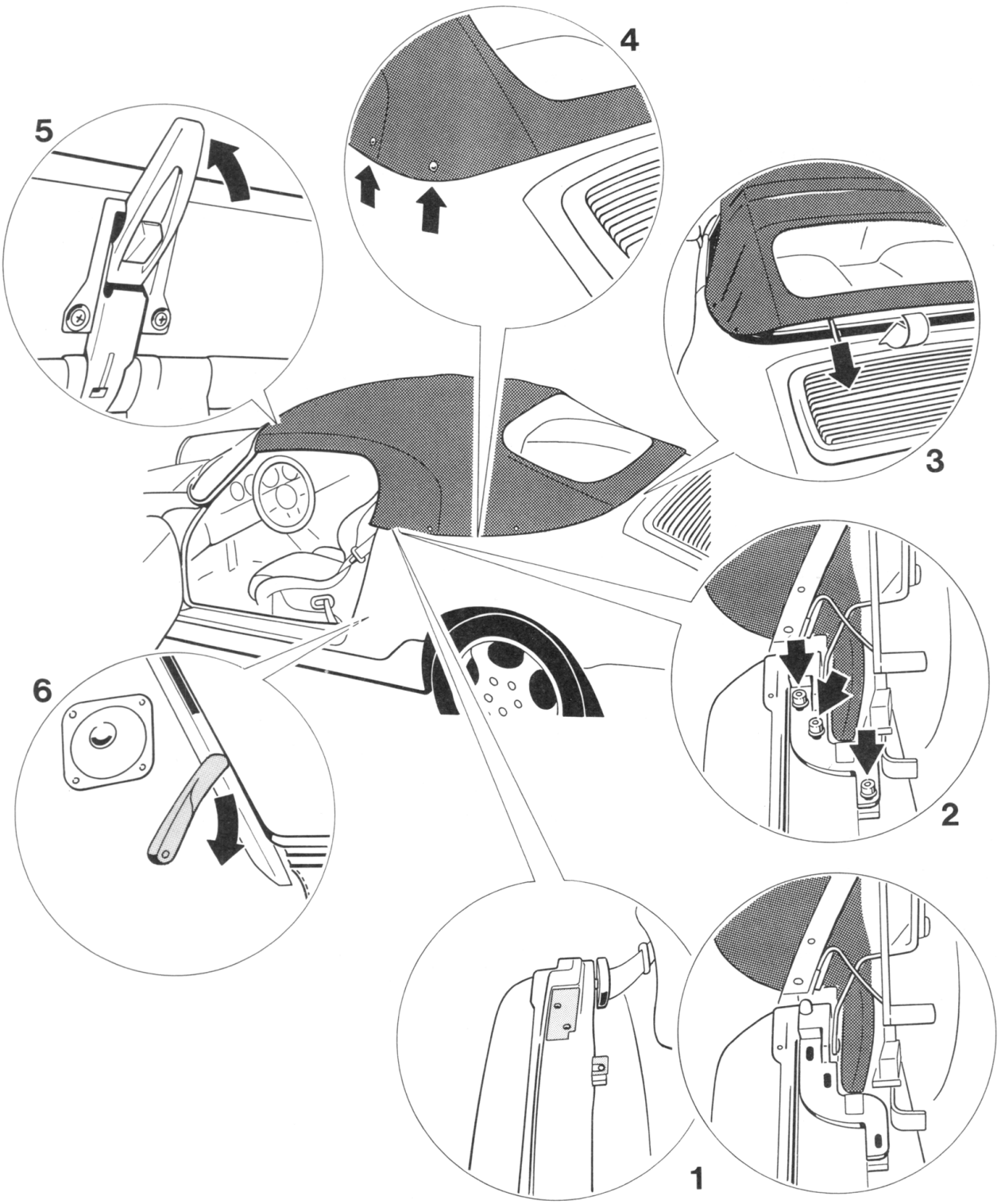

Removing and installing folding top

Installing folding top

No.	Operation	Instructions
1	Place soft top onto vehicle	Place folding top on mounting points of vehicle. To adjust the folding top height, place spacers under the soft top supports.
2	Fit soft top to vehicle	Fit soft top to soft top mounts of vehicle using M 8 x 20 pan-head screws and washers. They also provide fore/aft adjustment of the soft top. Tightening torque: 23 Nm (17 ftlb.).
3	Engage soft top at rear	Flip down rear cover, fold back rear window section over rear cover. Pull soft top rearwards at pull straps and engage into rear cover. Pull the pull straps under the rear cover.
4	Engage side hooks	Raise rear cover slightly and engage side hooks of soft top into rear cover.
5	Lock latches	Pull down soft top at handle cover, engage soft top locks and latch the locks.
6	Latch rear cover	Push down lever of rear side trim panel to latch the rear cover.

Printed in Germany – XXI, 1994

Speedster – Removing and installing windshield

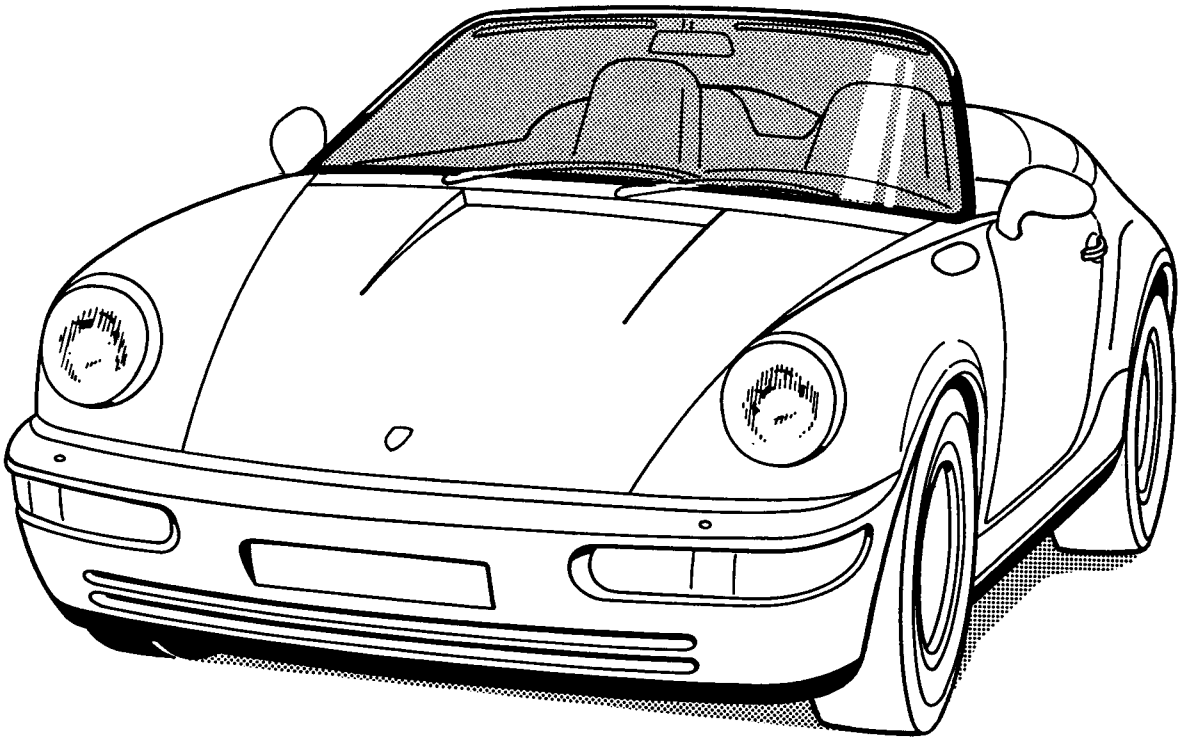

1764 - 64

Printed in Germany – XXI. 1994

Speedster – Removing and installing windshield

Removing windshield

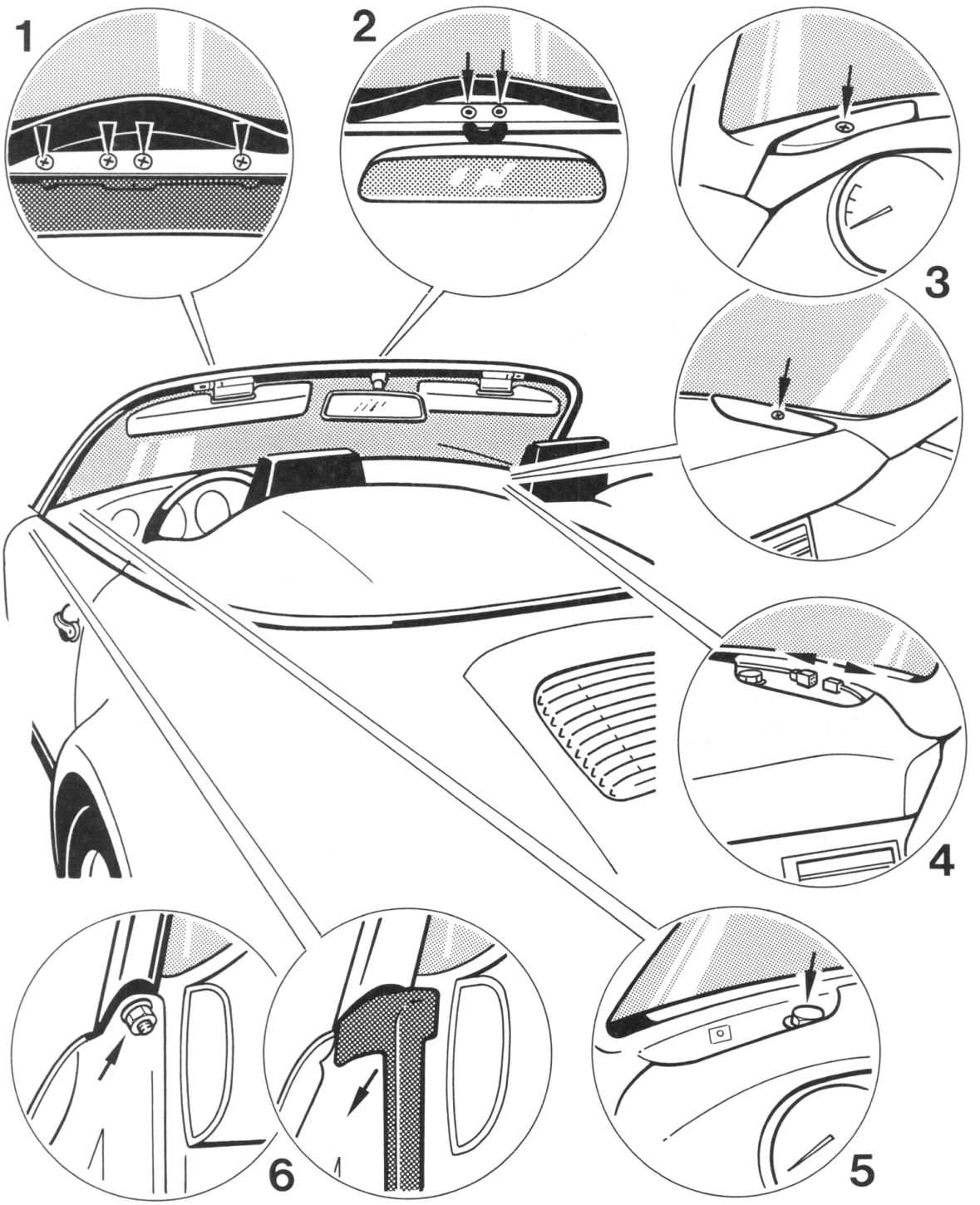

Printed in Germany – XXI. 1994

Speedster – Removing and installing windshield

Removing windshield

No.	Operation	Instructions
	Open soft top	
	Flip up windshield wiper arms	
1	Unscrew sliding block guides and sun visors	Pull windshield frame seal out of windshield frame section in the sliding block guide and sun visor areas and undo oval-head screws.
2	Unscrew interior rearview mirror	Pull windshield frame seal out of windshield frame section and undo hexagon head (Torx) screws.
3	Unscrew instrument panel trim covers	Undo fastening screws of instrument panel trim covers and take out trim covers.
4	Disconnect windshield antenna connector	Pull off wiring connector of windshield antenna.
5	Unscrew windshield mounts from instrument panel	Use Special Tool 9544 to unbolt M 10 x 20 mounting bolts from mounting locations in instrument panel.
6	Unbolt windshield mounts from A-pillars	Remove molded sections and door seals from A-pillars and undo M10 hexagon head nuts.
	Lift windshield off the vehicle	

Printed in Germany – XXI. 1994

Speedster – Removing and installing windshield

Installing windshield

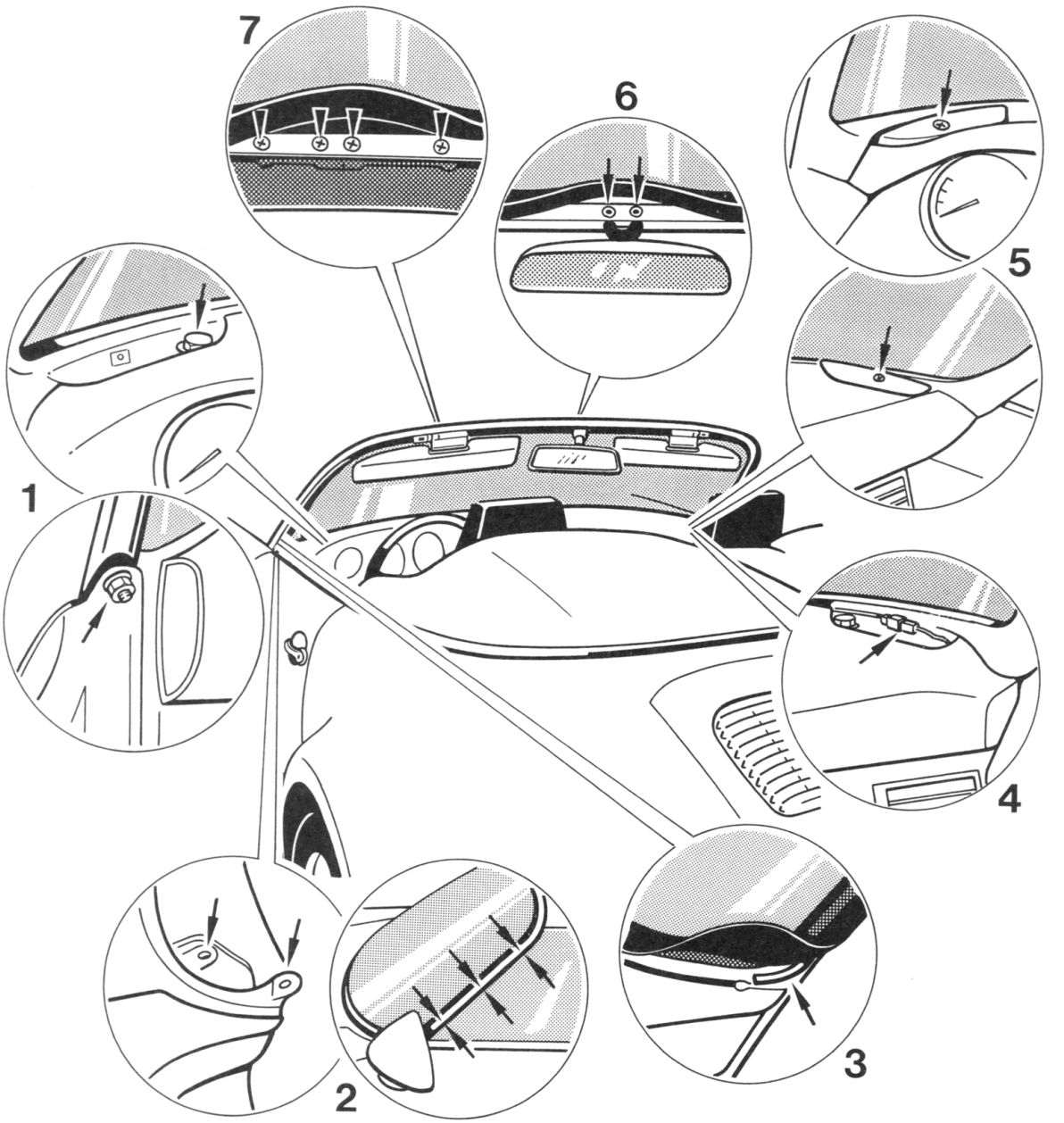

Printed in Germany – XXI. 1994

Speedster – Removing and installing windshield

Installing windshield

Check windshield frame seals before fitting the windshield, replace windshield seal if required.

No.	Operation	Instructions
1	Place windshield into position and tighten	Place center of windshield over spotweld flange and engage into mounts at A-pillars. Tighten windshield with M 10 x 20 hexagon head bolts complete with washers. Tightening torque: 25 Nm (18 ftlb.).
2	Adjust windshield	To align the windshield with the door windows by adjusting windshield height and inclination, insert spacing washers at the mounting points between the windshield frame and body.
3	Route drain hose	Route the drain hose of the windshield seal so that the water can flow off in the opening provided between fender and cowl panel.
4	Connect windshield antenna	Connect windshield antenna connector.
5	Screw trim covers to instrument panel	Adjust trim covers to instrument panel and fit with 4.2 x 22 hexagon head self-tapping screws.
6	Screw interior rearview mirror	Fit interior rearview mirror to windshield frame using Torx M 5 x 12 flat-head screws. Tightening torque: 5.6 Nm (4 ftlb.).
7	Screw sun visors and sliding block guides into place	Fit sun visors and sliding block guides with M 4 x 8 oval-head screws to windshield frame. Clip windshield frame seal into windshield frame. Flip down wiper arms and close soft top.

Printed in Germany – XXI. 1994

Removing and installing the underbody cladding – Tiptronic

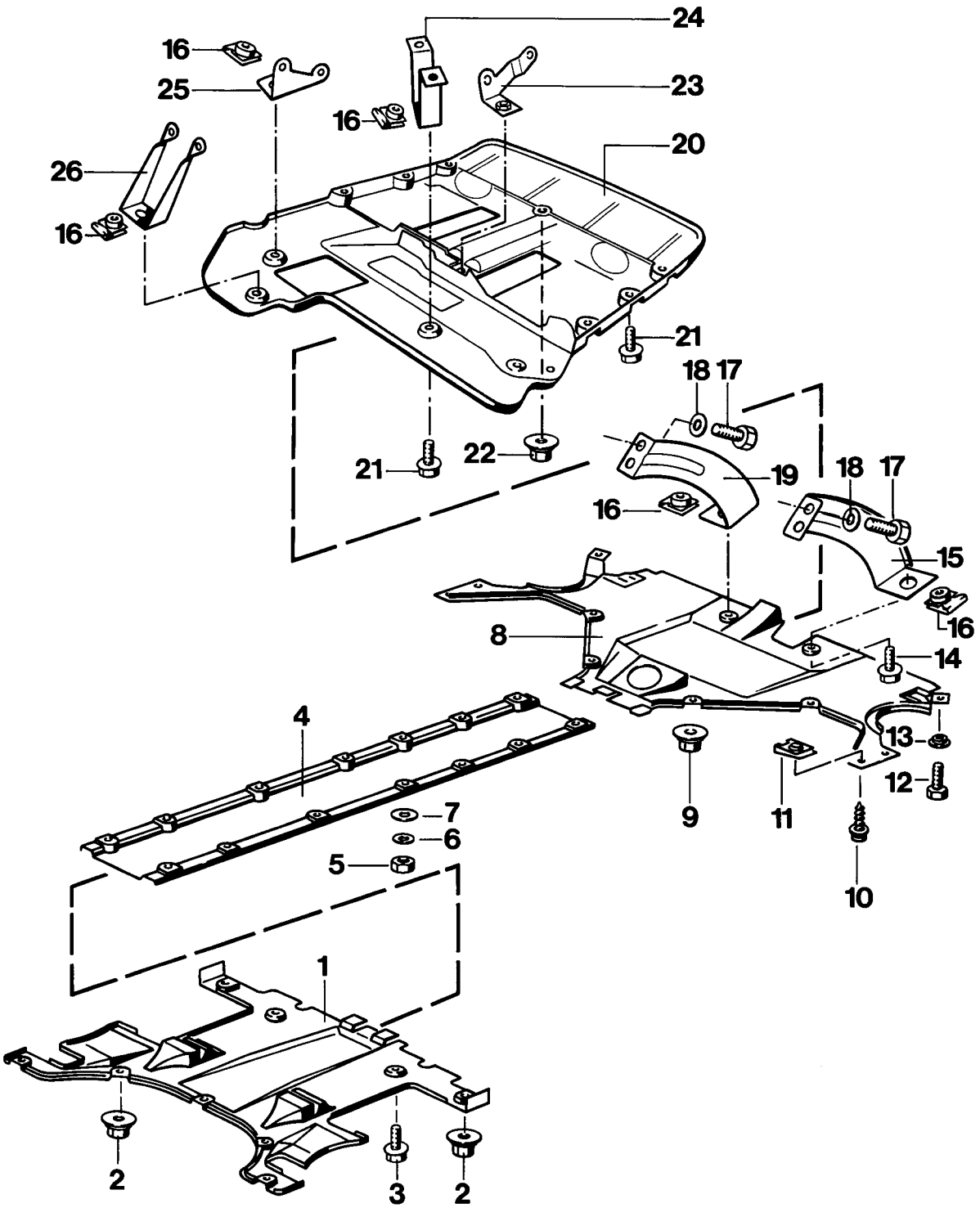

Printed in Germany – VI,1990

Removing and installing the underbody cladding – Tiptronic

No.	Designation	Qty.	Note: Removal	Installation
1	Underbody cladding, front	1		Assemble with underbody cladding, middle
2	Plastic nut	7		Check, replace if necessary
3	Screw with washer assembly M 6 x 12	2		
4	Underbody cladding, middle	1		Assemble with underbody cladding, transmission
5	Hexagon nut M 6	14		
6	Plain washer B 6.4	14		
7	Washer 9.5 x 22 x2	14		Check, replace if necessary
8	Underbody cladding, transmission	1		Secure at holder, left (15) and holder, right (19)
9	Plastic nut	4		Check, replace if necessary
10	Screw with washer assembly 4.8 x 16	4		
11	Sheet-metal nut 4.8			Check, replace if necessary
12	Hexagon screw M 6 x 16	2		
13	Spacer disk	2		
14	Screw with washer assembly M 6 x 16	2		
15	Holder, left	1		Secure at gusset plate, rear axle transverse tube

Printed in Germany – VI,1990

No.	Designation	Qty.	Note: Removal	Installation
16	Nut holder	2		Check, replace if necessary
17	Hexagon screw M 6 x 16	3		
18	Plain washer A 6.4	3		
19	Holder, right	1		Secure at gusset plate, rear axle transverse tube
20	Underbody cladding, engine	1		Secure at the holders 23 to 27 and with the mounting points on the engine encapsulation
21	Screw with washer assembly M 6 x 20	14		
22	Locking nut M 6 with fixed washer	1		Must be replaced by a new part for assembly of the underbody cladding, engine
23	Holder on engine, front	1	Need not be removed to dismantle the underbody cladding, engine	
24	Holder on transmission, bottom left	1	Need not be removed to dismantle the underbody cladding, engine	
25	Holder on transmission, bottom right	1	Need not be removed to dismantle the underbody cladding, engine	
26	Holder on differential	1	Need not be removed to dismantle the underbody cladding, engine	

Printed in Germany – VI,1990

Workshop Manual

911

Carrera 4

Dr. Ing. h.c. F. Porsche Aktiengesellschaft

The workshop manual is only for the internal use of the Porsche Dealer Organization.

© 1988 Dr. Ing. h.c. F. Porsche
Aktiengesellschaft
Technical Service Department
D-7140 Ludwigsburg

All rights reserved – Printed in Germany

WKD 482520

Survey of Information Published in Technical Manual beginning in 1985

6 Cyl. 8

	TI/QI		No.	911 C2/C4	911		911 Turbo	Remarks, Model, Also refer to...	Date
1985									
– Automatic Heating Regulation System	Q		1/85		●			Coupe and Targa	15.02.85
– Heat Exchanger Heater Hose	Q		2/85		●			Hose too long	07.06.85
– Air Conditioner Blower Switch	Q		3/85		●		●	Faulty switch	07.06.85
1986									
– Heater Blower Control Unit	Q		1/86		●		●	1984 Model on/faulty	16.01.86
– Air Conditioner Charging	Q		2/86		●		●	Idle speed	10.10.86
– Air Conditioner Evaporator	Q		3/86		●		●	1986 Models on/noise	25.11.86
1987									
– Heater Additional Blower	Q		1/87		●		●	Fuse 10 amps	18.06.87
– Rear Window Wiper Air Conditioner/Condenser	Q		2/87		●			Coupe and Targa	17.07.87
– Air Conditioner A/C Compressor	Q		3/87		●		●	Warranty	24.11.87
1988									
– Heater Control Unit / Housing	Q		1/88		●		●	Side Housing Covers	30.05.88
– Air Conditioner Condenser Blower	Q		2/88		●		●	7.5 A Fuse	21.06.88
1989									
1990									
– Fan motors Heating/Air-conditioning system	T		1/90	●				2 additional screws. Wihite dot.	23.03.90

♦ = Conversion instructions or workshop campaign
∇ = Brochure
⊕ = Supplement or change for TI/QI

SERVICE

Date 30.04.90 VKQPI

Copyright by Dr. Ing. h. c. F. Porsche Aktiengesellschaft

Survey of Information Published in Technical Manual beginning in 1985

6 Cyl. 9

	TI/QI		No.	911 C2/C4	911		911 Turbo	Remarks, Model, Also refer to...	Date
1985									
– Radio Interference	Q	♦	1/85		●		●	Remedy	10.04.85
– Radio Interference	Q	⊕	1/85		●		●	Remedy	07.06.85
– Capacitor Discharge Ignition System	Q	♦	2/85				●	14-pin plug	22.10.85
1986									
– DME Wire Harness	Q		1/86		●			MP XII on intake pipe	16.01.86
– Radio Turning On Noise	Q		2/86		●		●	...QI-1/85	09.05.86
– Service Installation of Windshield Antenna	T	♦	1/86		●		●		27.06.86
– Radio Interference	Q		3/86		●		●	...QI-1/85	13.08.86
– Rear Window Wiper Rear Window Wiper Motor	Q		4/86		●		●	Condensation water	13.08.86
1987									
– Radio Burglar Proof/Coding	Q		1/87		●		●	Code 1111	31.03.87
– Complaint Reports Car Electrical System	Q		2/87		●		●	Damage analysis	31.03.87
– Radio/Serial Number Label	Q		3/87		●		●	Label	22.05.87
– Provisions for Lead Sealing Odometers in Leasing Cars	T		1/87		●		●		27.07.87
– Speedometer Pulse Sender	Q		4/87		●			1987 Model/faulty	18.06.87
1988									
– C-Network Telephone Radio Reception	Q		1/88		●		●	Disconnecting windshield antenna	22.03.88
– Radio Interference	Q		2/88		●		●	Ground point for radio or booster	22.03.88
1989									
– Modified Routing of Wire Harness to Alarm Control Unit	T	♦	1/89	●				WK 01 66000	08.06.89
– New Relays and Fuse of Blowers	T	♦	2/89	●				WK 05 66000	08.06.89
– Burglar Alarm (Disturbed Function, Discharged Battery)	T		3/89	●				Engine and luggage compartment light, radio contact.	16.10.89
1990									

♦ = Conversion instructions or workshop campaign
∇ = Brochure
⊕ = Supplement or change for TI/QI

SERVICE

Date 30.04.90 VKQPI

Copyright by Dr. Ing. h. c. F. Porsche Aktiengesellschaft

Survey of Information Published in Technical Manual beginning in 1985

6 Cyl. 9

	TI/QI		No.	911 C2-C4	911		911 turbo	Remarks, Model, Also refer to...	Date
1990									
– Electrical circuit diagram 911 Carrera	T		1/90		●			M'88 and '89 Amendment to circuit diagram	18.05.90
– Faulty operation of central warning lamp	T		2/90	●				M'90 (L) Bridge adapter on gong relay base	16.05.90
– Retrofitting of electrical and electronic units and systems	T		3/90	●	●		●	Problems/damage in electrical system.	30.05.90
– Modified fuses in Central Electrical System	T		4/90	●				Fuses no. 2, 13, 39 with 30 A capacity.	31.08.90

♦ = Conversion instructions or workshop campaign
∇ = Brochure
⊕ = Supplement or change for TI/QI

Copyright by Dr. Ing. h. c. F. Porsche Aktiengesellschaft

List of Repair Groups Carrera 4

General	Technical Data	Page 0.1
Repair Groups		Group
Volume I	Maintenance, Self-diagnosis	03
	Engine, Crankcase, Suspension	10
Engine, Maintenance	Engine, Crankshaft, Pistons	13
	Engine, Cylinder Head and Valve Drive	15
	Engine, Lubrication	17
	Engine, Cooling	19
	Fuel Supply	20
	Fuel System, Electronic Injection	24
	Exhaust System/Emission Controls	26
	Starter, Power Supply, Cruise Control	27
	Ignition System	28
	Diagnosis	
Volume II	Clutch, Controls	30
	Clutch	32
Transmission (manual)	Manual Transmission, Controls, Case	34
	Manual Transmission, Gears, Shafts	35
	Differential, Transaxle System, All-Wheel Drive	39
	Diagnosis	
	Clutch, Controls	30
Volume III	Torque Converter	32
	Automatic Transmission, Controls, Case	37
Transmission (automatic)	Automatic Transmission, Gears, Shafts	38
	Differential, Transaxle System	39
	Diagnosis	
Volume IV	Front Wheel Suspension	40
	Rear Wheel Suspension, Axle Shaft	42
Chassis	Wheels, Tires, Alignment	44
	Antiblock System	45
	Brakes, Mechanical	46
	Brakes, Hydraulics, Regulator, Booster	47
	Steering	48
	Diagnosis	
Volume VI	Body-Front Section	50
	Body-Center Section	51
Body	Body-Rear Section	53
	Lids	55
	Doors	57
	Electric Sunroof	60
	Hardtop	61
	Bumpers	63
	Glasses, Window Control	64
	Exterior Equipment	66
	Interior Equipment	68
	Seats	72
	Seat Covers	74
Volume VI	Heater	80
	Ventilation	85
Heating, Ventilation, Air Condition	Air Conditioner	87
	Diagnosis	
Electrics	Instruments, Fuel Gauge, Alarm System	90
	Radio, Telephone, On-board-computer	91
	Windshield Wipers and Washer	92
	Exterior Lights, Lamps, Switches	94
	Interior Lights	96
	Diagnosis	
Volume VII	Wiring	97
Electrics Wiring Diagrams		

Printed in Germany, 1988

The workshop manual of the Carrera 4 also includes that for the Carrera 2.
The Carrera 4 acts as the basis for description of the repairs in the manual.
"Carrera 4" also appears on every page in the header line.

Deviating descriptions for repairs on the Carrera 2 follow those of the Carrera 4. These repair descriptions for both models are separated by a yellow sheet.
"Carrera 2" appears on all pages in the header line after the separating sheet. The page number starts with 100 as an additional distinction.

Page

Air-conditioning system

Technical data . . . . . 87 - 01
Removing and installing components of the heating/air-conditioning system . . . . . 87 - 1
Dismantling and assembling the heating/air-conditioning unit . . . . . 87 - 3
Flap adjustment on the heating/air-conditioning unit . . . . . 87 - 9
Checking the refrigerating capacity . . . . . 87 - 11
Removing and installing heating fan motors with built-in heating/air-conditioning unit . . 87 - 13
Safety regulations for handling the refrigerant R 12 . . . . . 87 - 17
Installation work on the air-conditioning system . . . . . 87 - 18
Modifying wiring loom of heater A/C unit . . . . . 87 - 27
Technical data as of Model '93 . . . . . 87 - 29
Pressure and temperature specifications . . . . . 87 - 31
Diagnosis / Troubleshooting . . . . . D 80/87 - 1

Instruments, fuel gauge, alarm system

Acceleration sensors for longitudinal and transverse locks . . . . . 90 - 1
Checking fuel tank sender unit . . . . . 90 - 3

Radio, telephone, on-board computer

Telephone preparation kits M 612 and M 195 . . . . . 91 - 1
Retrofitting of a telephone set . . . . . 91 - 7
Retrofitting of a CD changer . . . . . 91 - 13

Windshield wipers and washer

Removing and installing the wiper motor . . . . . 92 - 1

Diagnosis

Diagnosis / troubleshooting alarm system . . . . . D90 - 1

Printed in Germany – XX, 1993

Technical Data for Air Conditioner

Refrigerant volume	930 grams of Frigen R 12
Refrigerant in compressor	100 ± 20 cc of Densoil

Tightening Torque for Refrigerant Pipes

Outside Thread Dia.	Pitch/Inch	Torque in Nm (Ft. Lbs.)
5/8"	18 UNF	17 ± 3 (12 ± 2)
3/4"	16 UNF	24 ± 4 (17 ± 3)
7/8"	14 UNF	33 ± 4 (24 ± 3)

Hex. Head Bolts on	Threads	Torque in Nm (Ft. Lbs.)
Expansion valve	M 5	6 (4.3)
Expansion valve	M 6	9 (6.5)
Compressor	M 8	28 (20)

Printed in Germany – XVI, 1992

Removing and Installing Heater/Air Conditioner

1. Disconnect battery ground lead.

2. Remove tank (see page 20 - 3).

3. Remove upper cover of heater/air conditioner (two screws with washers).

4. Disconnect central electric.

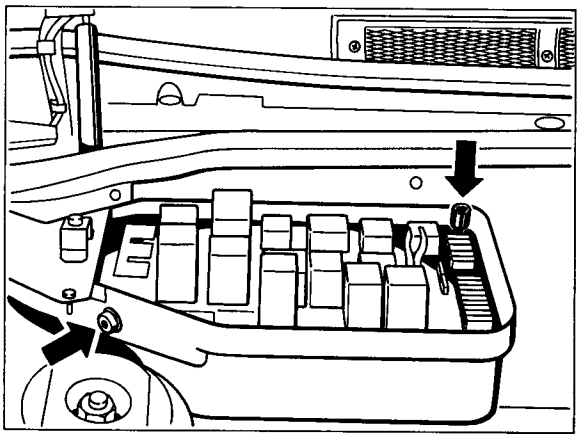

240-87

5. Remove wire harness cover.

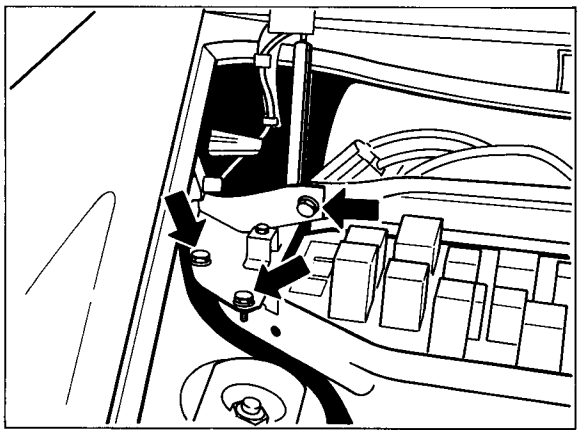

241-87

6. Lay central electric aside on a fender (use fender guard).

7. Pull off electric lead plug on blower final stage.

8. Remove firewall.

9. Remove fresh air inlet grill.

10. Unscrew mounting bolts.

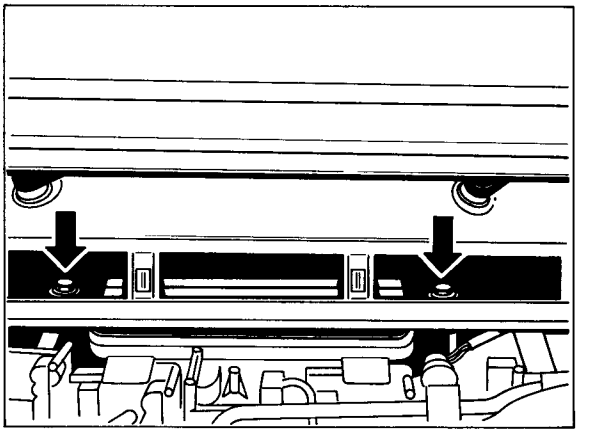

242-87

11. Disconnect plug T 34 (on heater/air conditioner at right top).

Printed in Germany – III, 1989

12. Pull off condensation and rain water drain hoses (cut off straps) and press out molded rubber grommets upward.

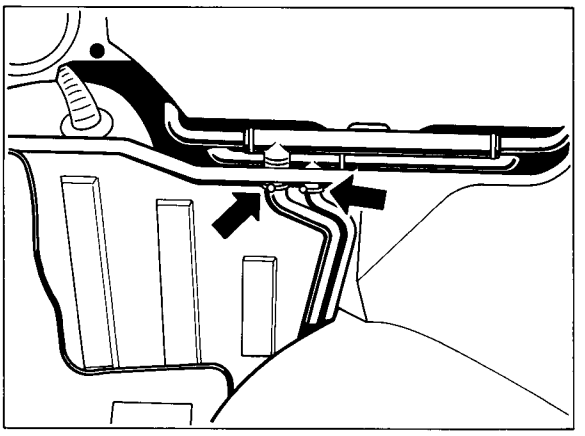

243-87

13. Discharge the air conditioner (draw off refrigerant with a recycling machine),

14. Unscrew refrigerant pipes on expansion valve.

15. Disconnect Frigen switch plug.

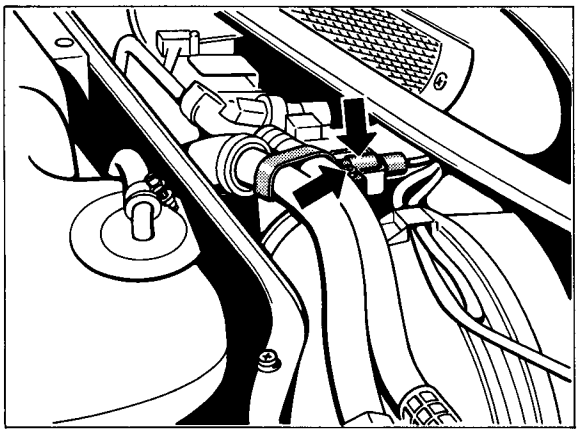

255-87

16. Unscrew holder for refrigerant pipes.

17. Pull off air guides to the side nozzles.

Note

When installing, insert the right air guide prior to complete installation of the heater/air conditioner (better accessibility). The left air guide can be inserted with an installed heater/air conditioner after removal of the large instrument cluster dial.

18. Remove radio.

19. Remove heater/air conditioner controls.

20. Pull off left and right warm air guide necks.

21. Disconnect wire harness no. 180 (is fastened on the passenger compartment wire harness).

22. Disconnect plug T 5 (underneath dashboard).

23. Unscrew mounting screws and nuts.

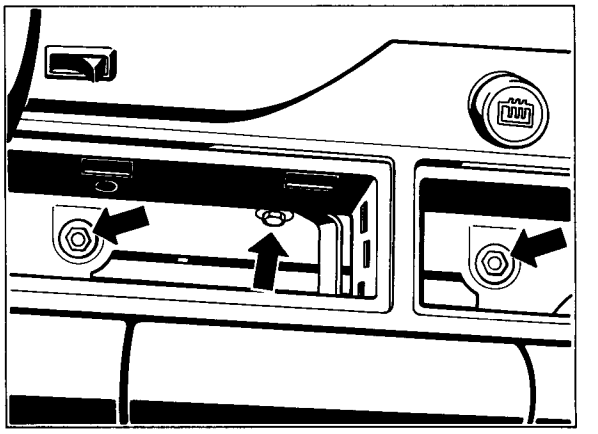

250-87

Printed in Germany – III, 1989

Disassembling and Assembling Heater/Air Conditioner

Printed in Germany – III, 1989

Disassembling and Assembling Heater/Air Conditioner

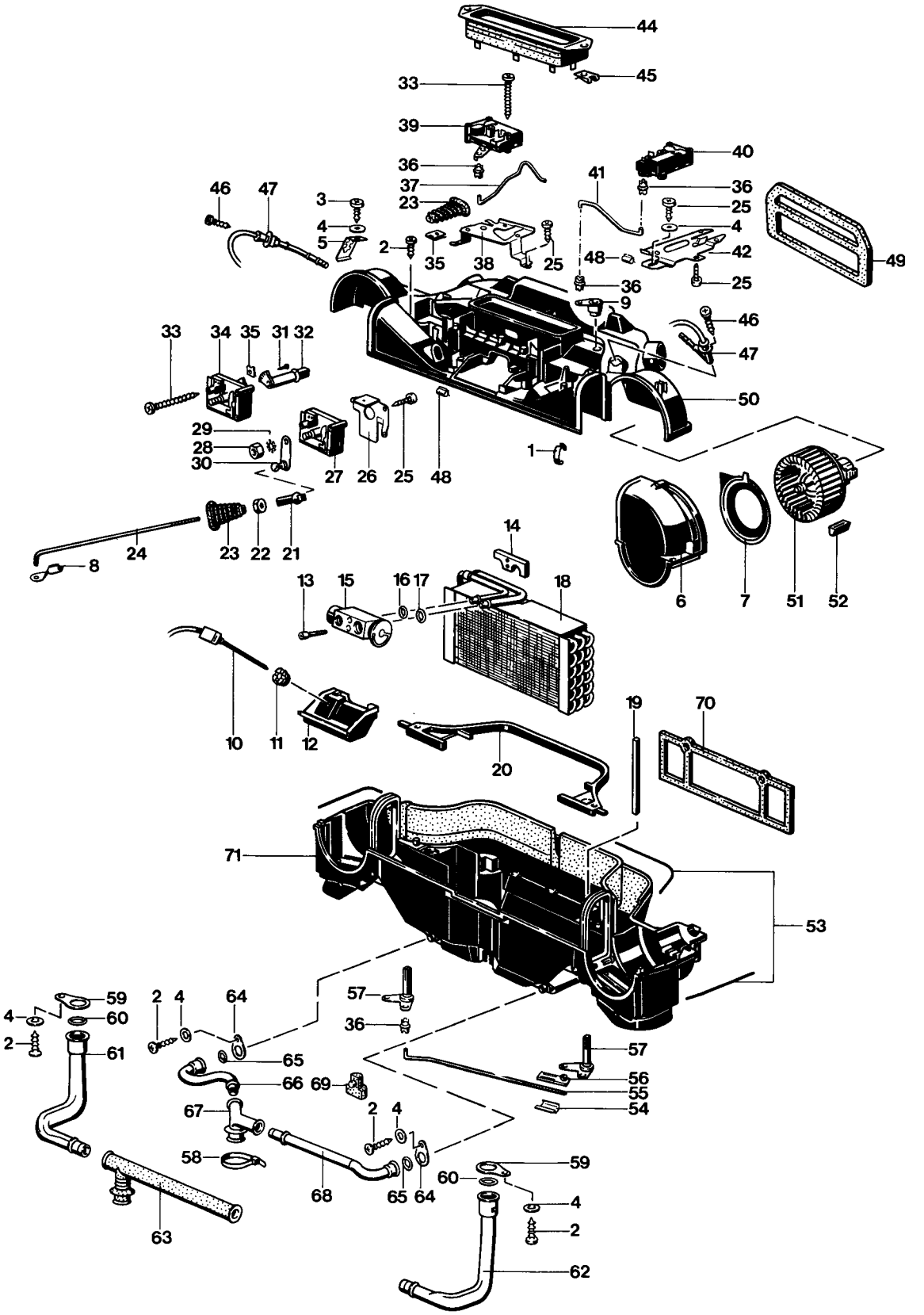

Printed in Germany – III, 1989

No.	Description	Qty.	Note When: Removing	Installing
1	Tension spring	32		
2	Screw	11		
3	Screw	9		
4	Washer	6		
5	Holder	1		
6	Housing cover, left	1		
-	Housing cover, right	1		
7	Liner, left	1		
-	Liner, right	1		
8	Retainer	2		
9	Lever	1		
10	Evaporator temp. sensor	1	Integrated in wire harness	Integrated in wire harness
11	Grommet	1		
12	Cover			
13	Hexagon socket head screw M 5	2		
14	Holding plate	1		
15	Expansion valve	1		
16	Gasket	1		Replace. Coat with refrigerating oil
17	Gasket	1		
18	Evaporator	1	Don't damage fins	Don't damage fins
19	Connecting rod	1		
20	Gasket	1		
21	Ball socket	2		
22	Nut M 5	2		
23	Dust cover	3		

Printed in Germany – III, 1989

No.	Description	Qty.	Note When: Removing	Installing
24	Linkage	2		
25	Screw	7		
26	Holder	2		
27	Motor for temperature mixing flaps	2		Adjust–see page 87 - 9
28	Nut M 5	2		
29	Circlip	2		
30	Lever	2		
31	Screw	1		
32	Joint	1		
33	Screw	4		
34	Motor for defrost or center nozzle	1		Adjust–see page 87 - 9
35	Self-tapping nut	4		
36	Linkage clip	5		
37	Linkage	1		
38	Holder	1		
39	Motor for fresh air flap	1		
40	Motor for footwell flaps	1		Adjust–see page 87 - 10
41	Linkage	1		
42	Holder	1		
43	Clamp	3		
44	Sheet metal frame with rubber cover	1		
45	Self-tapping nut	2		
46	Screw	2		
47	Mixing chamber temperature sensor	2	Integrated in wire harness	Integrated in wire harness
48	Clamp	2		

Printed in Germany – III, 1989

No.	Description	Qty.	Note When: Removing	Installing
49	Gasket	1		
50	Upper housing section	1		
51	Blower, left	1		White plastic
-	Blower, right	1		Black plastic
52	Rubber mount	8		
53	Sealing cord	1		
54	Clampr	1		
55	Linkage	1		
56	Lever	1		
57	Drive	2		
58	Strap	2		
59	Holder	2		
60	Seal	2		
61	Water drain pipe	1		
62	Water drain pipe	1		
63	Connector	1		
64	Holder	2		
65	Seal	2		
66	Water drain pipe	1		
67	Connector	1		
68	Water drain pipe	1		
69	Rubber mount	1		
70	Gasket	1		
71	Lower housing section	1		

Printed in Germany – III, 1989

Removing and Installing Heater/Air Conditioner Regulator

Note

Special Tool V 160 (which is also the order number) is required for removal of the heater / air conditioner reagulator.
Supplier: Matra Werke GmbH
Dieselstr. 30-40
D-6000 Frankfurt 11

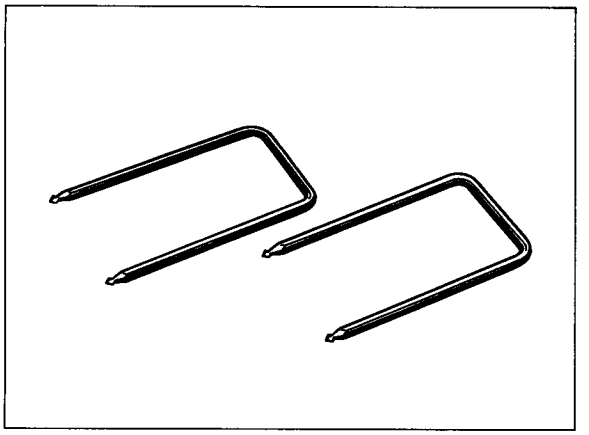

254-87

1. Slide special tool into the openings provided on the heater/air conditioner regulator until it engages.

2. Press out heater/air conditioner regulator toward rear by hand from underneath.

3. Disconnect 25-pin and 35-pin plugs.

Printed in Germany – III, 1989

Adjusting Flaps on Heater/Air Conditioner

Adjusting Defrost/Center Nozzle Flap

1. Run motor to "defrost nozzle closed" final position by supplying 12 volts to pin 4 (positive) and pin 5 (negative) via two electric leads until the motor is in final position.

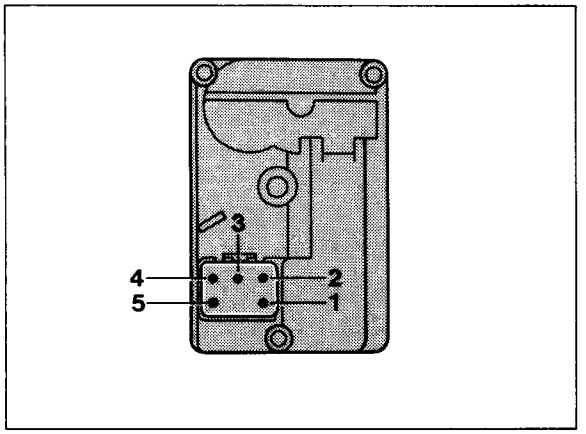

256-87

2. Press defrost/center nozzle flap to "defrost nozzle closed" position (upper outlet closed).

3. Connect drive of motor on joint of flap and secure.

Adjusting Right Temperature Mixing Flap

1. Run motor to "max. cold" final position by supplying 12 volts to pin 4 (negative) and pin 5 (positive) via two electric leads until the motor is in final position.

2. Press temperature mixing flap to "max. cold" position. Linkage and lever must be in a straight line.

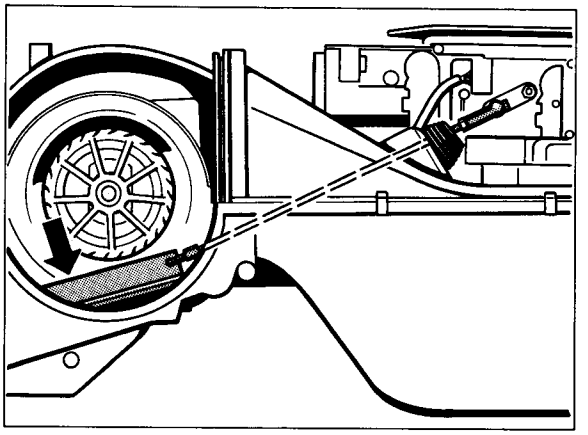

257-87

3. Correct deviation in length by turning the ball socket on the linkage.

Adjusting Left Temperature Mixing Flap

1. Run motor to "max. cold" final position by supplying 12 volts to pin 4 (positive) and pin 5 (negative) via two electric leads until the motor is in final position.

2. Press temperature mixing flap to "max. cold" position. Linkage and lever must be in a straight line.

3. Correct deviation in length by turning the ball socket on the linkage.

Printed in Germany – III, 1989

Adjusting Footwell Flaps

1. Run motor to "footwell flaps closed" final position by supplying 12 volts to pin 4 (negative) and pin 5 (positive) via two electric leads until the motor is in final position. Lever of drive faces in direction of fresh air inlet.

2. Move both footwell flaps into closed position. Engage linkage on the lever and secure with a clamp.

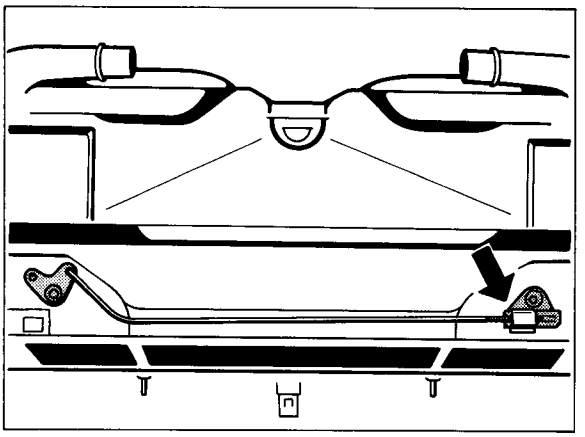

258-87

Printed in Germany – III, 1989

Checking Refrigerating Capacity

Testing Conditions

- Park car where it is not subjected to sunshine.
- Clean the condenser.
- Close sun roof, doors and windows.
- Turn temperature control switch to "max. cold" final position (blue dot on scale).
- Slide defrost lever and footwell lever against the right stops (opened).
- Switch on blower to speed 4.
- Open all dashboard air outlets.
- Measure ambient temperature (outside of car).

Connect service tester on the air conditioner.

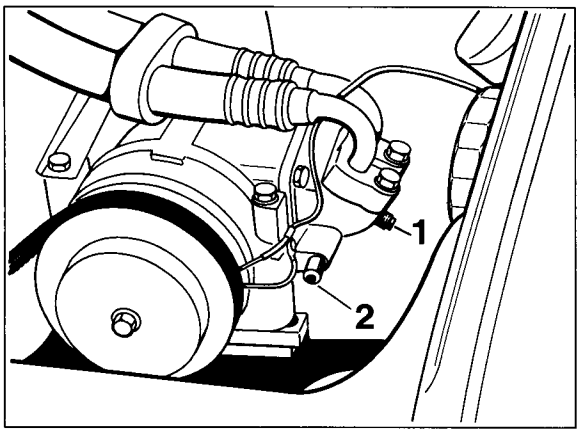

239-87

1 - High pressure
2 - Low pressure

Testing

1. Insert a thermometer (as recommended in the workshop manual) in the center nozzle outlet.
2. Start and run engine at speed of 2,000 rpm.
3. Switch on air conditioner.
4. Read the values for temperature on the center nozzle as well as high and low pressure with the compressor running after two minutes.

Values must be located in the shaded area of the following diagrams (read values in the diagrams according to the ambient temperature).

4.1 Temperature on center nozzle

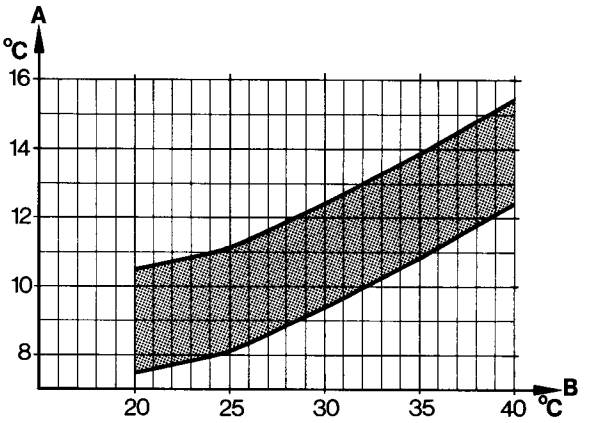

253-87

A - Center nozzle temperature

B - Ambient temperature

Printed in Germany – XI, 1991

4.2 Low pressure

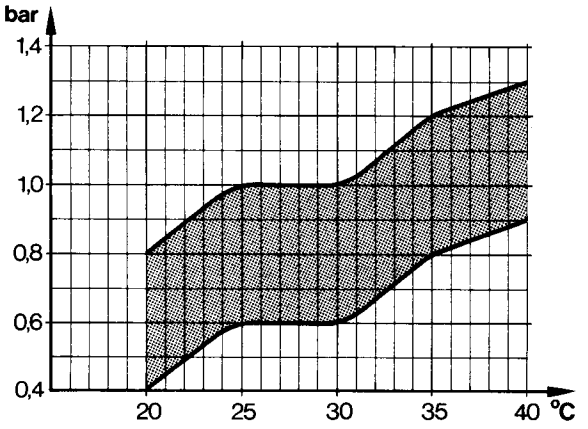

252-87

4.3 High pressure

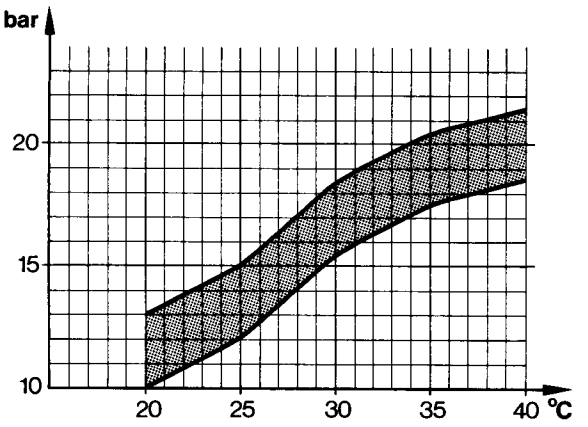

251-87

Check the following if specified values are not reached.

1. The temperature mixing flaps must be completely closed (warm air necks or sills must not be warm). Adjust if necessary.

2. The condenser fan must switch to second speed with a refrigerant high pressure of approx. 19 bar (270 psi).

Printed in Germany – XI, 1991

Removing and Installing Heater Blower Motors of Installed Heater/Air Conditioner

Tools

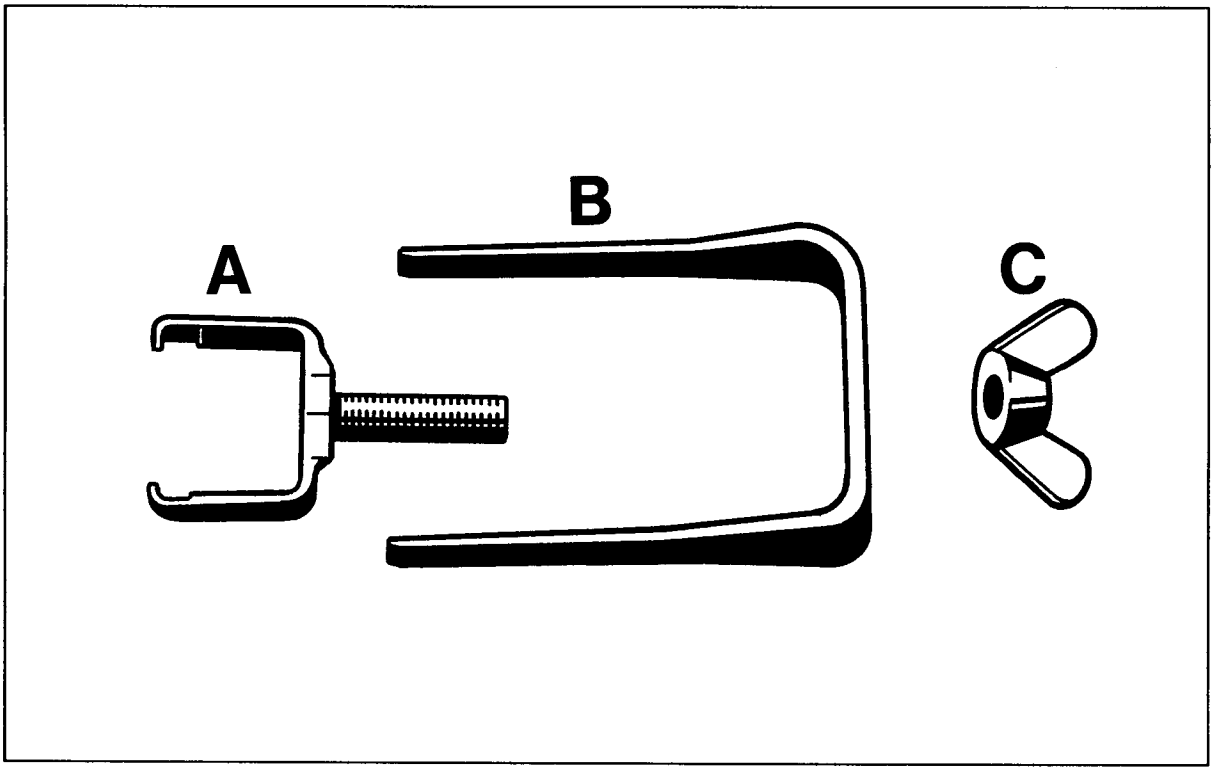

264-87

No.	Description	Special Tool	Order Number	Remarks
	Puller	9512	000.721.951.20	Three-piece

Printed in Germany – III, 1989

Removing and Installing Heater Blower Motors of Installed Heater/Air Conditioner

1. Disconnect battery ground lead.

2. Remove cover of heater/air conditioner (2 screws with washers).

3. Disconnect central electrics.

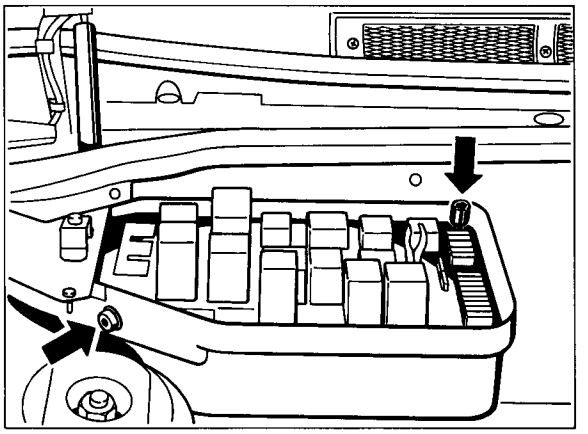

240-87

4. Remove wire harness cover.

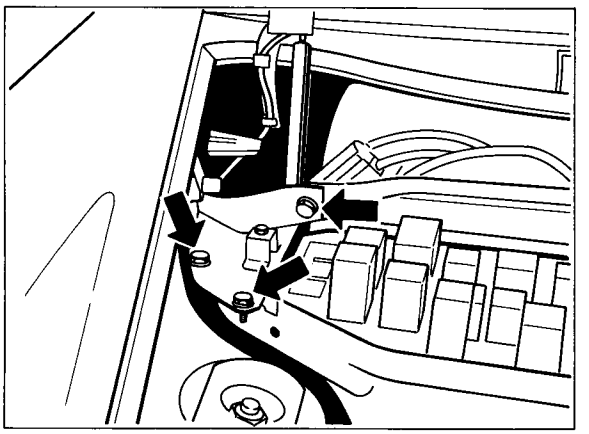

241-87

5. Lay central eletrics aside on the fender (use a fender guard).

6. Pull off electric lead plug on blower final stage.

7. Remove firewall.

Right Blower

8. Disconnect plug T 34 and take plug out of holder.

9. Remove clamps of motor cover and take off cover from above.

10. Mount part A of Special Tool 9512 on the shaft and turn clockwise. Make sure that openings in blower wheel are aligned with openings in housing.

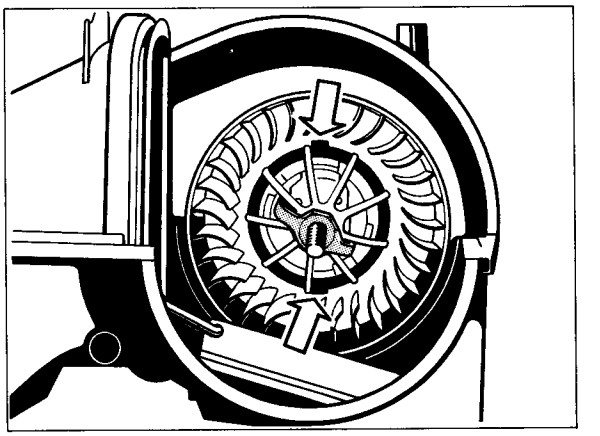

265 - 87

Printed in Germany – III, 1989

Note

Observe installation position of part A of Special Tool 9512. Bore of fan wheel shaft is off-center (2 mm).

11. Slide part B into openings.

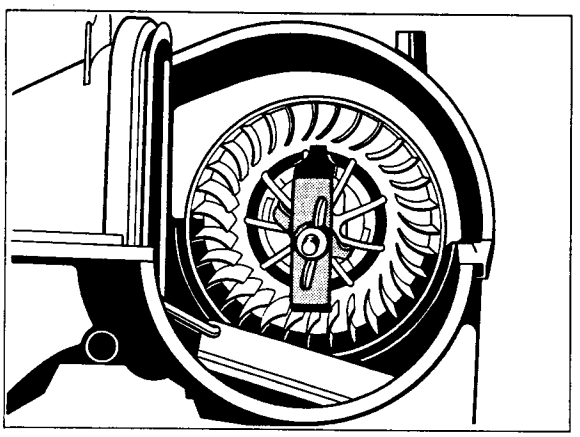

266-87

12. Tighten wing screw (part C) until the blower motor disengages.

13. Pull off connecting leads.

Left Blower

14. Unscrew expansion tank on tank.

15. Unscrew refrigerating pipes in cars with an air conditioner.

16. Remaining procedures are the same as those described in points 9 through 13.

Note

When installing, make sure that the blower motor engages correctly and connecting leads are not pinched.

Check whether the blower wheel can be turned easily.

Safety regulations for handling the refrigerant R12

The refrigerant used R12 is known as a safety refrigerant. In other words, this refrigerant is non- combustible, non-explosive, non-toxic, non-irritating, odorless and tasteless. Nevertheless, you should observe the following points:

1. All contact with liquid or gaseous refrigerant must be avoided. Affected areas of the skin must be treated like frostbite; wash off immediately with cold water and then consult a physician. Protective goggles must be worn to protect the eyes. If refrigerant nevertheless enters the eyes, consult a physician immediately. Rubber gloves must be worn to protect the hands.

2. When performing repairs on the air-conditioning system, all refrigerant nust be extracted from the system and the refrigerant cleaned. Refrigerant must not be allowed to escape into the environment, because it attacks the ozone layer of the earth.

3. Welding must not be performed on parts of the closed air-conditioning system or in its close proximity under any circumstances. Irrespective of whether the system is filled with refrigerant or not, a very high pressure is produced by heating up which may lead to damage to the system or even to an explosion. R 12 is completely non-toxic at normal temperatures, but decomposes into hydrogen chloride and hydrogen fluoride after contact with a flame or at high temperature. These decomposition products contain, among other things, chlorine and phosgene. Since these products are injurious to health, corresponding care must be taken.

4. Refrigerant bottles must not be thrown and must not be exposed to direct sun or other sources of heat for long periods. The maximum permitted temperature of a filled refrigerant bottle must not exceed 45 °C.

Printed in Germany – V, 1989

Installation work on the air-conditioning system

Service unit SECU

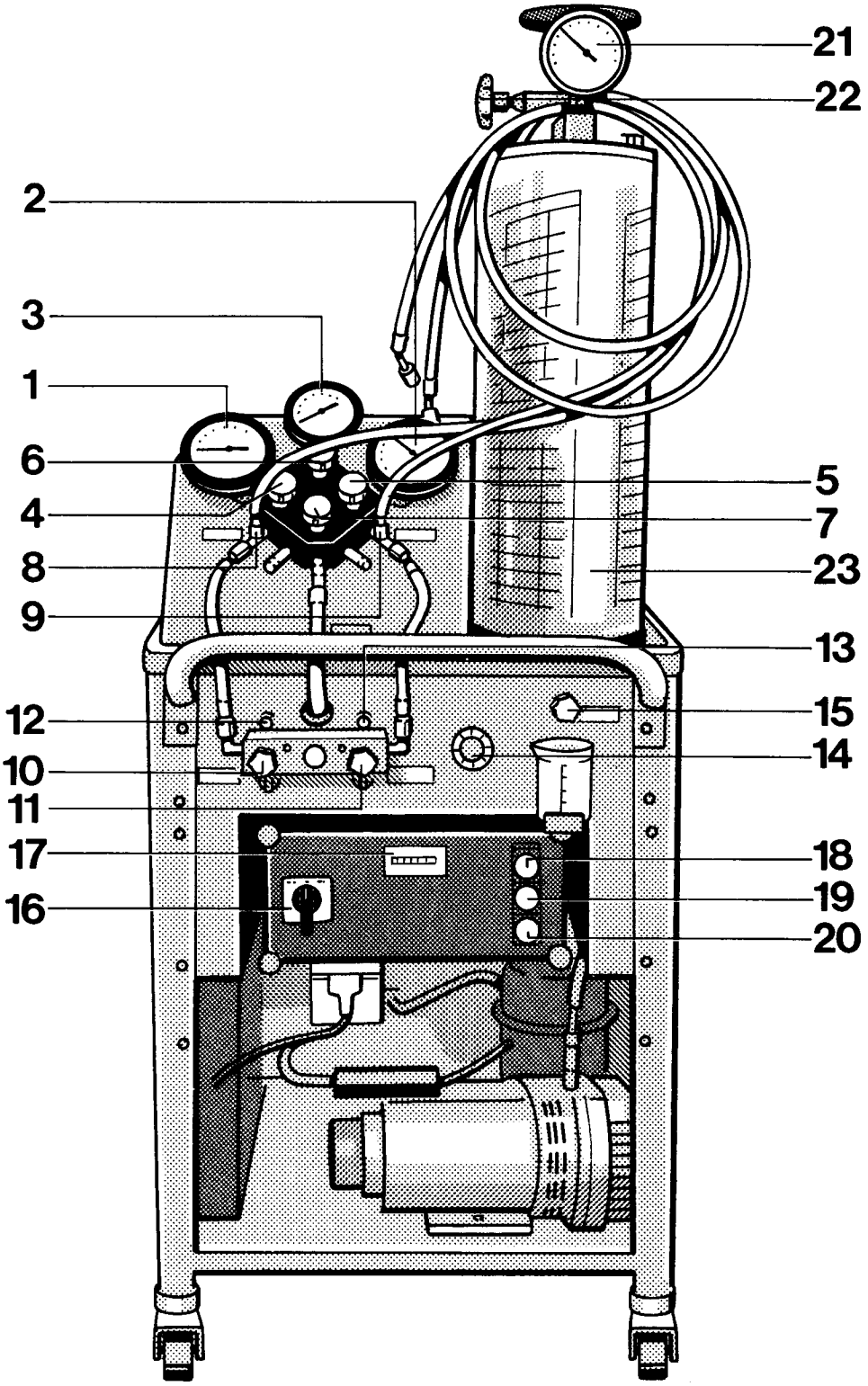

Printed in Germany – V, 1989

1 - Pressure gauge, low pressure

2 - Pressure, high pressure

3 - Torr meter

4 - Shut-off valve, low pressure (blue)

5 - Shut-off valve, high pressure (red)

6 - Shut-off valve, tormeter (black)

7 - Shut-off valve, vacuum pump (yellow)

8 - Connection piece, low pressure

9 - Connection piece, high pressure

10 - Shut-off valve, refrigerant inlet

11 - Shut-off valve, refrigerant outlet

12 - Connection piece, refrigerant inlet (from refrigerant bottle)

13 - Connection piece, refrigerant outlet (to refrigerant bottle)

14 - Moisture indicator

15 - Drain valve, refrigerating oil

16 - Main switch

17 - Operating hours counter

18 - Pilot lamp, yellow

19 - Pilot lamp, red

20 - Pilot lamp, green

21 - Pressure gauge, filling cylinder

22 - Shut-off valve, filling cylinder

23 - Filling cylinder with weight scale

Printed in Germany – V, 1989

Installation work with intervention in the refrigerant system

The content of the refrigerant system must be properly disposed of before all work on the air-conditioning system which necessitates opening of the refrigerant system. The safety regulations must be observed here.

Dirt and moisture must be kept away from the piping system of the air-conditioning system. For this reason, extreme cleanliness must be ensured during all work. No parts of the system must be cleaned internally with hot steam under any circumstances. Only nitrogen must be used for cleaning.

When a component is replaced, all openings must be sealed with suitable stoppers.

General work sequence

1. Extract refrigerant.
2. Remove faulty part.
3. Evacuate.
4. Check system for leaks.
5. Flush with refrigerant.
6. Perform extraction again.
7. Evacuate.
8. Fill.

Note

Pay attention to the sealing rings when disconnecting or connecting the hose connections.

Printed in Germany – V, 1989

Refrigerant extraction

1. Connect service unit to the system.

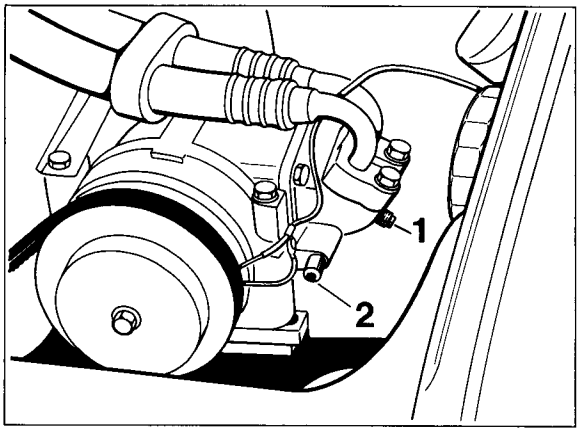

239 - 87

1 - High pressure
2 - Low pressure

Note

Check at the liquid reservoir whether the sight glass is still transparent. If the sight glass shows signs of brown discoloration on the inside, the refrigerant should be pre-filtered by means of a cleaning drier installed in-between in the extraction hose. In this case, extract only via the high-pressure side.

2. Open the shut-off valve, low pressure (4), shut-off valve, high pressure (5) and shut-off valve, refrigerant inlet (8).

3. Turn the main switch (16) fully to the right. The green pilot lamp lights up.

Note

Extraction takes place automatically. The unit is switched off when all refrigerant has been extracted from the circuit. The red pilot lamp then lights up.

4. Close shut-off valves 4, 5 and 8.

5. Open the refrigerating oil drain cock (15) and drain extracted refrigerating oil.

6. Determine the volume of the refrigerating oil.

Note

No longer use extracted refrigerating oil.

7. Fill system with new refrigerating oil (extracted volume + 10 cm^3)

Filling refrigerating oil

1. Unscrew the red hose on the service unit at connection piece 9 and hold in the container with new refrigerating oil.

2. Switch on vacuum pump.

3. Open shut-off valve for low pressure (4) and vacuum pump (7).

Note

The refrigerating oil is now sucked into the system via the high-pressure side.

4. After filling the refrigerating oil, close the shut-off valves and switch off the vacuum pump.

Printed in Germany – V, 1989

Evacuating the air-conditioning system

1. Extract any pressure still present.

2. Switch on vacuum pump (turn main switch to left).

3. Open shut-off valves for low pressure (4), high pressure (5), torr meter (6) and vacuum pump (7).

4. Leave vacuum pump switched on for at least 15 minutes.

5. Close shut-off valves 6 and 7 at a pressure of approx. 0.1 bar (absolute).

6. Switch off vacuum pump.

Note

If the vacuum cannot be attained or can be reached only after a very long time or if the pressure increases over 0.2 bar (absolute) approx. 10 minutes after the pump is switched off, there is a leak in the circuit and this must be sealed.

Flushing the air-conditioning system

Note

Flushing the air-conditioning system serves the purpose of drying the circuit.

1. Evacuate.

2. Open the shut-off valve for high pressure (5) and the refrigerant outlet (11).

3. Allow refrigerant to flow in until a pressure of approx. 2 bar (absolute) is indicated.

4. Close shut-off valves 5 and 11.

5. Extract refrigerant again.

6. Evacuate.

Printed in Germany – V, 1989

Filling the air-conditioning system

Note

The air-conditioning system must be evacuated and free of leaks. There must be sufficient refrigerant in the filling cylinder. Top up if necessary.

1. All valves on the service unit must be closed.

2. A pressure of approx. 7 bar is required to fill the system. If the pressure is lower, the pressure can be increased by cleaning the refrigerant (refer to Page 87 - 25). If the pressure is higher than 10 bar (end of the weight scale), the pressure in the filling cylinder can be lowered by opening the shut-off valve 22.

Note

The pressure increases by approx. 1.5 bar in 10 minutes.

3. In accordance with the value read off on the pressure gauge 21, adjust the rotating scale of the filling cylinder so that the value specified at the top edge of the scale is positioned over the sight glass.

Note

It must be noted that the rotating scale is designed for the use of different refrigerants. The refrigerant designations are specified at the bottom scale edge.
Only the scales for R12 are applicable for automobile air-conditioning systems.

4. Set the required refrigerant quantity on the filling cylinder with the rubber ring (difference to refrigerant level in filling cylinder).

5. Open the shut-off valves for high pressure (5) and the refrigerant outlet (11).

6. Observe the fluid level indication in the sight glass of the filling cylinder. When the filling level has reached the setting ring, close shut-off valves 11 and 5.

7. Check the refrigerating capacity (refer to Page 87-11).

8. Disconnect filling hoses at compressor.

9. Screw protective caps onto the valves.

Printed in Germany – V, 1989

Topping up the air-conditioning system

Note

If gas bubbles are visible in the sight glass of the fluid reservoir when the air-conditioning system is switched on, there is not sufficient refrigerant in the system.

1. Extract refrigerant from air-conditioning system.
2. Determine the volume of the refrigerating oil extracted as well.
3. Fill system with new refrigerating oil.
4. Evacuate.
5. Check system for leaks.
6. Fill system with prescribed filling quantity.

Filling service unit with refrigerant

1. Connect refrigerant bottle with the connection piece at the refrigerant inlet (12).
2. Open the valve on the refrigerant bottle and shut-off valve 10.
3. Switch on the service unit with the main switch (16). The green panel lamp lights up.
4. If there is sufficient refrigerant in the service unit, close the bottle valve. The system switches off automatically when the refrigerant is extracted up to the bottle valve.
5. Close the shut-off valve at the refrigerant inlet (10).

Emptying the service unit

Note

If the filling cylinder is full with refrigerant and it is still necessary to extract further refrigerant, the clean refrigerant can be filled into a refrigerant bottle. Pay attention to the maximum filling weight here. **The refrigerant bottle must not be overfilled**.

1. Connect the refrigerant bottle with the connection piece at the refrigerant outlet (13).
2. Increase the pressure in the filling cylinder to approx. 8 bar by cleaning the refrigerant.
3. Open the bottle valve and the shut-off valve at the refrigerant outlet (11).
4. After completing the emptying operation, close the bottle valve and shut-off valve.

Note

Do not completely empty the filling cylinder, otherwise moisture may enter the service unit.

Printed in Germany – V, 1989

Cleaning the refrigerant

Note

If the extracted refrigerant is heavily contaminated, it must be pumped through the filter systems several times.

The state of cleaning can be seen at the moisture indicator (14).

1. Open the shut-off valve for the filling cylinder (22).

2. Switch on the service unit. The green pilot lamp lights up.

3. After cleaning the refrigerant (state visible at the moisture indicator), close the shut-off valve.

Note

The unit switches off automatically when all refrigerant has been pumped into the filling cylinder (red pilot lamp lights up). The pressure then increases in the filling cylinder.

Printed in Germany – V, 1989

Modifying wiring loom of heater A/C unit

Note

On vehicles prior to Model '91, the heater A/C unit wiring loom must be modified if a new heating/air conditioning regulator with index 01 is fitted. A jumper that connects pin 19 of connector G to pin 1 must be fitted.

1. Remove heating/air conditioning regulator (refer to page 87 - 8).

2. Pull connector G (35-pin) apart.

Note

The connector housing consists of 2 sections. With the connector housing clipped together, the connectors are protected additionally (apart from the protection offered by the retaining lug) against being pressed out.

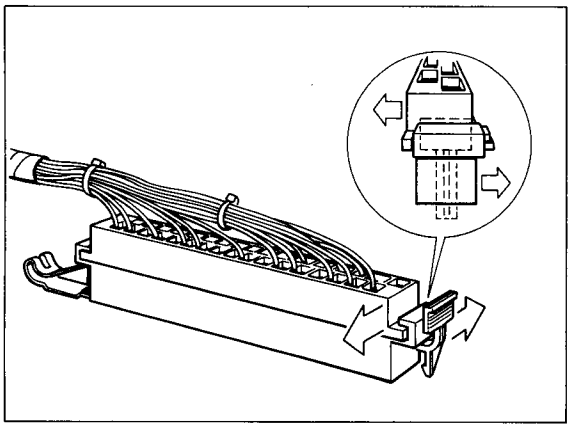

698-87

3. Disengage connector terminal G 19.

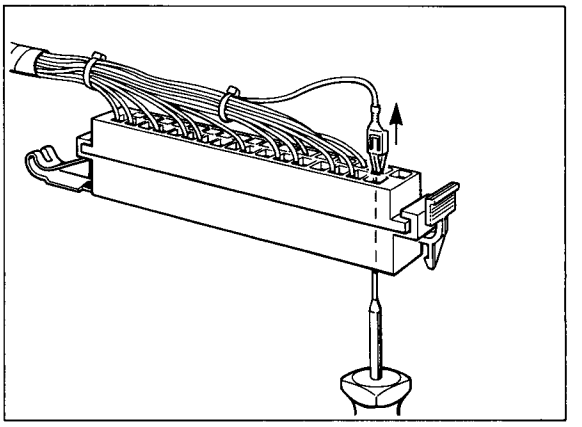

699-87

4. Cut off connector terminal and reconnect along with a second cable – cross-section 0.75 mm^2, length approx. 60 mm.

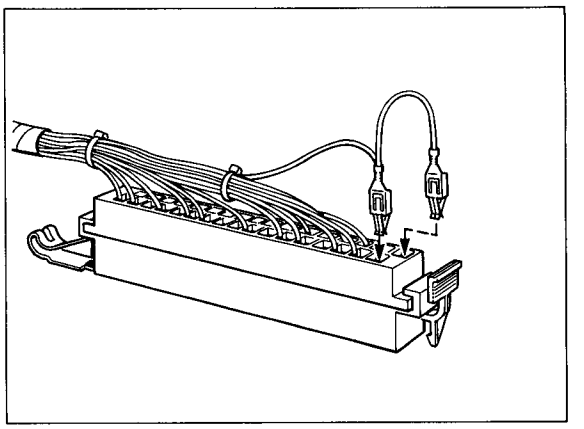

700-87

5. Engage connector terminals into G 19 and G 1.

6. Clip connector housing together.

Note

If the jumper is missing, a fault (Fault Code 46 and 47) on the missing left-hand rear blower is detected and the left-hand heater blower will therefore operate at reduced speed while the heater is on.

Printed in Germany – XIV, 1991

Technical data of air conditioning system

As of MY '93

Refrigerant charge	840 g refrigerant **R 134a**
Refrigerant oil in compressor	140 ± 20 c.c. ND 8

Tightening torques for refrigerant lines

Outside thread dia.	TPI	Tightening torque, Nm (ftlb.)
5/8"	18 UNF	17 ±3 (13 ± 2)
3/4"	16 UNF	24 ±4 (18 ± 3)
7/8"	14 UNF	33 ±4 (24 ± 3)

Hexagon head bolts	Thread	Tightening torque, Nm (ftlb.)
Expansion valve	M 5	6 (4)
Expansion valve	M 6	9 (7)
Compressor	M 8	28 (21)

Note

When fitting the refrigerant lines, coat the fittings and the O-rings lightly with refrigerant oil.

The refrigerant oil has to be **disposed of as hazardous waste.**

Printed in Germany - XXII, 1994

Pressure and temperature specifications

Refrigerant R 134 a

General testing requirements:

– V-belt tensioned correctly.

– Magnetic coupling energized.

– Condenser clean.

– Sunroof, doors and windows closed.

1. Switch on A/C system.

2. Set temperature selector to max. cooling.

3. Set fresh-air blower to stage 4.

The pressures and temperatures indicated in the below diagrams must be reached after a running time of approx. 10 mins. at a speed of 2,000 rpm with the compressor switched on.

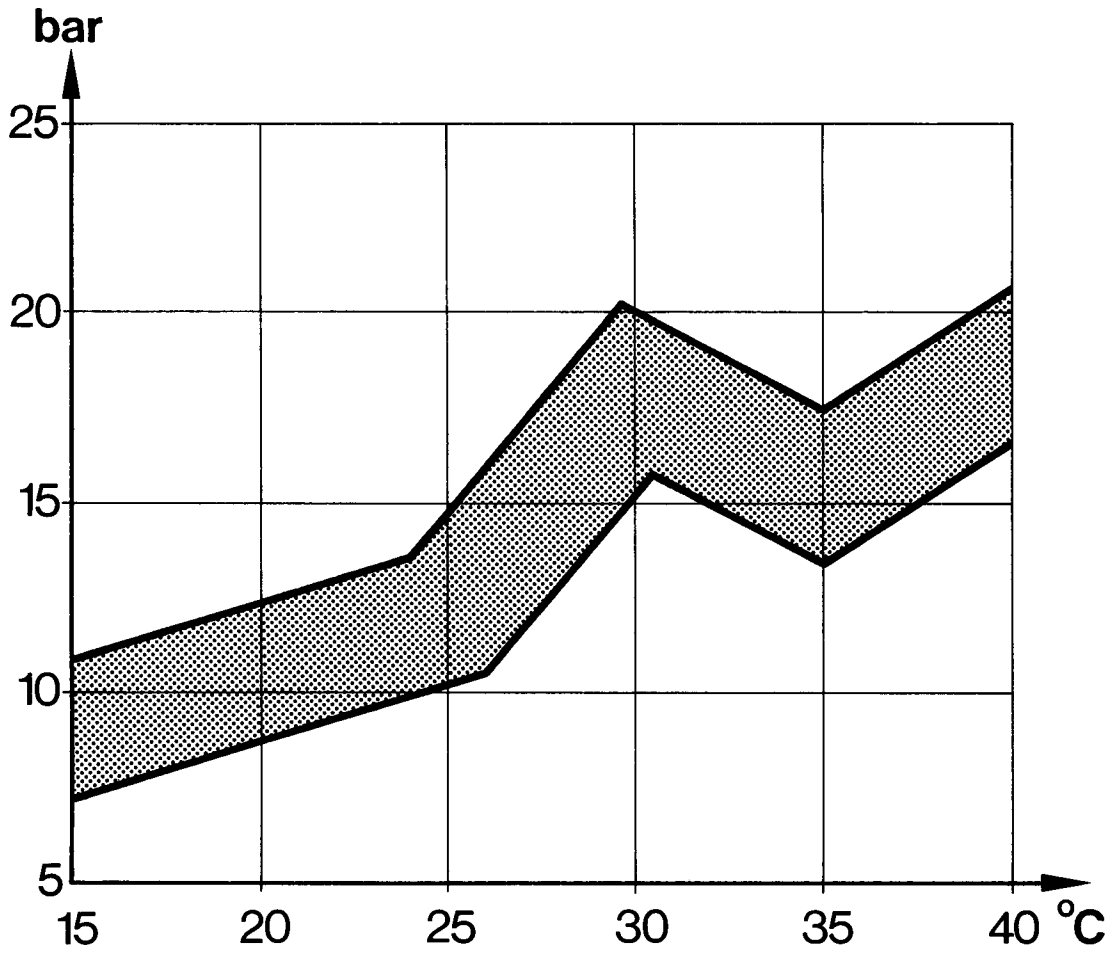

High pressure in refrigerant circuit vs. ambient temperature

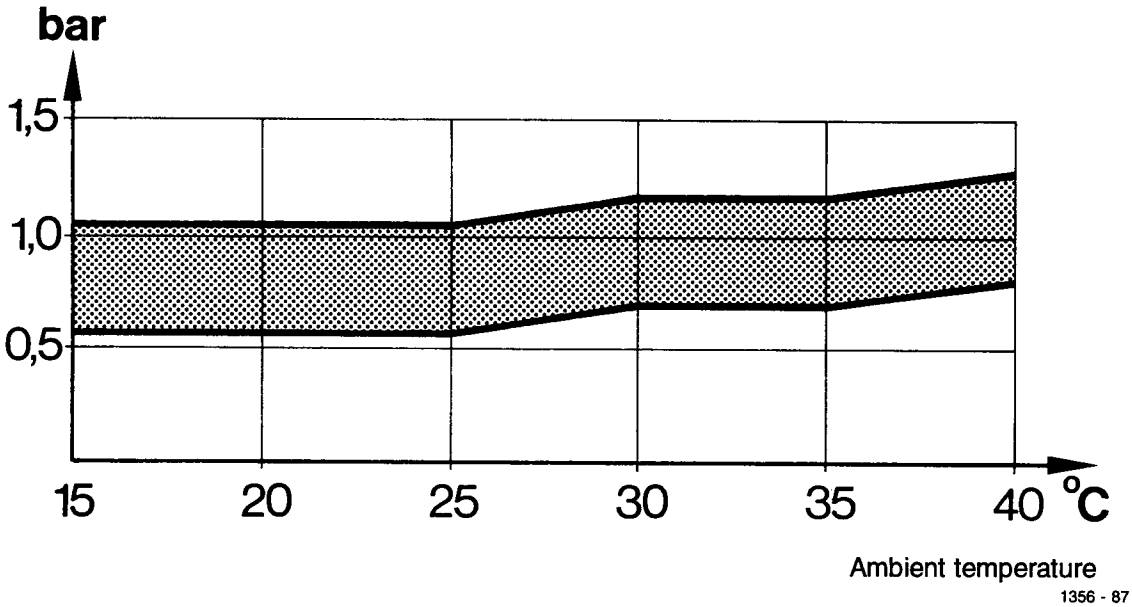

Low pressure in refrigerant circuit vs. ambient temperature

Temperature at center nozzle

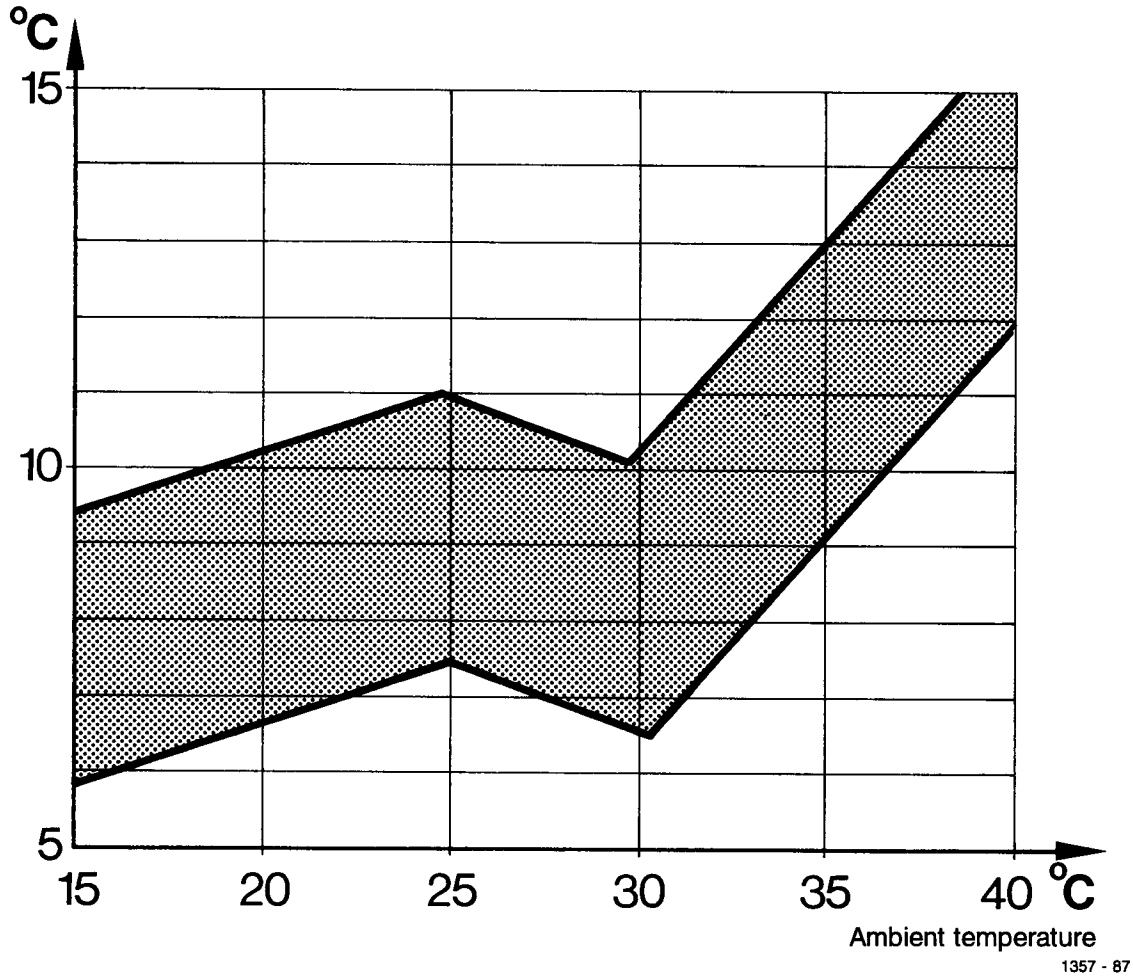

Air temperature at center nozzle vs. ambient temperature

Printed in Germany – XX, 1993

Diagnosis / Troubleshooting

The heater and/or air conditioner can be checked with a 9288 System Tester or 9268 Tester. The 9268 tester is connected in the 19-pin diagnosing socket with help of adapter leads 9268/2 and 9288/1.

Reading Fault Memory

9288 System Tester: see Repair Group 03, Self-diagnosis.

9268 Tester: see information brochure on diagnosing DME, LH-EZK.

Information for 9268 Tester:

The fault memory of the DME control unit must be read first. The fault memory of the heater and/or air conditioner can be read only after 1500 (no faults stored) or 1000 (end of output) is displayed.

If the control lamp for the airbag system indicates a fault, flashing code diagnosis with the 9268 Tester will not be possible. Diagnosing is only possible with a 9288 System Tester.

Explanation of Four Digit Fault Codes:

1st digit: 8 = Heater and/or air conditioner

2nd digit: 1 = Fault existing at moment

2 = Fault not existing at moment

3rd digit, 4th digit } = Fault code

This diagnosing/troubleshooting plan is based on the contents of the fault memory.

Paths not covered by self-diagnosis can be diagnosed with conventional means (Test Point 1 in following Fault List).

Troubleshooting requires that the person testing

- knows the location of components, function and interrelation of the systems being tested (model information),
- is capable of reading and evaluating Porsche wiring diagrams,
- knows the function of circuits and relays, and
- knows how to operate and read testers such as oscilloscope, voltmeter, ohmmeter and ammeter.

Important:

If a faulty component appears in the display of a tester or in the Fault List, the fault does not have to be in the displayed component, but instead could also be in the concerned control unit or connecting leads (paths) between the component and control unit. No troubleshooting may be carried out in the form of disconnecting plugs and so on before reading the fault memory, since this could be stored as a fault in the fault memory.

Printed in Germany – III,1989

Note

Displayed

Fault does not exist, this could mean:

- Fault does not exist at time of testing (loose contact)
  Remedy: Path checked by visual inspection

- Conditions, with which the fault had occured, are not given (e.g. ignition not turned on, AC button not pressed)
  Remedy: Compliance with the conditions displayed in the tester

Signal unplausible:

- The control unit cannot recognize wheter there is a short, break or seizure of an electric motor.

Temperature Sensor Values

Left and Right Mixing Chambers

at: 0°C (32° F)	30.6 - 34.7 kΩ
25°C (77° F)	9.5 - 10.5 kΩ
50°C (122° F)	3.4 - 3.8 kΩ

Evaporator

at: 0° (32° F)	8.8 - 9.2 kΩ
25°C (77° F)	2.6 - 2.9 kΩ

Rear Fan

at 0°C (32°F)	28.8 - 36.4 kΩ
25°C (77°F)	9.0 - 11.0 kΩ
50°C (122° F)	3.1 - 4.0 kΩ

Oil Cooler

at 60°C (140° F)	3.6 - 4.0 kΩ
85°C (185° F)	1.4 - 1.6 kΩ
100°C (212° F)	0.9 - 1.0 kΩ

Criteria for canceling the diagnostic operation

1. Vehicle speed > 0 mph
2. RH mixing chamber temperature > 80°C
3. LH mixing chamber temperature > 80° C
4. Rear fan temperature > 95° C
5. Oil temperature > 105° C

Criteria for starting the diagnostic operation

1. Vehicle speed = 0 mph
2. RH mixing chamber temperature < 80°C
3. LH mixing chamber temperature < 80°C
4. Rear fan temperature < 95° C
5. Oil temperature < 105°C

Fault, Fault Code	Possible Causes, Elimination, Remarks
Test Point 1	
Power supply	**to heater/air conditioner regulator** K1 - term. 31 K2 - term. 30 G29 - term. X G35 - term. 15 G17 - term. 58 b (light) check
Test Point 2	
Inside temperature sensor Fault Code 8 _ 11	Replace heater/air conditioner regulator.
Test Point 3	
Left mixing chamber temperature sensor Fault Code 8 _ 12	Measure resistance between G 18 and G 23. Check both electric leads against ground.
Test Point 4	
Right mixing chamber temperature sensor Fault Code 8 _ 13	Measure resistance between G 18 and G 24. Check both electric leads against ground.
Test Point 5	
Evaporator temperature sensor Fault Code 8 _ 14	Measure resistance between G 18 and G 22. Check both electric leads against ground.
Test Point 6	
Rear fan temperature sensor Fault Code 8 _ 15	Measure resistance between G 10 and G 18. Check both electric leads against ground. Note that the electric leads run via two plugs (T 5 and T 30).

Printed in Germany – III,1989

Fault, Fault Code	Possible Causes, Elimination, Remarks
Test Point 7	
Oil cooler temp. sensor Fault Code 8 _ 21	Measure resistance between G 12 and G 18. Check both electric leads against ground. Note that the electric leads run via plug T 34.
Test Point 8	
Defrost flap motor Fault Code 8 _ 22	1. Check voltage between G 18 (negative) and G 26 (positive). Display: 0.2 - 5 volts depending on position of motor. 2. Check voltage between G 13 (positive) and G 18 (negative). Display: approx. 5 volts. Replace heater/air conditioner regulator if there is no voltage. 3. Pull off plug on drive motor. 4. Check pin 4 and pin 5 electric leads for breaks, short against ground and against battery voltage.
Test Point 9	
Footwell flap motor Fault Code 8 _ 23	1. Check voltage between G 18 (negative) and G 27 (positive). Display: 0.2 - 5 volts. Points 2 through 4 – see Test Point 8.
Test Point 10	
Fresh air flap motor Fault Code 8 _ 24	1. Check voltage between G 18 (negative) and G 20 (positive). Display: 0.2 - 5 volts. Points 2 through 4 – see Test Point 8.
Test Point 11	
Left mixing flap motor Fault Code 8 _ 31	1. Check voltage between G 18 (negative) and G 25 (positive). Display: 0.2 - 5 volts. Points 2 through 4 – see Test Point 8.

Printed in Germany – III,1989

Fault, Fault Code	Possible Causes, Elimination, Remarks
Test Point 12	
Right mixing flap motor Fault Code 8 _ 32	1. Check voltage between G 18 (negative) and G 8 (positive). Display: 0.2 to 5 volts. Points 2 through 4 – see Test Point 8.
Test Point 13	
Left heater blower motor Fault Code 8 _ 33	1. Check whether final stage is screwed tight on the aluminum cooling panel. 2. Check whether motor is seized mechanically.
Test Point 14	
Right heater blower motor Fault Code 8 _ 34	See Test Point 13.
Test Point 15	
Condenser blower motor Fault Code 8 _ 41	1. Check voltage on terminals 30 and 30 C. 2. Check whether motor is seized mechanically; e.g. bridge terminals 30 and 87. 3. Check leads from relay to motor for breaks and ground shorts. 4. Check leads from motor to heater/air conditioner regulator G 7 for breaks.
Test Point 16	
Oil cooler blower motor Fault Code 8 _ 42	Points 1 through 3 – see Test Point 15. 4. Check leads from motor to heater/air conditioner regulator G 9 for breaks.

Printed in Germany – III,1989

Fault, Fault Code	Possible Causes, Elimination, Remarks

Test Point 17

Rear blower motor speed 1
Fault Code 8 _ 43/46

Points 1 through 3 – See Test Point 15.

4. Check electric leads from motor to heater/air conditioner regulator G 19 for breaks.
5. Check electric leads from motor to relay term. 87 or to ballast resistor for short against battery voltage.

Test Point 18

Rear blower motor speed 2
Fault Code 8 _ 44/47

1. Check voltage on terminals 30 and 30 C.
2. Check whether motor is seized mechanically, e.g. bridge terminals 30 and 87.
3. Check electric leads from relay term. 87 to motor for breaks and ground short.
4. Check electric leads from motor to heater/air conditioner regulator G 19 for breaks.

Test Point 19

Inside sensor blower motor
Fault Code 8 _ 45

1. Check voltage on plug receptacle. Display: approx. 12 volts.
2. Check whether motor is seized mechanically.

Note on Test Item 17/18

The turbo is fitted with 2 rear blowers. Fault Codes 43 and 44 refer to the right-hand blower, 46 and 47 refer to the left-hand blower.
Since both the 911 Carrera 2/4 and the 911 turbo are fitted with the same heating/airconditioning blower, a separate jumper is fitted to the 911 Carrera 2/4 (also refer to page 87-27). For this reason, both fault codes, i.e. 43 and 46 or 44 and 47, respectively, are displayed at the same time whenever a fault in the rear blower is detected on the 911 Carrera 2/4.

Printed in Germany – XIV,1991

Heating/air conditioning blower with index 01

Software No.: H 03, H 04
H 03 - Heating regulator
H 04 - Heating and air conditioning regulator

Diagnosis was extended by additional features:

- Drive link activation
- Input signals
- Actual values

The following drive links can now be activated:

- Left mixing flap
- Right mixing flap
- Defroster flap
- Footwell flaps
- Fresh air flaps
- Rear blower
- Left heater blower
- Right heater blower
- Oil cooler blower
- Condenser blower (only H 04)
- Air-conditioning test (only H 04)

Operation of the drive motors for the flaps and the blower motor, respectively, is displayed via a bar graph (except for the heater blowers: in this case, operation is indicated by the operating noise). Incase of the drive motors, it is important for the bar graph display to change, i.e. the flaps must be operated from the open to closed and from the hot to cold positions, respectively, and vice versa.

In case of the air conditioning test, the evaporator temperature must drop below 5°C. If testing is not possible, check operation of the left and right mixing flaps and of the condenser blower.

The following input signals may be checked:

- Footwell flap
- Defroster flap
- Blower potentiometer
- Temperature potentiometer
- Air circulation switch
- Defroster switch
- AC switch (only H0 4)

Operation of the potentiometers is displayed via a bar graph.

Modify position of potentiometers: the bar graph must increase or decrease, respectively.

Operation of the switches is indicated by the opened or closed position;

Switch not actuated: open
Switch actuated: closed

Printed in Germany – XIV,1991

The following actual values may be displayed:

- Voltage Term. X
- Inside temperature
- Rear temperature
- Mixing chamber temperature, left
- Mixing chamber temperature, right
- Oil temperature
- Evaporator temperature (only H 04)

Printed in Germany - XIV,1991

Axial and Lateral Acceleration Sensors

Location

The sensors are installed on a sheet metal console on the tunnel underneath the center console. These sensors are required for all wheel drive and antiblock systems.

1 - Lateral acceleration sensor

2 - Axial acceleration sensor

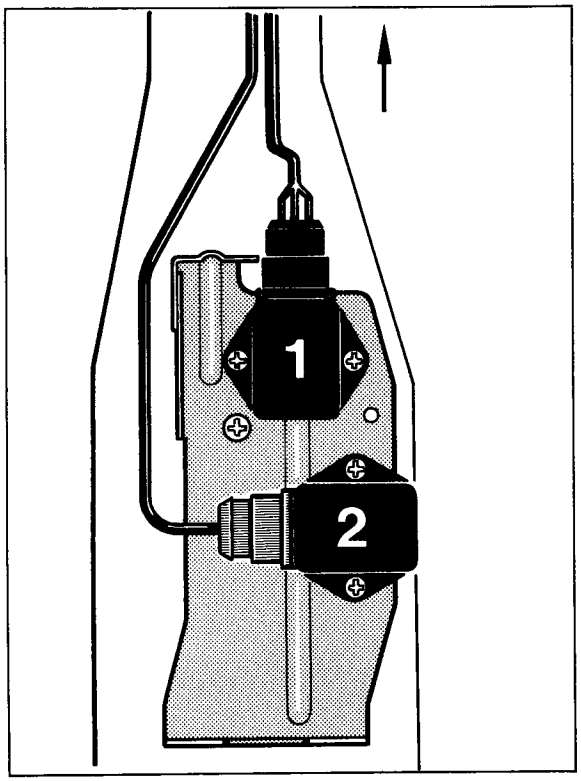

290- 45

Installation

Always conform with the following points when installing:

1. Park car on level ground (level floor).

2. Check levelness of the sheet metal console with a bubble level. Replace a bent sheet metal console.

3. Connecting leads must **not** be mixed up. Plug receptacles have different colors for identification.
   Black plug receptacle for the lateral acceleration sensor.
   Gray plug receptacle for the axial acceleration sensor.

4. Sensors must not be subjected to any type of extreme acceleration such as from throwing, falling or knocking.

5. Sensors must always be inspected after an accident. Sensors must be replaced if they are not within specifications.

Checking

Checking is required to guarantee the following points.

- Correct location (position) of sensors
- Function of sensors
- Electric leads (plugs) connected on the correct sensor (mix-up test)

Testing is described in Rep. Gr. 45 (Volume IV – Chassis).

Printed in Germany – III, 1989

Checking fuel tank sender unit

Visual inspection

1. The fuel tank sender unit must show no signs of mechanical damage.

2. The two flood holes on the bottom of the sender unit must not be obstructed.

Electrical operational check

1. Connect an ohmmeter to the unit connectors.

Note

The length of the measuring leads must not exceed 1 m.

2. Hold sender unit vertically, with the threaded flange pointing up:

Reading: 70.1 Ω to 74.7 Ω

3. Turn sender unit over;
threaded flange points down.
Reading: 1.1 Ω to 2.5 Ω

Note

Turn fuel tank sender unit over rapidly in one go.
The resistance read off immediately after the float has audibly bottomed out is the relevant measuring result.

4. Repeat test steps 2 and 3.

Note

The values read off must remain within the limits for the entire duration of the test; if this is not the case, replace the sender unit.

Printed in Germany – XV, 1992

Telephone preparation kits M 612 and M 195

C2-net telephone system (Philips)
Cellular telephone system (USA only)

As from model 90, the 911 Carrera 2/4 can be equipped with a telephone preparation kit ex-works.

The preparation kit includes all necessary wiring harnesses, the holders for the radio device and the control units as well as the telephone antenna.

Note

Problems may occur during driving operation if the wiring harnesses are not routed as planned in the preparation kit or if telephone systems which are not approved by Porsche are installed in the case of subsequent installation.

Printed in Germany – VI, 1990

Installation position of the components and cable routing in the vehicle

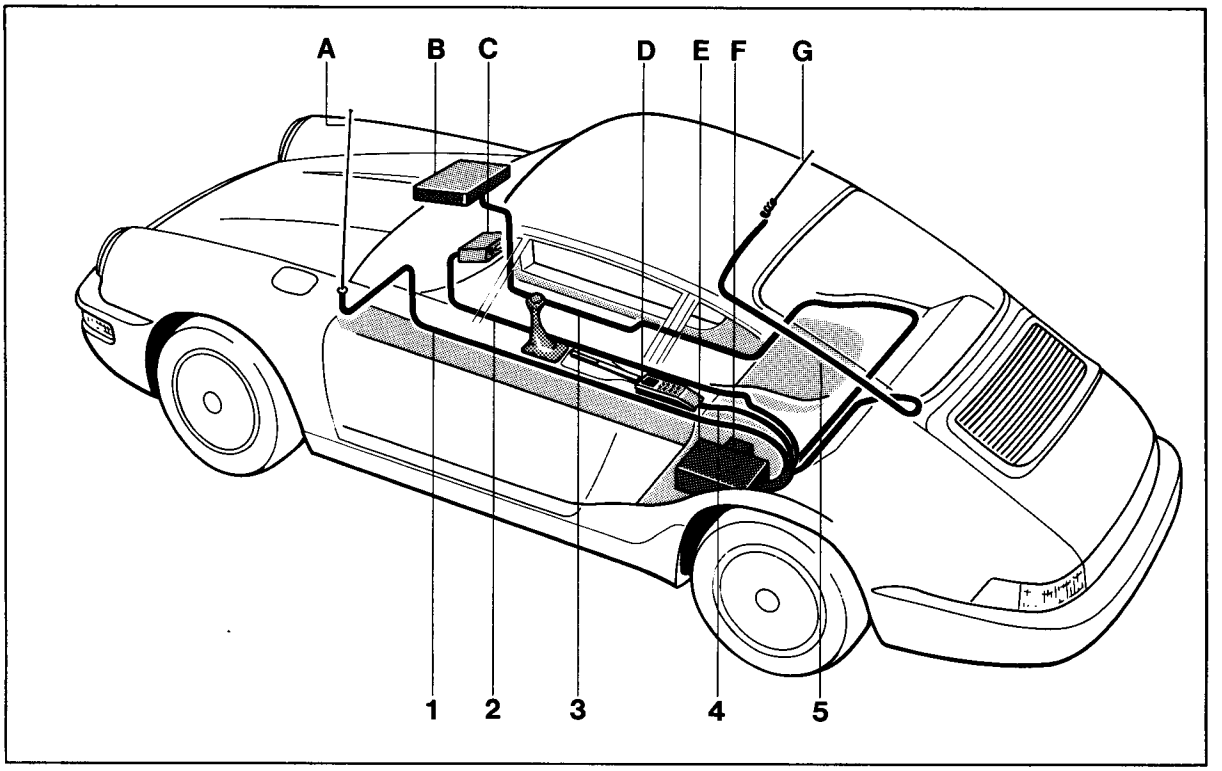

374-91

A - Antenna Targa, Cabriolet

B - Central electrics

C - Radio

D - Control unit

E - Transmitter/receiver unit

F - Antenna duplexer

G - Antenna, coupé

1 - Antenna cable, fender antenna

2 - Antenna cable to radio

3 - Supply cables

4 - Cable, control unit

5 - Antenna cable, roof antenna

Printed in Germany – VI, 1990

Installation position of components

Transmitter/receiver unit

The transmitter/receiver unit is installed on the left occasional seat and can be covered with the occasional seat backrest.

1. Mounting points for holder

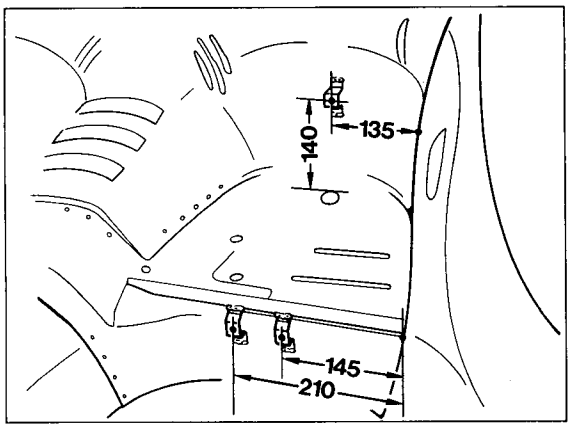

375-91

2. Holder installation

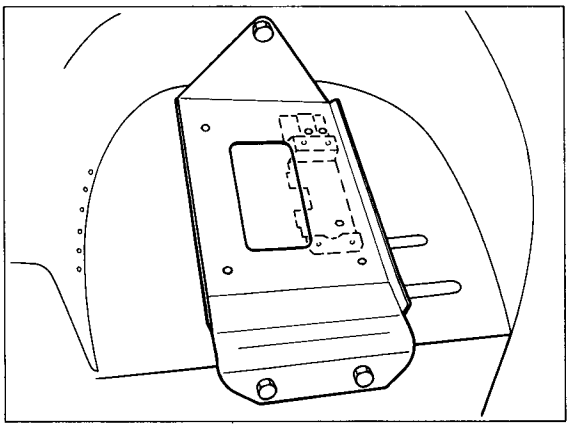

376-91

The holder is secured with 3 hexagon screws M 6 x 12.

Note

An additional holder is required for installation of the cellular transmitter/receiver unit. The second holder is secured on the first holder with 2 screws M 6 x 18 (shown by dashed line).

3. The transmitter/receiver unit is secured with 4 hexagon screws M 6 x 18.

Antenna duplexer (only for M 612)

The antenna duplexer is secured on the right side of the transmitter/receiver unit by means of a holder.

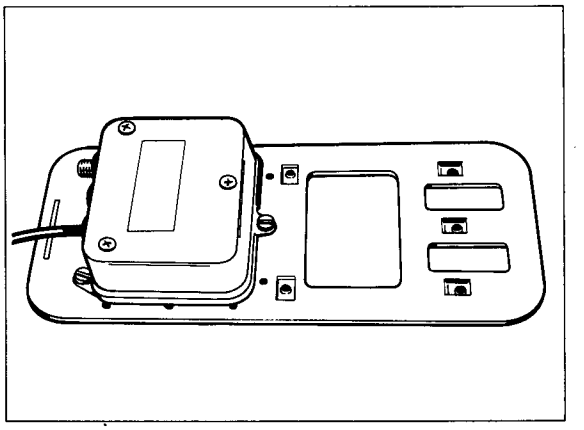

377-91

1. The holder is screwed in position using 5 oval head screws M 5 x 20.

2. The antenna duplexer is screwed in position with 3 oval head screws M 4 x 6.

Control unit installation position

The control unit is installed in the center console instead of the storage compartment behind the hand brake lever.

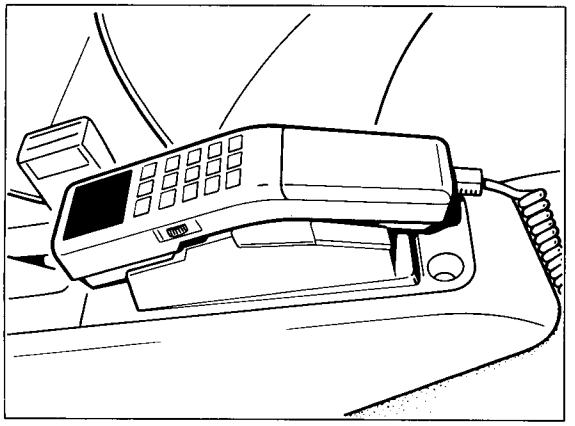

378-91

Antenna installation on coupé

The telephone antenna is secured on the roof.

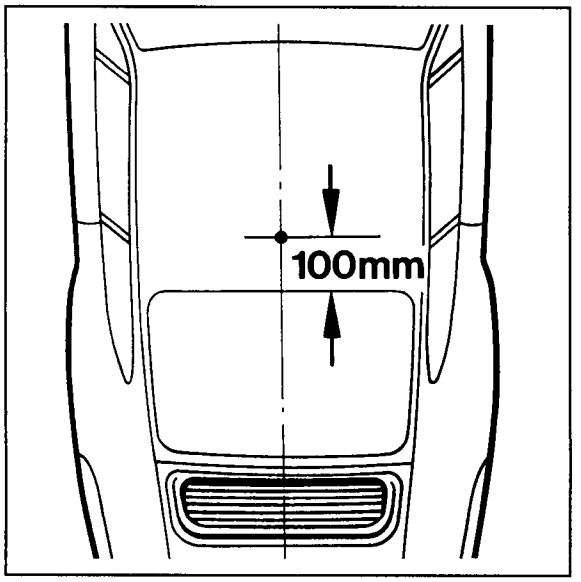

379-91

Ø of the bore 21 mm

The antenna cable is routed from the antenna to the B-column on the left, through the C-column (parallel to the water drain tube on vehicles with sliding roof) to the parcel shelf, over the rear wall to the occasional seat recess. The antenna cable is routed under the insulating mat in the area of the parcel shelf and rear wall.

Antenna installation on Cabriolet and Targa models

The telephone antenna is secured on the left fender.

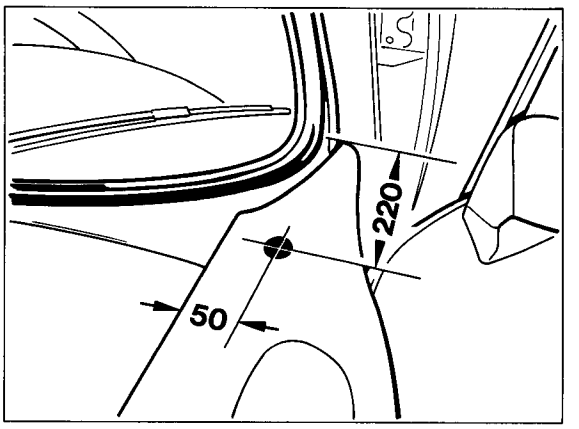

Ø of the bore 14 mm

380-91

The antenna cable is routed from the antenna through the side section - marked by a prick punch point, approx. 120 mm below the bore for the side indicator lamp,
Ø 16 mm - along the passenger compartment wiring harness to the tunnel and on the left top edge of the tunnel to the antenna duplexer.

Printed in Germany – VI, 1990

Routing the supply cables

The cables from terminals 15, 30 and 31 are routed parallel to the passenger compartment wiring harness (No. 2) from the transmitter/receiver unit to the sill on the right, to the trunk floor panel, through a separate bore - marked by a prick punch point, Ø 20 mm - to the central electrics.

Terminal 31 is screwed under as well at ground point VI.

Terminal 30 is screwed under as well via a fuse at the screw point at the central electrics.

Terminal 15 is connected at connector K 13 via a fuse.

The fuses are fitted on relay position R 62 by means of fuse holders.

Fusing, terminal 15: 5 A
Fusing, terminal 30: 15 A

Routing the antenna cable to the radio

The cable is routed from the antenna duplexer on the right next to the transmitter/receiver unit to the tunnel and along the top right edge of the tunnel to the radio.

Printed in Germany – VI, 1990

Retrofitting of a telephone set

Vehicles not prepared for fitting of a telephone set may be retrofitted with a telephone.

Printed in Germany – XIII, 1991

Component installation position and cable routing in the vehicle

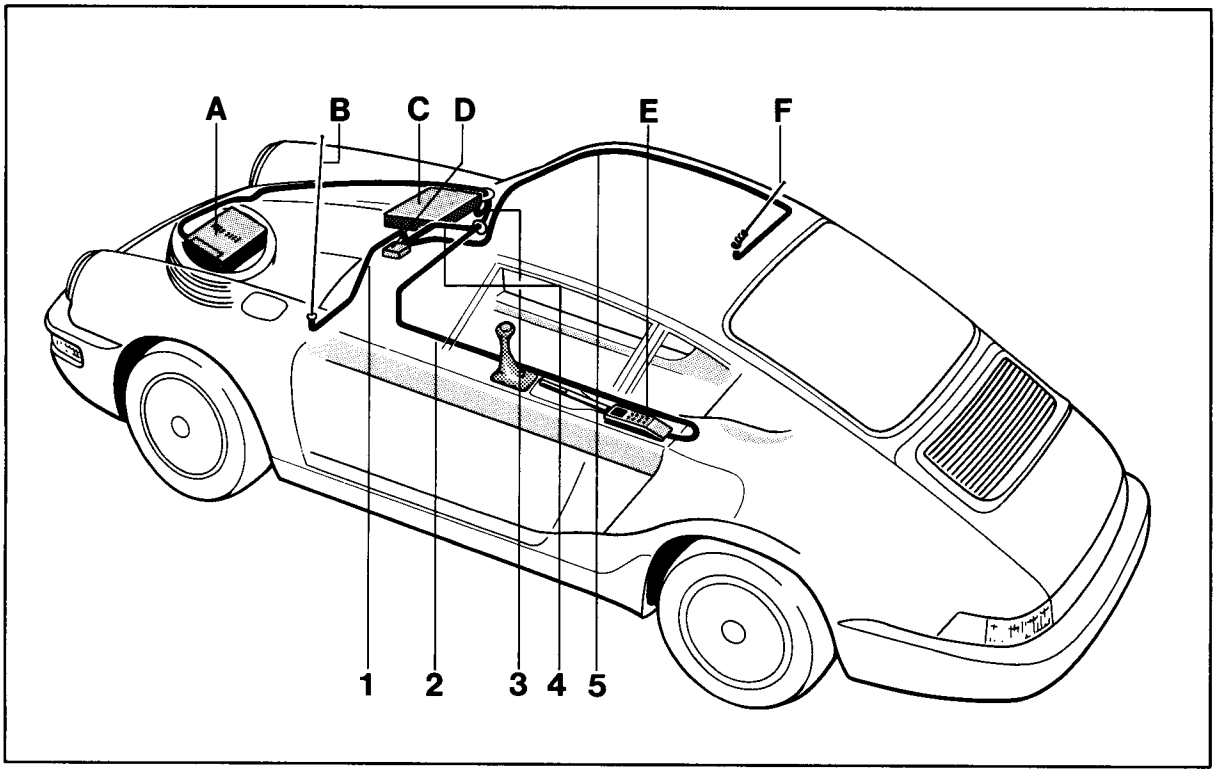

470-91

A – Transmitter-receiver unit

B – Targa, Cabriolet antenna

C – Central electrical system

D – Antenna separating filter

E – Operating unit

F – Coupé antenna

1 – Antenna cable, fender antenna

2 – Cable operating unit

3 – Supply lines

4 – Antenna cable to transmitter-receiver unit

5 – Antenna cable, roof antenna

Printed in Germany – XIII, 1991

Component installation position

Note

Retrofitting is described taking the Philips Porty unit as an example. Fitting of other telephone sets may require certain changes. Do not modify the routing of the cables, however, since this may cause malfunctions during operation of the car. Mounting brackets for the individual components must be shop-made or bought as required.

Transmitter-receiver unit

The transmitter-receiver unit is located in the trunk within the spare wheel.

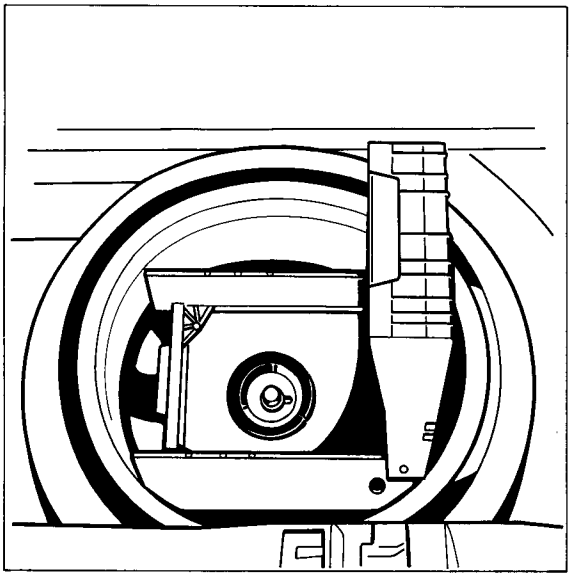

Fitting of mounting bracket 471-91

Note

The transmitter-receiver unit protrudes beyond the spare wheel. To ensure it is covered evenly by the trunk carpet, glue two wooden blocks below the mat that are supported by the spare wheel. Grind off the rear edges of the bracket to allow the bracket to fit within the spare wheel.

Antenna separating filter

The antenna separating filter is fitted with a bracket on the bulkhead.
The Tucker studs for fitting the bracket are provided as of MY '92.

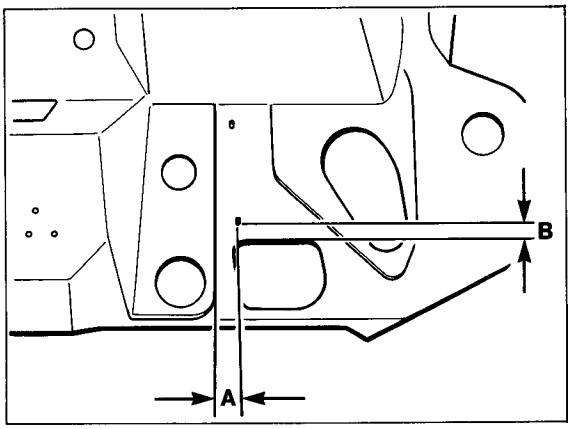

801-91

On vehicles prior to MY '92, the right-hand Tucker stud must be retrofitted (refer to drawing).

A = 23 mm
B = 19 mm

Printed in Germany – XIII, 1991

Operating unit

The operating unit is installed on the center console replacing the oddments tray behind the parking brake lever.

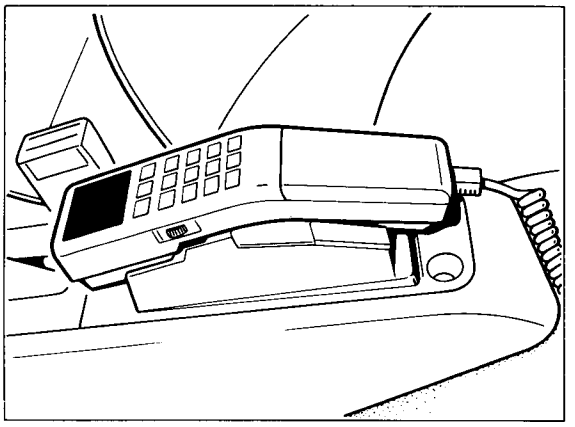

378-91

Coupé antenna

The phone antenna is mounted on the roof.

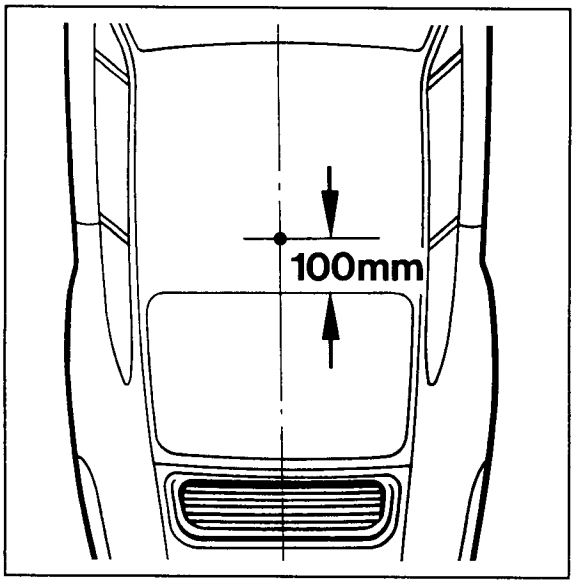

379-91

The antenna cable is routed from the antenna to the right-hand B-post, along the edge of the roof to the A-post, passing the A-post into the passenger's footwell along the main wiring loom to the antenna separating filter.

Note

The windshield antenna must not be used any more. Make sure the radio is also connected across the antenna separating filter. To facilitate installation on the Coupé, the antenna may be fitted on the left-hand fender as on the Cabriolet and Targa.

Cabriolet and Targa antennas

The phone antenna is mounted on the left-hand fender.

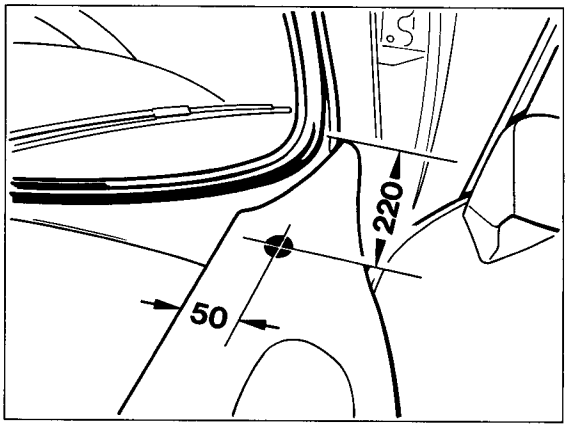

380-91

The antenna cable is routed from the antenna across the side panel (indicated by a punch mark approx. 120 mm below the bore for the lateral turn signal indicator), running along the passenger's side wiring loom across the passenger's footwell to the antenna separating filter.

Note

The windshield antenna must not be used any more. The radio must also be connected to the antenna separating filter.

Routing of the cable

Note

When passing the cables and wires through panel bores, always insert suitable rubber grommets.

Three wiring looms are routed from the transmitter-receiver unit to the individual components:

– to the central electrical system

– to the operating unit

– to the antenna separating filter

Whererever several wiring looms are routed along each other, tie them together using adhesive tape.

The wiring is routed from the transmitter-receiver unit along the closing panel to the right-hand wheel arch.

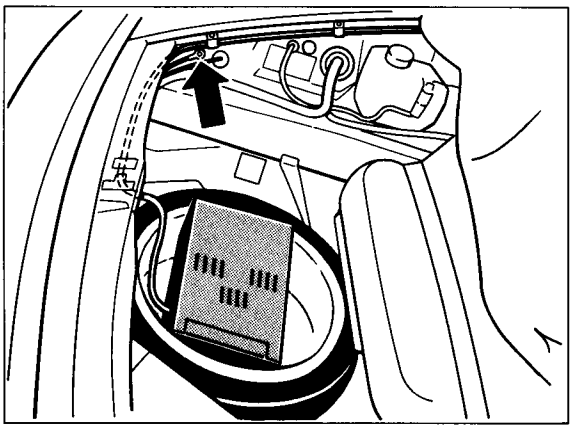

473-91

Connect terminal 31 to ground point II (cf. arrow).
Route from right-hand wheel arch below the trunk edge to the transverse wall. Use 16 mm dia. cable clamps to screw the wiring looms to the mounting clips provided for the trunk floor carpet.

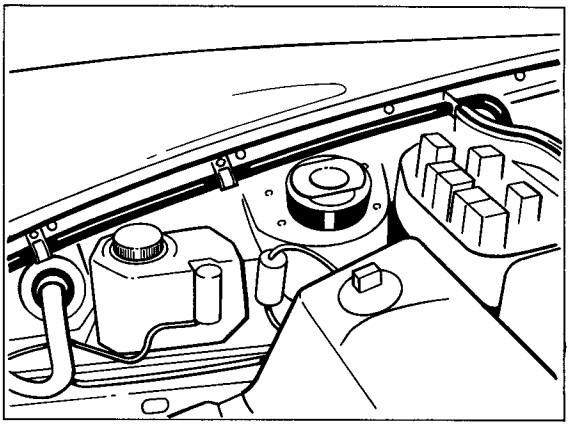

803-91

Route from the transverse wall through the rubber seal end piece to the central electrical system.

Connect the power supply wires (term. 15 and term. 30) to the central electrical system.

Connect term. 30 across a fuse to the screw-on location of the central electrical system.

Term. 15 is connected across a fuse to connector K 13.

The fuses are connected to relay location R 62 using a fuse holder.

Printed in Germany – XIII, 1991

Fuse for term. 15: 5 A
Fuse for term. 30: 15 A

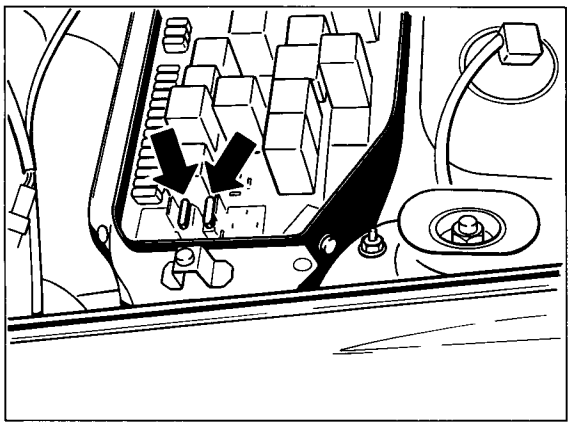

475-91

The wires to the operating unit and the antenna separating filter are routed across a separate 41-mm dia. bore (identified by a punch mark) in the transverse wall to the passenger compartment.

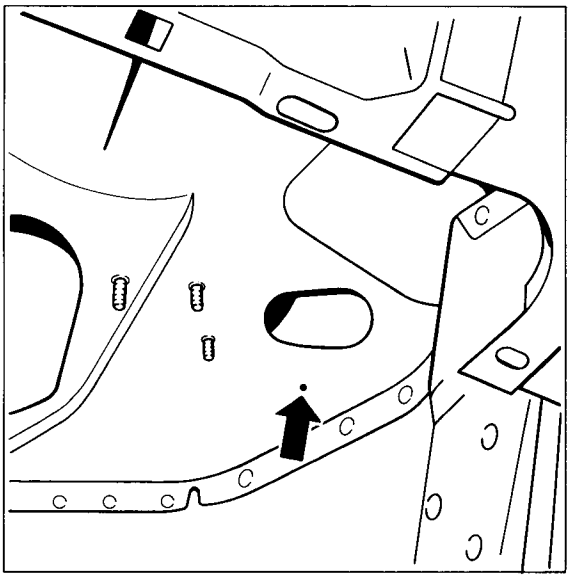

802-91

The supply wires to the operating unit are routed along the passenger compartment wiring loom to the tunnel and along the upper side of the tunnel to the operating unit.

Retrofitting of a CD changer

The following spare parts are required for retrofitting of a CD changer:

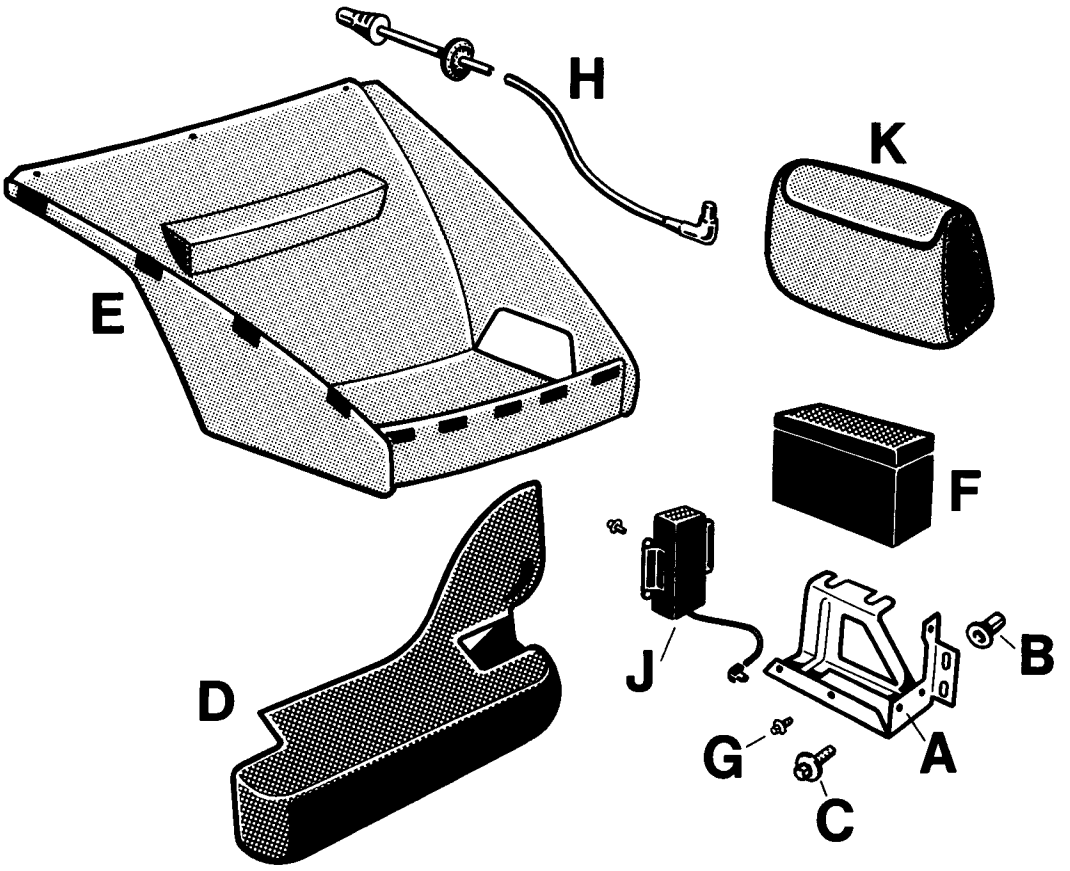

1154 - 91

A = Bracket for CD changer

B = Pop rivet nut M 6/0.9 - 3

C = Combination screw M 6 x 16

D = Protective cover, reinforced

E = Front compartment carpet, modified for CD changer

F = CD changer

G = Combination screw M 4 x 8

H = Interface/radio connecting wire

J = Interface

K = Trim for CD changer

Printed in Germany – XVI, 1992

Retrofitting a CD changer

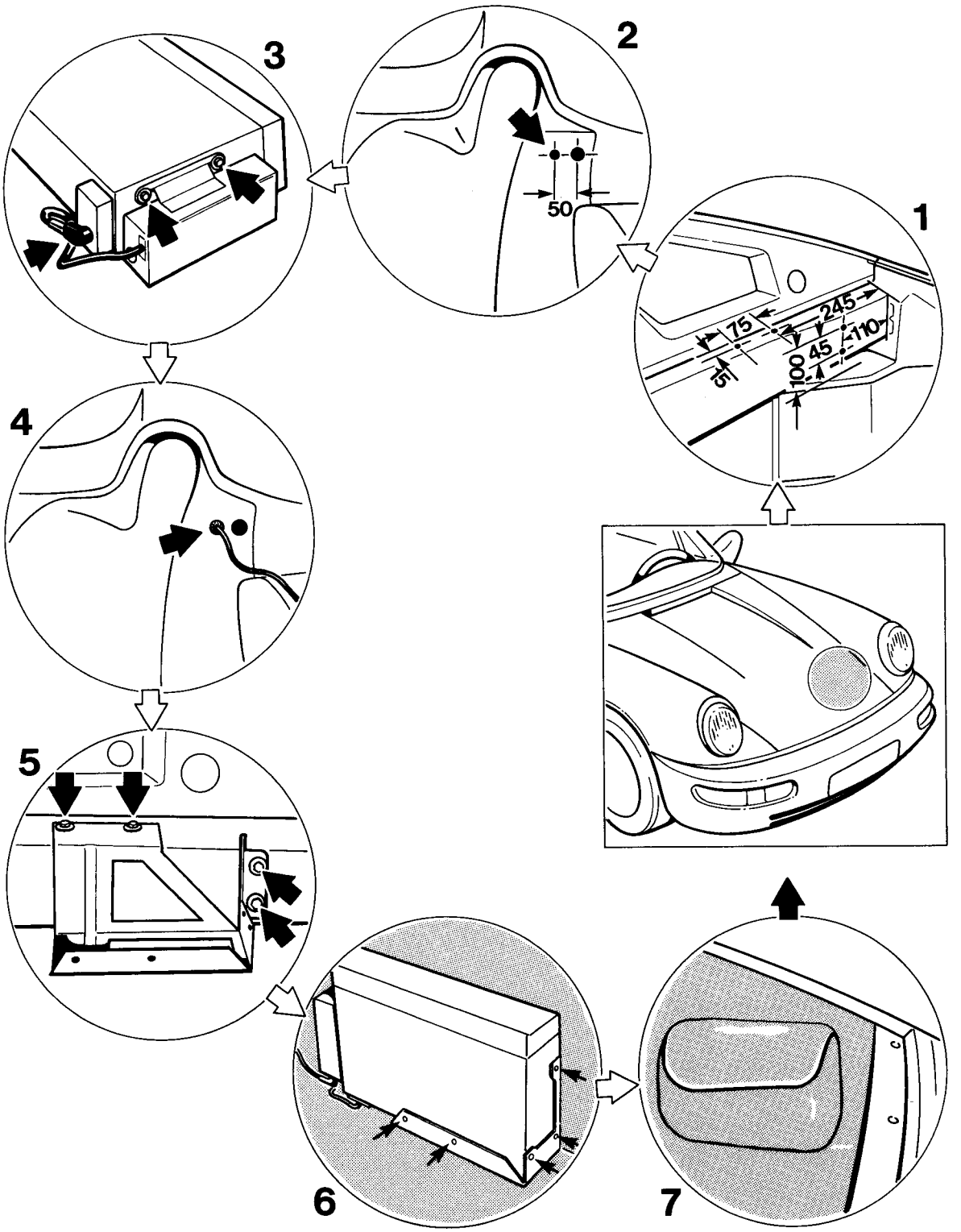

Retrofitting a CD changer

Remove front compartment carpet, spare tire, protective cover, fuel tank and battery!

No.	Operation	Instructions
1	Insert pop rivet nuts for attachment of the CD changer bracket into the side member	Scribe attachment points for CD changer bracket on left-hand front end of side member. Using a 9.5 mm dia. drill bit, drill holes into side member according to scribe marks. Insert M 6 pop rivet nuts into side member and rivet in place using a pop rivet nut gun.
2	Drill 20 mm dia. hole for routing of connecting wire	Scribe hole for routing of CD changer/radio connecting wire on bulkhead and drill to 20 mm dia.
3	Finish assembly of CD changer	Remove transport locks from CD changer. Cover open holes on CD changer using the self-adhesive sheets supplied. Fit interface to CD changer using M 4 x 8 combination screws (4 pc.). Connect interface/CD changer wiring.
4	Insert connecting wire	Route connecting wire across hole in bulkhead, put grommet into place and insert connecting wire into radio. Tie connecting wire to wiring harness along side member.
	Fit fuel tank with reinforced protective cover	Refer to Repair Manual 911 Carrera 2/4, Vol. I, pages 20 - 5 to 20 - 9 (Removing, dismantling and assembling fuel tank)
	Install and connect battery	Enter radio code, correct clock setting and carry out system adaptation.
5	Fit bracket for CD changer	Fit CD changer bracket to side member, using M 6 x 16 combination screws (4 pc.).
6	Fit CD changer	Plug connecting wire into interface (CD changer). Fit CD changer to CD changer bracket, using M 4 x 8 combination screws (5 pc.).
	Check CD changer operation	
7	Fit spare tire, modified front compartment carpet and trim for CD changer	

Printed in Germany – XVI, 1992

Removing and installing wiper motor

1. Remove steering wheel.

2. Remove steering-column panel.

3. Remove speedometer, large and small instrument clusters.

4. Remove air guide.

5. Unclip six-pole plug connector behind small instrument cluster and separate

6. Remove cover from heater/air conditioner (4 screws).

7. Remove left-hand pneumatic spring for luggage-compartment lid. Support lid.

8. Undo fastening nut for linkage, countering with 16 mm wrench on linkage.

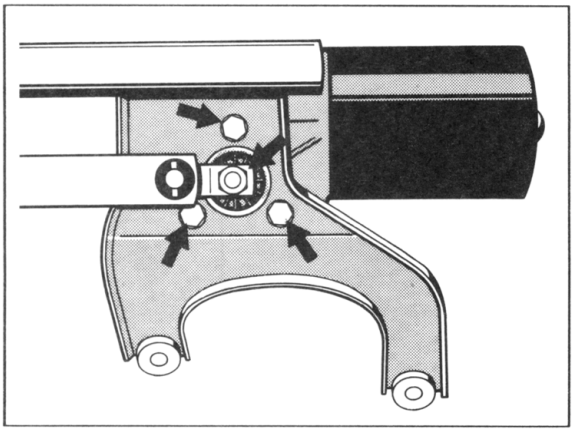

158 - 92

Tightening torque: 22 ±2 Nm

9. Undo fastening screws.
   Tightening torque: 11 Nm (8 ft.lb.)

10. Disconnect ground cable.

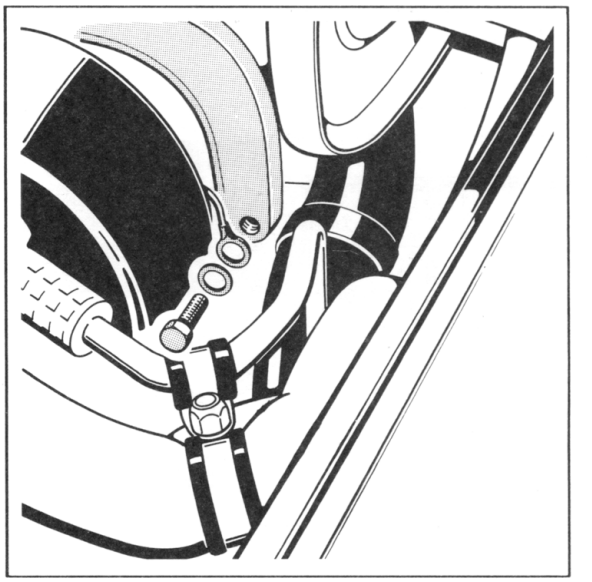

144 - 92

11. Take out wiper motor through cutout for speedometer.

Note

It will be considerably easier to install the wiper motor if the motor is secured with a stud (cut off screw) and nut. After securing, fasten wiper motor with 2 screws. Remove nut and stud and tighten third screw.

Printed in Germany – IX, 1990

Installation position - wiper link

1. Wiper motor in final position.

2. Crank and link form a straight line.

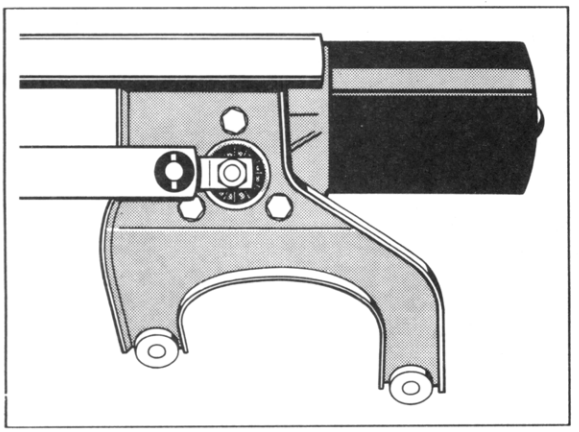

158 - 92

Printed in Germany – IX, 1990

Diagnosis / troubleshooting alarm system

The alarm control unit is diagnosable. It can be read out only with System Tester 9288.

The menu includes the following functional groups:

- Fault memory
- Drive links
- Input signals
- Country codes
- Results
- System check

Note

For some of the faults, two types of causes must be distinguished:

- The fault displayed is an actual fault that has to be remedied.
- The fault displayed is a fault condition that has been caused deliberately, e.g. by leaving the open glove compartment open.

Troubleshooting requires that the person performing the tests

- is familiar with the location of components, function and technical relationship of the systems being tested (refer to Model Information)
- is able to read and evaluate Porsche wiring diagrams
- knows the functions of circuits and relays
- is capable of using testers and of evaluating the test results.

Tools required for troubleshooting:
Special Tool 9540

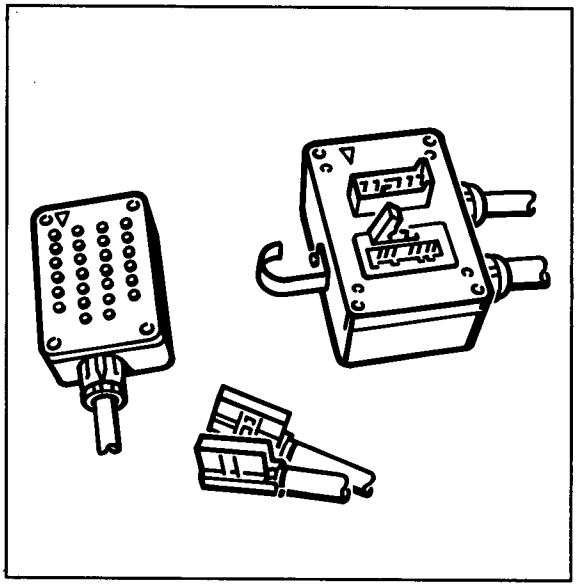

1079-90

Note

The Special Tool is required because connector II is fitted with miniature terminals.
To avoid damaging the terminals, always use the Special Tool for the tests.
When checking for continuity, attach connector to wiring harness only.
When checking signals and voltages, attach connector to wiring harness and control unit.

Printed in Germany – XVIII,1992

Pin assignments of alarm control unit connector

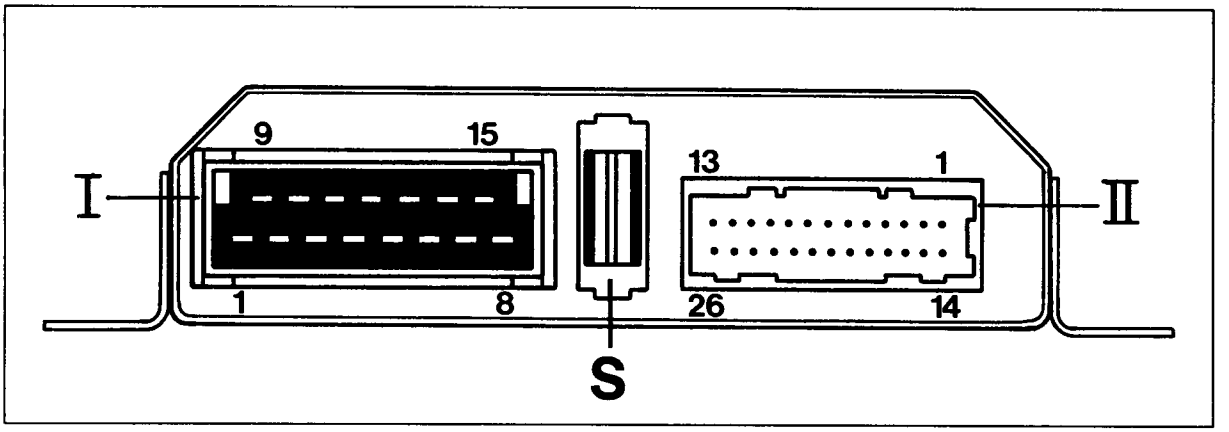

Connector I

Terminal:

1 – Term. 30
2 – Term. 31 (Ground)
3 – Term. 30
4 – Anti-drive off feature
6 – Term. 15
7 – Interior light
8 – Turn signal left
9 – Turn signal right
10 – Horn
11 – Motor „Closed" Actuator door lock
12 – Motor „Open" Actuator door lock
14 – LED right-hand
15 – LED left-hand

S – Fuse

Connector II

Terminal:

1 – Activate / closed
2 – Deactivate / open
3 – Luggage compartment contact
5 – Hood contact
6 – Speedo signal Term. A
7 – Input 1, rear stowage compartment switch with M 419
8 – Input 2
9 – Radio 2
10 – Central locking system position switch „Open"
11 – Central locking system button
12 – Central locking system position switch „Closed"
13 – Radio 1
14 – Diagnosis „L"
15 – Diagnosis „K"
16 – Glove compartment contact
17 – Input 3
18 – Term. 15
20 – Central locking system button light
21 – Door contacts
23 – Term. 61
24 – External electronics

Printed in Germany – XVIII,1992

Fault memory

Overview of possible displays

Control unit defective	Glove comp. open during activation
Voltage failure Term. 30 with active alarm system	Input 2 to ground during activation
Voltage failure during alarm output	Central lock button closed during activation
Position of the drives unplausible	Input 1 to ground during activation
Door(s) open during activation	Input 3 to positive during activation
Engine compartment open during activation	Position switch on drive closed during activation
Luggage comp. open during activation	Position switch on drive open during activation

Printed in Germany – XVIII,1992

Radio (closed loop) interrupted during activation

Radio contact to ground during activation

Printed in Germany – XVIII,1992

Fault, Fault Code	Possible Causes, Elimination, Remarks

Note

After a fault in the alarm system has occurred and after it has been remedied, the fault memory **must** be erased.

Test Point 1

Control unit faulty

- Replace control unit.

Test Point 2

Voltage failure Term. 30 with active alarm system

- Check battery.
- Check fuse at control unit.
- Check wiring according to wiring diagram.

Test Point 3

Voltage failure during alarm output

- Refer to Test Point 2.

Test Point 4

Position of the drives implausible

This fault is also stored if, for example, the driver's door is open when the key is used to actuate the central locking system from the passenger's door.

- Check position switch at drive link:

  1. Disconnect connections T 7 (driver's side) and T 11 (passenger's side). Use a jumper wire to connect terminal 1 on pin side to ground. Use an ohmmeter to check terminals 4 and 6 (pin side) for continuity to ground.
  At terminal 4, continuity to ground (0 - 5 Ω) is present if door is locked.
  At terminal 6, continuity to ground (0 - 5 Ω) is present if door is unlocked.
  If no continuity is displayed, disconnect plug at drive link.

  2. Using an ohmmeter, check if continuity is present from terminal 3 to terminal 2 and from terminal 3 to terminal 4.
  Continuity from terminal 3 to terminal 2 is present if door is locked.
  Continuity from terminal 3 to terminal 4 is present if door is unlocked.

- Check connection from T 7, terminal 4, to T 11, terminal 4, for continuity.
- Check connection from T 7, terminal 6, to T 11, terminal 6, for continuity.

Printed in Germany – XVIII, 1992

Fault, Fault Code	Possible Causes, Elimination, Remarks
	– Check connection from T 7, terminal 4, to control unit plug II, terminal 12, for continuity. – Check connection from T 7, terminal 6, to control unit plug II, terminal 10, for continuity. – Check triggering of drive links (actuators). Connectors T 7 and T 11, terminal 8 and terminal 10, must be grounded in the quiescent state. Positive voltage must be present at terminal 8 if the drive link is triggered in the "open" direction. Positive voltage must be present at terminal 10 if the drive link is triggered in the "closed" direction. Note The drive links (actuators) are triggered for a few milliseconds only. – Check wiring from control unit plug I, terminal 11 and terminal 12, to drive links for continuity.
Test Point 5 Door(s) open during activation	– Check LH and RH door contact switches for short to ground. – Check wiring for short to ground according to wiring diagram.
Test Point 6 Engine compartment open during activation	– Check engine hood switch and engine compartment lamp for short to ground. – Check control unit - engine compartment lamp wire for short to ground.
Test Point 7 Luggage compartment open during activation	– Check luggage compartment cover switch and luggage compartment lamp for short to ground. – Check control unit - luggage compartment lamp wire for short to ground.
Test Point 8 Glove compartment open during activation	– Check glove compartment switch and glove compartment lamp for short to ground. – Check control unit - glove compartment switch wire for short to ground.

Printed in Germany – XVIII, 1992

Fault, Fault Code	Possible Causes, Elimination, Remarks
Test Point 9	
Input 2 to ground during activation	Note The fault may appear if auxiliary systems (e.g. interior monitor) have been fitted. – Check auxiliary system of input 2. – Using Special Tool 9540, check wire from alarm control unit plug II, terminal 8, to auxiliary system for short to ground. – Check auxiliary system wiring for short to ground.
Test Point 10	
Central lock button closed during activation	– Check central locking system button. – Using Special Tool 9540, check wiring from alarm control unit plug II, terminal 11, to button for short to ground.
Test Point 11	
Input 1 to ground during activation	– Check auxiliary system of input 1. Note On vehicles with rear cover (Cabriolet and Targa) instead of the occasional seats, the contacts of the rear parcel trays are wired to this input. – Using Special Tool 9540, check wire from alarm control unit plug II, terminal 7, to auxiliary system for short to ground.
Test Point 12	
Input 3 to positive during activation	– Check auxiliary system of input 3. – Using Special Tool 9540, check wiring from alarm control unit plug II, terminal 17, to auxiliary system for short to positive.

Printed in Germany – XVIII, 1992

Fault, Fault Code	Possible Causes, Elimination, Remarks

Test Point 13

Position switch on drive link closed during activation

- Check triggering of drive links (actuators).
  Ground must be present at plugs T 7 and T 11, terminals 8 and 10, in the quiescent state.
  Positive voltage must be present at terminal 8 when the actuator is triggered in the "open" direction.
  Positive voltage must be present at terminal 10 when the actuator is triggered in the "closed" direction.

  Note

  The actuators are only triggered for several milliseconds.
- Check wirings from alarm control unit plug I, terminals 11 and 12, to actuators for continuity.
- Check position switch of actuator (refer to Test Point 4).

Test Point 14

Position switch on drive open during activation

- Refer to Test Point 13.

Test Point 15

Radio (closed cloop) interupted during activation

- On radios that do not have this contact, radio 1 input is wired to ground.
  Check wire from control unit plug II, terminal 13, for continuity to ground.

Test Point 16

Radio contact to ground during activation

- Check insulating strip on radio.
- Check wire from alarm control unit plug II, terminal 9, to radio plug, terminal 6, for short to ground.
- Check alarm contact at radio or bracket, respectively.

Drive links

This function allows the following components to be triggered:

- Function display in lock buttons
- Lock
- Alarm horn
- Turn signals
- Interior light
- Button light in central locking system button
- External output
- Anti-drive-off feature

```
Function display
1 = on
3 = off
Return :              N
```

If the function display is turned on, the doors are locked and the LEDs light up permanently. The „on" display flashes on the tester.
If the function display is turned off again, the LEDs are turned off as well. The doors are unlocked again when the user returns to the menu.

```
Lock
1 = closed
3 = open
Return:               N
```

Lock closed: Doors are locked.
Lock open: Doors are unlocked.

```
Alarm horn
1 = on
3 = off
Return:               N
```

Alarm horn on: Alarm horn is triggered continuously (continuous sound).

```
Turn signals
1 = on
3 = off
Return:               N
```

Turn signals on: All turn signals are triggered continuously (continously lit).

```
Interior light
1 = on
3 = off
Return:               N
```

The interior light must be in the door contact position.

```
Button light
1 = on
3 = off
Return:               N
```

Button light on: The light in the central lock system button is triggered.

```
External output
1 = on
3 = off
Return:               N
```

The external output is used to trigger other control units, e.g. ultrasonic monitoring of the interior.

Printed in Germany – XVIII,1992

```
Anti-drive-off feature
1 = on
3 = off
Return:              N
```

Anti-drive-off feature on: Activation of fuel pump relay interrupted. It must no longer be possible to start the engine.

Possible fault displays

1.

```
No activation
Door(s) open !

Return:              N
```

– Close doors

– Check door contact wires to alarm control unit plug II terminal 21 for short to ground.

2.

```
No activation
Engine running!

Return:              N
```

– Turn off engine, only switch on ignition.

3.

```
No response
Signal unplausible !

Return               N
```

– Replace control unit.

4.

```
No activation
Fault summary!

Return:              N
```

Note

Fault summary is displayed if several drive links (actuators) are triggered simultaneously, e.g. if turn signals are on while the function display is checked.

– Check wiring to alarm control unit plug I, terminals 8, 9, 10, 11, 12, and plug II, terminal 20, for short to positive.

– Check wiring to alarm control unit plug II, terminal 24 (if connected) and terminal 7, for short to ground.

5.

```
No activation
Fault summary !
Position switch ?
Return:              N
```

– Refer to item 4.

– Also check position switch (refer to page D 90- 5).

6.

```
Activation
correct.
Position switch?
Return:              N
```

– Check position switch (refer to page D 90 - 5).

7.

```
No response
Signal unplausible !
Position switch ?
Return:              N
```

– Check position switch (refer to page D 90 - 5).

– Replace control unit.

Printed in Germany – XVIII,1992

8.

```
Unknown
response code!

Return:              N
```

– Check following ground points:

– 1. MP X: Battery to body

– 2. MP XI. Body to transmission

– 3. MP XX: Body to alarm control unit

Printed in Germany – XVIII,1992

Input signals

This function allows the following input signals to be checked:

- Door contacts
- Engine compartment switch
- Luggage compartment switch
- Position switches at drive motors
- Central locking system button
- Glove compartment button
- Radio closed loop
- Alarm contact radio bracket
- Microswitch for activation of alarm
- Microswitch for deactivation of alarm
- Input 1 (auxiliary system)
- Input 2 (auxiliary system)
- Input 3 (auxiliary system)
- Speedo signal
- Term. 15
- Term. 61

1.

```
Door(s)

- open -
Return:              N
```

Open is displayed if at least one door is open. Closed is displayed if both doors are closed. If required, check wiring to alarm control unit for open circuit or short to ground according to wiring diagram.

2.

```
Engine compartment

- open -
Return:              N
```

Open is displayed if engine hood is open. Closed is displayed if engine hood is closed. If required, check wiring to alarm control unit for open circuit or short to ground according to wiring diagram.

3.

```
Luggage compartment

- open -
Return               N
```

Open is displayed if tailgate is open. Closed is displayed if tailgate is closed. If required, check wiring to alarm control unit for open circuit or short to ground according to wiring diagram.

Printed in Germany – XVIII,1992

4.

```
Position switch
open: - closed -
closed:  - open -
Return              N
```

This display appears if both lock buttons are in the „open" position.

4a.

```
Position switch
open: - closed -
closed:  - closed -
Return:             N
```

This display appears if one lock button is in the „open" and one lock button is in the „closed" position.

4b.

```
Position switch
open: - open -
closed:  - closed -
Return:             N
```

This display appears if both lock buttons are in the „closed" position. If required, check position switch (refer to page D 90 - 5)

5.

```
Central locking
system button
-  open -
Return:             N
```

Open is displayed if the central locking system button has not been pressed down. Closed display appears if the central locking system button is pressed down.

6.

```
Glove compartment

- open -
Return:             N
```

Open is displayed if glove compartment is open. Closed is displayed if glove compartment is closed.

7.

```
Radio
(closed loop)
- closed -
Return:             N
```

The closed loop must be closed. On radios that do not have this contact terminal, terminal 13, plug II, is wired to ground.

– If the closed loop is open, check wiring from alarm control unit, terminal 13, to ground point XX or to radio for open circuit.

8.

```
Radio contact

- open -
Return:             N
```

If Radio contact closed is displayed:

– Check insulating strip on radio.

– Check wiring from alarm control unit plug II, terminal 9, to alarm contact at radio bracket or to alarm contact at CD player for short to ground.

Printed in Germany – XVIII,1992

9.

```
Activate
button
- open -
Return:              N
```

Note

The spare key is required for checks according to item 9 and 10 since the ignition must be switched off during the diagnostics.

Use the spare key to turn the locks of the driver's and passenger doors into the "locking" position one after another. The display must then switch from "open" to "closed" ("locked").

- If "closed 2 ("locked") is displayed in the rest position, check wiring from the lock barrels to the alarm control unit connector II, terminal 1, (terminal 2 for RHD vehicles) for short to ground according to wiring diagram.

- If the display remains set to "open" after then lock barrels have been actuated, check wirings for continuity according to wiring diagram.

10.

```
Deactivate
button
- open -
Return:              N
```

Use the spare key to turn the locks of the driver's and passenger doors into the "open" position one after another. The display must then switch from "open" to "closed" ("locked").

If "closed" ("locked") is displayed in the rest position, check wiring from the lock barrels to the alarm control unit connector II, terminal 2, (terminal 1 for RHD vehicles) for short to ground according to wiring diagram.

- If the display remains set to "open" after the lock barrels have been actuated, check wirings for continuity according to wiring diagram.

11.

```
Input 1

- open -
Return:              N
```

Note

On vehicles with rear parcel shelf (Cabriolet and Targa), the contacts of the rear parcel trays are wired to this input. Diplay "open" for inputs that are not wired or if the parcel trays are closed (contacts open).

Display "closed" if at least one parcel tray is open (contact closed). If required, check wiring according to wiring diagram.

12.

```
Input 2

-  open -
Return:              N
```

In standard version, this input is not wired. Auxiliary systems may be wired across this input. Display is "open" if input is not wired. If required, check auxiliary system according to manufacturer's instructions.

Printed in Germany – XVIII,1992

13.

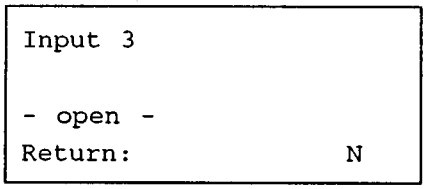

Refer to item 12.

14.

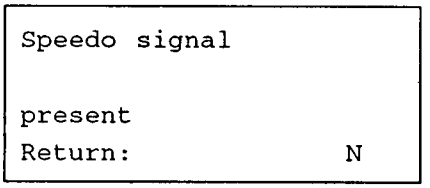

Display is not present if vehicle is stationary.
Display is present if vehicle is moving.
If required, check wiring from alarm control unit plug II, terminal 6, to speedometer according to wiring diagram.

15.

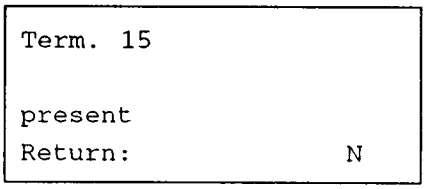

If display is not present, check wire from alarm control unit plug II, terminal 18, to central electrical system according to wiring diagram.

16.

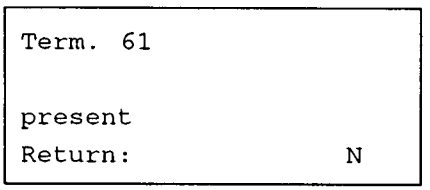

Note

If present is displayed although the engine is not running, this may be due to a summary fault (refer to item 4, Drive links functional group). In this case, start by remedying this fault.
If display is not present although the engine is running, check wire from alarm control unit plug II, terminal 23, to generator according to wiring diagram.

Printed in Germany – XVIII,1992

Country codes

The System Tester 9288 may be used to encode three pre-set alarm versions

1. RoW (Rest of world)
2. CH (Switzerland)
3. USA

Alarm output

RoW

- Alarm horn max. 30 sec. interval.
- Turn signals max. 5 min.
- Interior light flashes in an asynchronous manner with turn signals (if in door contact position).

CH

- Alarm horn max. 30 sec. continuous.

USA

- Alarm horn max. 4 mins. interval.
- Turn signals max. 8 min.
- Interior light flashes in an asynchronous manner with turn signals (if in door contact position).

Alarm system encoding

When replacing the control unit, activate one of the preset country codes according to the national C number.

RoW

C numbers: 00, 05, 07, 09, 11, 12, 13, 14, 16, 17, 19, 20, 21, 22, 27, 28, 99.

CH

C number: 10.

USA

C numbers: 02, 04, 06, 08, 15, 18, 23, 24, 26, 31, 32, 36.

```
Country code
RDW     PORSCHE        *
1 = coding
Return:                N
```

The Country code menu displays the coded version in the top left corner, e.g. RoW; the center displays Porsche or Workshop, depending on where the system has been coded. The asterisk on the right is displayed for versions that include the interior lights in the alarm emission.

Printed in Germany – XVIII,1992

Result memory

The result memory registers triggering of an alarm, the contact that triggered the alarm as well as the type of activation. A maximum of 10 results may be stored. If another result is stored, the oldest result stored is deleted. The result with the highest number is the most up-to-date result.
Alarms may be triggered by contacts at the following components:

- Doors
- Engine compartment
- Luggage compartment
- Glove compartment
- Radio

Additional alarm triggering options:

- Term. 15 on after system has been activated
- Signal to input 1
- Signal to input 2
- Signal to input 3
- Position switch
- Open circuit of closed loop (radio).

Note

Up to three alarms may be triggered across input 2.

The following types of activation are to be distinguished:

- **normal,** i.e. locking the doors with the key, thus activating the central locking system
- **locking three times,** i.e. locking one of the door locks rapidly for three consecutive times
- **System check**

The type of activation may be invoked with button 1 on the below display:

```
Alarm:            - x -
activated by
xxxxxxxxxxxxxx
```

Note

Erase the result memory whenever the alarm system has been checked.

System check

The System check menu item may be used to check all components triggering an alarm (except Term. 15). In this case, the alarm horn is only triggered twice for a short interval.

The following display appears after the System check menu item has been called:

```
System check !

Continue:            >
```

The individual components that may trigger an alarm (except Term. 15) can now be checked. E.g. if a door is opened, an alarm is triggered. At the same time, triggering of the alarm is stored in the result memory. After the check has been completed and the > key has been pressed, the following display appears:

```
Note:
Erase result
memory !
Return:              N
```

The result memory **must** be erased since the check has been stored in the memory.

Printed in Germany – XVIII,1992

Workshop Manual

911 Carrera 4

Dr. Ing. h.c. F. Porsche Aktiengesellschaft

The workshop manual is only for the internal use of the Porsche Dealer Organization.

© 1988 Dr. Ing. h.c. F. Porsche
Aktiengesellschaft
Technical Service Department
D-7140 Ludwigsburg

All rights reserved – Printed in Germany

WKD 482520

List of Repair Groups Carrera 4

General	Technical Data	Page 0.1
Repair Groups		Group
Volume I	Maintenance, Self-diagnosis	03
	Engine, Crankcase, Suspension	10
Engine, Maintenance	Engine, Crankshaft, Pistons	13
	Engine, Cylinder Head and Valve Drive	15
	Engine, Lubrication	17
	Engine, Cooling	19
	Fuel Supply	20
	Fuel System, Electronic Injection	24
	Exhaust System/Emission Controls	26
	Starter, Power Supply, Cruise Control	27
	Ignition System	28
	Diagnosis	
Volume II	Clutch, Controls	30
	Clutch	32
Transmission (manual)	Manual Transmission, Controls, Case	34
	Manual Transmission, Gears, Shafts	35
	Differential, Transaxle System, All-Wheel Drive	39
	Diagnosis	
	Clutch, Controls	30
Volume III	Torque Converter	32
	Automatic Transmission, Controls, Case	37
Transmission (automatic)	Automatic Transmission, Gears, Shafts	38
	Differential, Transaxle System	39
	Diagnosis	
Volume IV	Front Wheel Suspension	40
	Rear Wheel Suspension, Axle Shaft	42
Chassis	Wheels, Tires, Alignment	44
	Antiblock System	45
	Brakes, Mechanical	46
	Brakes, Hydraulics, Regulator, Booster	47
	Steering	48
	Diagnosis	
Volume VI	Body-Front Section	50
	Body-Center Section	51
Body	Body-Rear Section	53
	Lids	55
	Doors	57
	Electric Sunroof	60
	Hardtop	61
	Bumpers	63
	Glasses, Window Control	64
	Exterior Equipment	66
	Interior Equipment	68
	Seats	72
	Seat Covers	74
Volume VI	Heater	80
	Ventilation	85
Heating, Ventilation, Air Condition	Air Conditioner	87
	Diagnosis	
Electrics	Instruments, Fuel Gauge, Alarm System	90
	Radio, Telephone, On-board-computer	91
	Windshield Wipers and Washer	92
	Exterior Lights, Lamps, Switches	94
	Interior Lights	96
	Diagnosis	
Volume VII	Wiring	97
Electrics Wiring Diagrams		

Printed in Germany, 1988

The workshop manual of the Carrera 4 also includes that for the Carrera 2.
The Carrera 4 acts as the basis for description of the repairs in the manual.
"Carrera 4" also appears on every page in the header line.

Deviating descriptions for repairs on the Carrera 2 follow those of the Carrera 4. These repair descriptions for both models are separated by a yellow sheet.
"Carrera 2" appears on all pages in the header line after the separating sheet. The page number starts with 100 as an additional distinction.

Wiring

Page

Additional electrical equipment . . . . . 97 - 01
Repairing wiring harness No. 2 and No. 3 . . . . . 97 - 03
Repairing wiring harness No. 173 (DME wiring harness) . . . . . 97 - 07
Wiring diagram type 911 Carrera 4 model 89 . . . . . 97 - 1
Wiring diagram type 911 Carrera 2/4 model 90 . . . . . 97 - 33
Wiring diagram type 911 Carrera 2/4 model 91 . . . . . 97 - 71
Wiring diagram type 911 Carrera 2/4 model 92 . . . . . 97 - 109
Wiring diagram type 911 Carrera 2/4 model 93 . . . . . 97 - 149

Printed in Germany – XXI, 1994

Additional electrical equipment

Note

Additional electrical equipment must be connected only to the connection possibilities described below.

Terminal 30 not fused:

1. Screw terminals at feeder to central electrics

2. Connector A 11

Terminal X not fused: Connector A 14

Terminal 15 not fused: Connector A 22

Terminal 31

1. Connector A 23

2. Ground points VI

3. Ground point VII

Fusing possibilities

Note

Additional electrical equipment must be fused if the above connection possibilities can be used.

1. Fuse 26:

Incoming connector D 11

Outgoing connector C 45

2. Fuse 29:

Incoming connectors C 35 and D 15

Outgoing connector D 23

3. Separate fuses

Printed in Germany – VI, 1990

Repairing wiring harness No. 2 and No. 3

Note

As of MY '93, the combination wires for ABS and BVA (brake pad wear monitor) are incorporated into the wiring harness. When repairing damaged wiring, the integral wirings may be cut off and replaced with repair wires.

Wiring harness No. 2 (passenger compartment) is already provided with the left and right rear wires.

Wiring harness No. 3 (trunk floor panel) includes the left and right front wires.

Run the following functional checks after the repair:

- ABS: Check with ABS tester.
- BVA (brake pad wear monitor): The warning lamp must go off when the engine is running and if the pads are o.k.

Connector joints

Rear
In the right-hand and left-hand seat well, before the wires branch off to the outside.

Front
In the right-hand and left-hand luggage compartment above the side member near the spring strut domes.

Rear

1. Disconnect battery.
2. Fold emergency seat backrests forward.
3. Remove rear wall trim.
4. Use adhesive tape to locate insulating padding out of the way.

Note

Unscrew convertible top motors (4 screws) on Cabriolet models.

5. Cut open insulating tube for wiring harness, starting at the rubber grommets and continuing for approx. 20 cm to the right.
6. Remove PVC insulating tape.
7. Remove shrink-fit caps from connector joints.
8. Cut off connectors.
9. Remove combination wires.
10. Fit repair wires, starting at wheel carriers and routing them towards the seat well.
11. Strip wire along a length of 10 mm.
12. Connect wires according to table using crimp connectors and standard crimping tool (A).

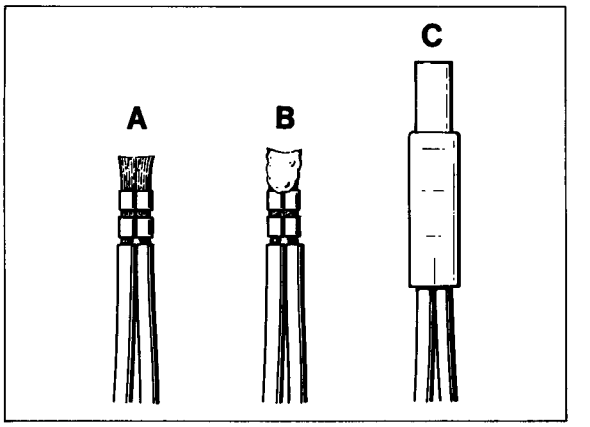

1316 - 97

Printed in Germany – XX, 1993

Combination wire		Wiring harn. No. 2
Color	**Length**	**Color**
		rear left
br/sw	30 mm	br/sw
br/gn	60 mm	br/gn
br/ws	90 mm	ws*
br/bl	120 mm	Screen
br	150 mm	br
		rear right
br/sw	30 mm	br/sw
br/gn	60 mm	br/gn
br/ws	90 mm	ge*
br/bl	120 mm	Screen
br	150 mm	br

* screened wires

br - brown
sw - black
ge - yellow
bl - blue
ws - white
gn - green

13. Solder tips after crimping (B).

14. Fit shrink-fit caps and shrink them using a hot-air gun (C).

15. Wrap up entire connector joint area using commercially available PVC tape.

Front right

1. Disconnect battery.

2. Remove RH front wheel

3. Remove rear wheel housing liner.

4. Slacken tie-wrap in wheel housing area.

5. Slacken tie-wrap in luggage compartment.

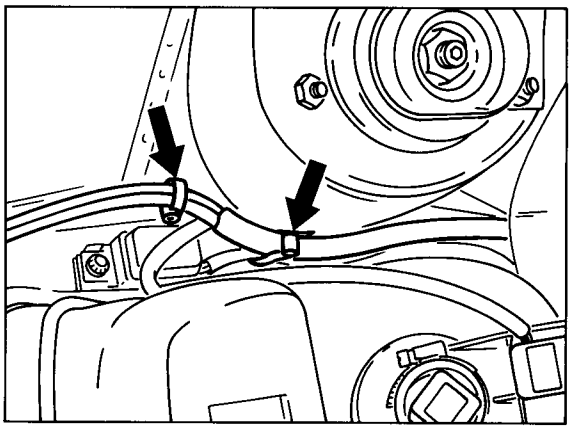

1372 - 97

6. Cut open insulating tube along wiring harness.

7. Remove PVC insulating tape.

8. Remove shrink-fit caps from connector joints.

9. Cut off connectors.

10. Remove combination wiring.

11. Fit repair wiring.

12. Strip wires along a length of 10 mm.

Printed in Germany – XX, 1993

13. Connect wires according to table using crimp connectors and standard crimping tool (A).

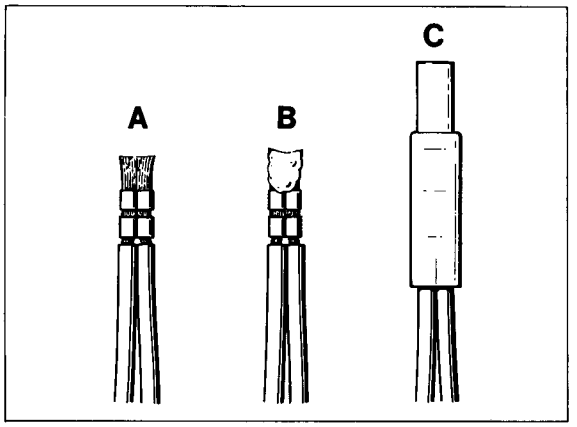

1316 - 97

Combination wire		Wiring harn. No. 3
Color	**Length**	**Color**
		front right
br/sw	30 mm	br/sw
br/gn	60 mm	br/gn
br/ws	90 mm	gn*
br/bl	120 mm	Screen
br	150 mm	br

* screened wire
br - brown
sw - black
bl - blue
ws - white
gn - green

14. Solder tips after crimping (B).

15. Fit shrink-fit caps and shrink them using a hot-air gun (C).

16. Wrap up entire connector joint area using commercially available PVC tape.

Front left

1. Disconnect battery.
2. Remove LH front wheel
3. Remove rear wheel housing liner.
4. Slacken tie-wrap in wheel housing area.
5. Remove bracket for brake fluid reservoir.

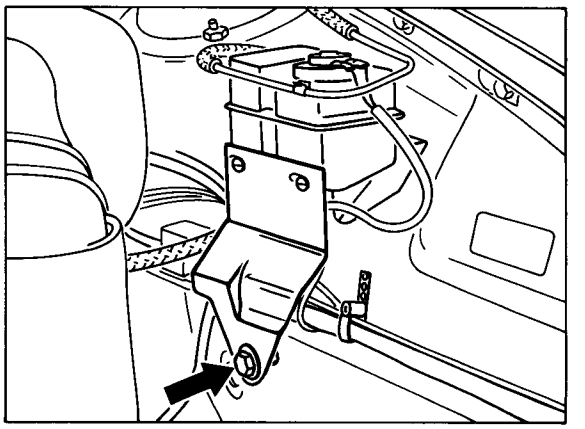

1373 - 97

6. Slacken tie-wrap in luggage compartment.

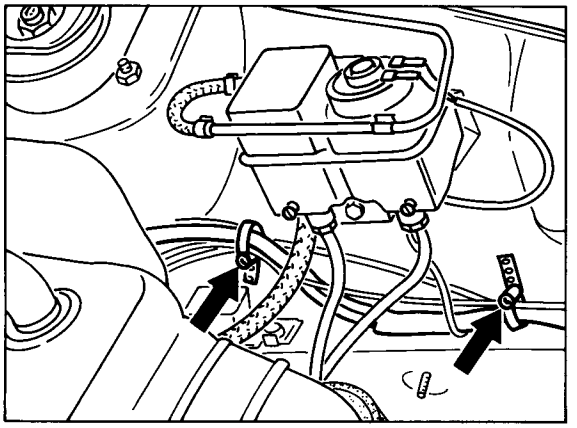

1374 - 97

7. Cut open insulating tube along wiring harness.

8. Remove PVC insulating tape.

9. Remove shrink caps from connector joints.

10. Cut off connectors.

11. Remove combination wire.

12. Fit repair wiring.

13. Strip wires along a length of 10 mm.

14. Connect wires according to table, using crimp connectors and standard crimping tool (A).

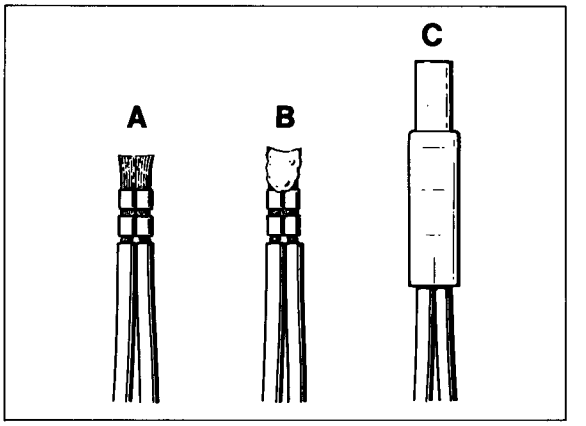

1316 - 97

Combination wire **Wiring harn. No. 3**

Color	Length	Color
		front left
br/sw	30 mm	br/sw
br/gn	60 mm	br/gn
br/ws	90 mm	rt*
br/bl	120 mm	Screen
br	150 mm	br

* screened wire

br - brown
sw - black
rt - red
bl - blue
ws - white
gn - green

15. Solder tips after crimping (B).

16. Put shrink-fit caps into place and shrink them using a hot-air gun (C).

17. Wrap up entire connector joint area using commercially available PVC tape.

Printed in Germany – XX, 1993

Repairing wiring harness No. 173 (DME wiring harness)

Replacing air flow sensor connector

Situation: Rough engine running, e.g. poor throttle response, rough idling.

Note

Leave a gap of approx. 15 mm between the air flow sensor connector and the oil tank breather pipe. If the gap is too small or if the connector touches the breather pipe, check the breather pipe routing and correct it if required.

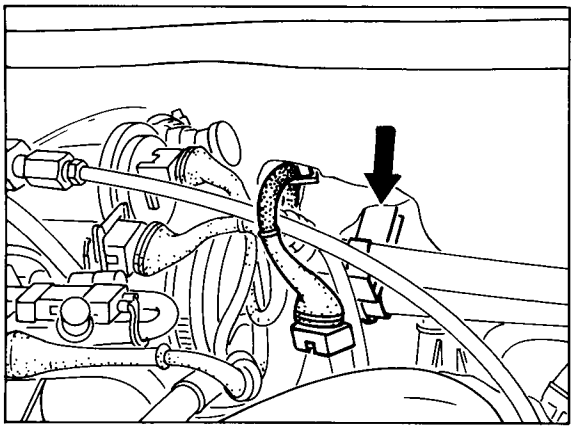

Speedster 1786-97

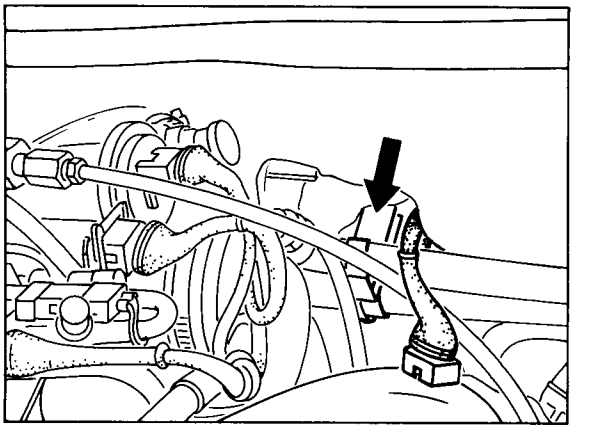

911 Carrera 1787-97

On the Speedster, the breather pipe bracket is located to the right of the air flow sensor wire while, on the 911 Carrera, it is located to the left.

1. Remove upper air filter section with filter element.

2. Release oil tank brather hose from rubber shroud.

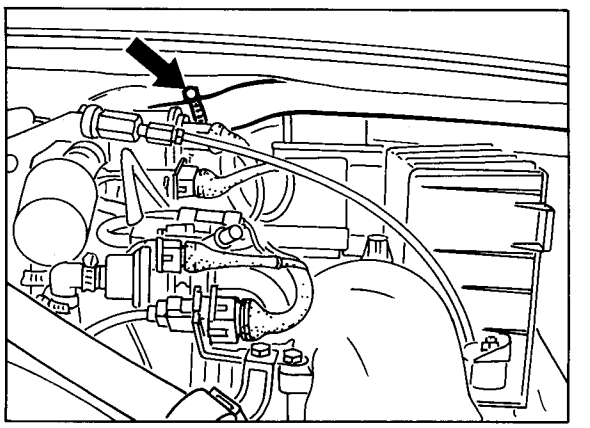

1788-97

3. Pull connector off the air flow sensor. The connector is accessible from the right-hand side across the air filter.

Printed in Germany – XXI, 1994

4. Pull out wiring harness complete with connector from between air flow sensor and idle speed positioner towards the rear.

5. Push back rubber sleeve.

Note

If the vehicle is fitted with a rubber sleeve with straight wire exit, fit angled rubber sleeve (wire exits towards left) from the repair kit.

6. Cut off wires close to the connector housing.

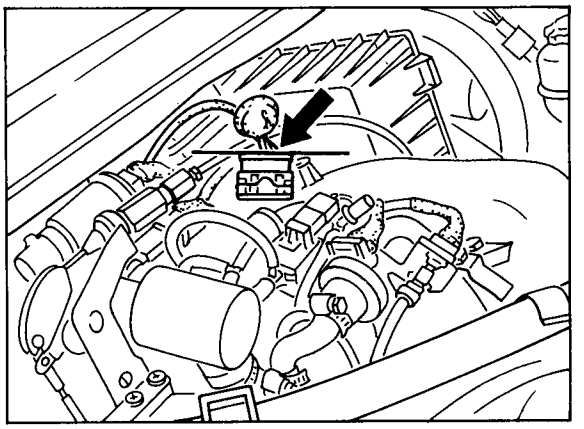

1789-97

7. Strip wires along a length of approx. 5 mm.

8. Crimp connector contacts from repair kit with a crimping tool, e.g. VAG 000.097.003 A.

9. Connect wires to connector housing according to wiring diagram or the below table.
   1 - blue/grey
   2 - green/red
   3 - blue/green
   4 - green/black
   5 - not used

Wiring Diagram Type 911 Carrera 4 Model 89

The wiring diagram consists of *11 individual wiring diagrams*, 1 sheet *construction components* and 1 sheet *plug connections and ground points*. These are divided into coordinate fields.

Each individual wiring diagram contains a part of the central-electrics box in a dashdotted frame.

This part of the central-electrics box shows all the lines and relays necessary for the individual wiring diagram.

The earth/ground points are identified by "MP" and their location is shown in a vehicle diagram.

The 10-pin connectors on the central-electrics box are clipped together out of 3 parts, the 20-pin connectors are clipped together out of 5 parts.

Part 1, with the moduled-on fastening lug, is the "starting element".

Parts 2,3 and 4 are "module elements".

The 10-pin connectors only contents one "module element".

Start- and module elements are identified by the numbers 1.....5.

Part 5 ist a "coding element".

The designations of the plug connections in the wiring diagram refer to the "starting element" from, for example, B 11.....15, and to the first module element from B 21.....25.

Wiring Diagram Type 911Carrera 4 Model 89

	Coordinates	
Sheet 1	1 - 10	Lights
Sheet 2	11 - 20	Alarm System, Central Locks, Mirror, Power Window Regulator
Sheet 3	21 - 30	Heater, AC, Coolant Fan, Rear Window Defogger
Sheet 4	31 - 40	ABS, Porsche Dynamic AWD Control
Sheet 5	41 - 50	Motor, Ignition, Cruise Control
Sheet 6	51 - 60	Instruments, Sender, Central Informer
Sheet 7	61 - 70	Seats
Sheet 8	71 - 80	Rear Spoiler, Two-Tone Horns, Wipe- and Wash Cleaners
Sheet 9	81 - 90	Radio
Sheet 10	91 - 100	Fog Light, Rear Fog Light
Sheet 11		Central Electric
Sheet 12		Construction Components
Sheet 13		Plug Connections and Ground Points

LIGHTS

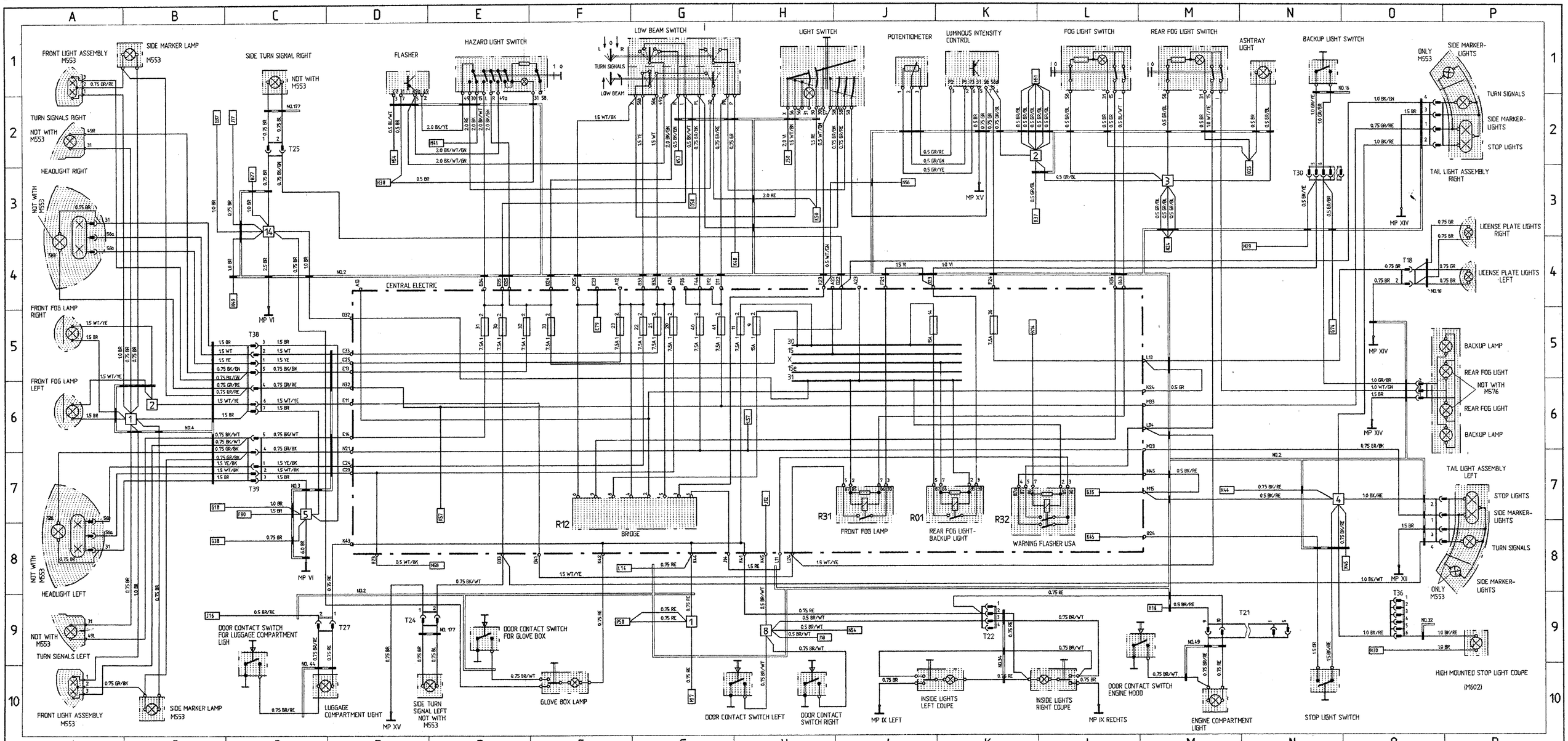

BK = BLACK WT = WHITE RE = RED GN = GREEN YE = YELLOW GR = GREY BR = BROWN BL = BLUE VI = VIOLET

SEATS, ALARM SYSTEM, CENTRAL LOCKS, MIRROR, POWER WINDOW REGULATOR

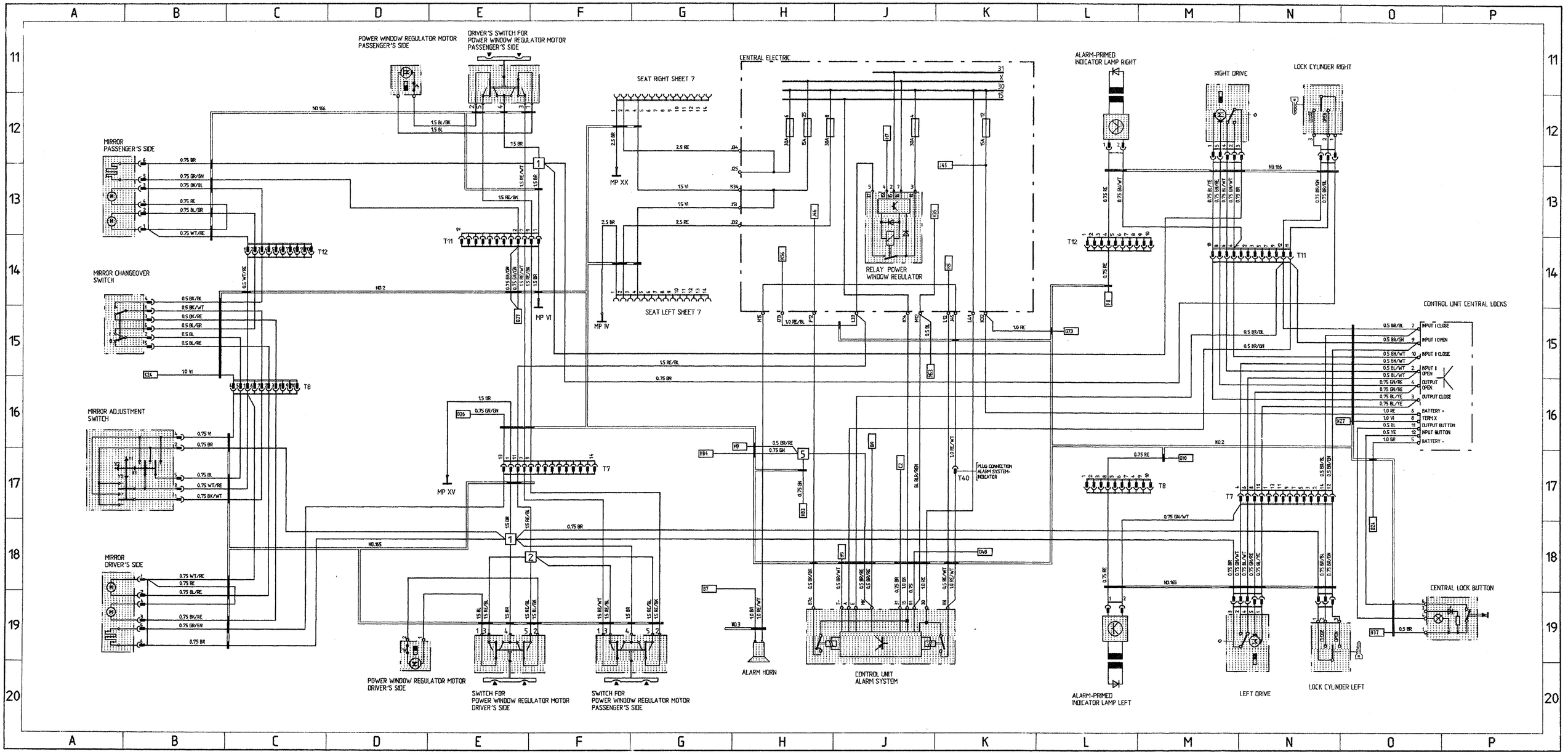

BK = BLACK WT = WHITE RE = RED GN = GREEN YE = YELLOW GR = GREY BR = BROWN BL = BLUE VI = VIOLET

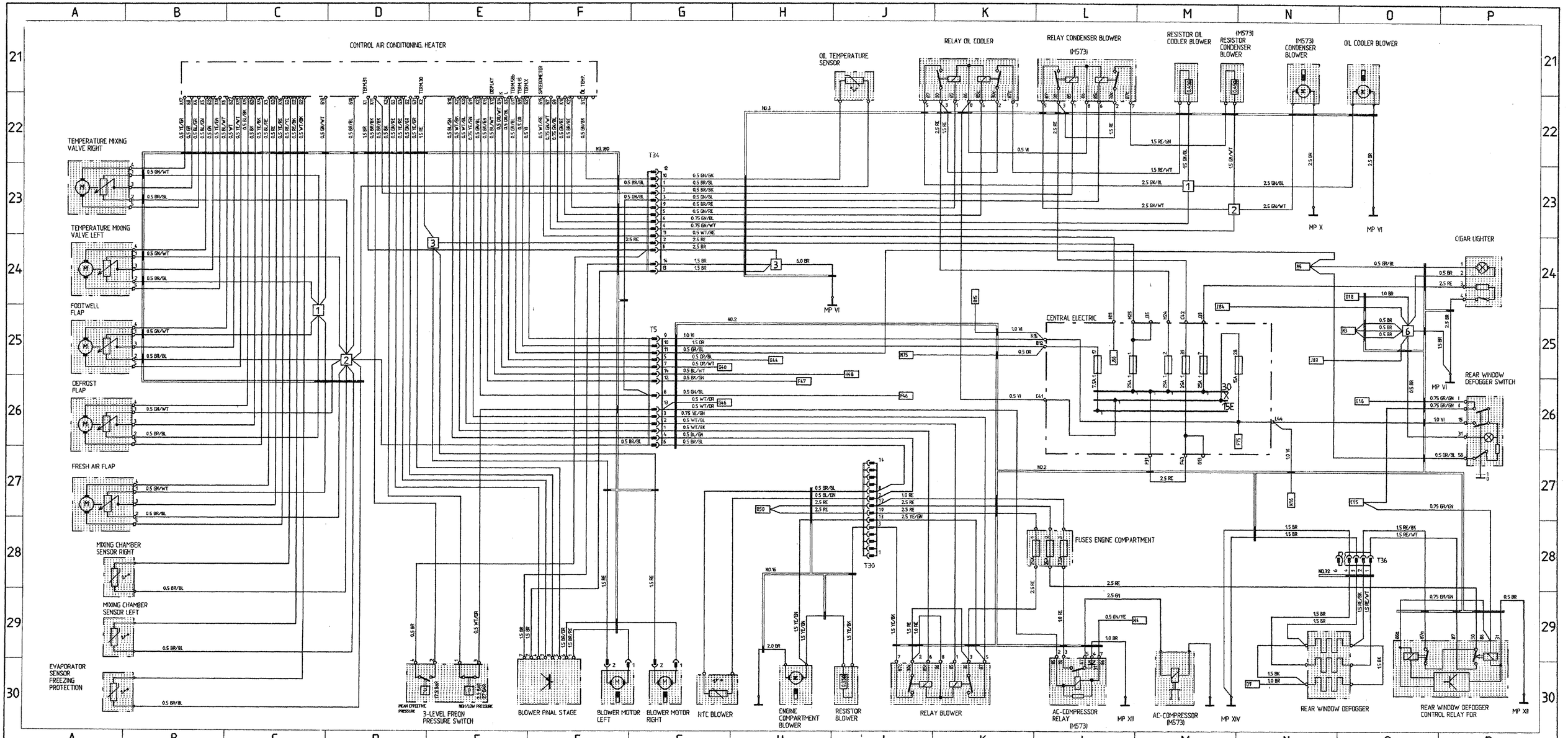

BK = BLACK WT = WHITE RE = RED GN = GREEN YE = YELLOW GR = GREY BR = BROWN

ABS, PORSCHE DYNAMIC AWD CONTROL

ABS HYDRAULIC UNIT

LOCKING DIFFERENTIAL VALVES TRANSVERSE LONGITUDINAL

PRESSURE WARNING SWITCH

ABS CONTROL UNIT

ABS-SAFETY LAMP

DIFFERENTIAL WARNING LAMP

STOP LIGHT-SWITCH

TERM.61

DIFFERENTIAL FUNCTION INDICATOR LAMP

TERM.30 ADDITIONAL CONTROL UNIT REAR SPOILER

MP X

MP II

MP XV

R51 PUMP RELAY BRAKE-AMPLIFIER

CENTRAL ELECTRIC

T2

COMBINATION LEAD

FRONT LEFT

FRONT RIGHT

REAR LEFT

REAR RIGHT

WHEEL SPEED SENSOR

LATERAL ACCELERATION SENDER

LONGITUDINAL ACCELERATION SENDER

DIFFERENTIAL CONTROL BUTTON BRIDGING

LOCKING DIFFERENTIAL CONTROL BUTTON

R34 ABS RELAY

BRAKE BOOSTER PUMP

LAMP CLUSTER, DASHBOARD MIDDLE

LAMP CLUSTER, DASHBOARD ABOVE

BK = BLACK WT = WHITE RE = RED GN = GREEN YE = YELLOW
GR = GREY BR = BROWN BL = BLUE VI = VIOLET

MOTOR, FUEL, IGNITION, CRUISE CONTROL

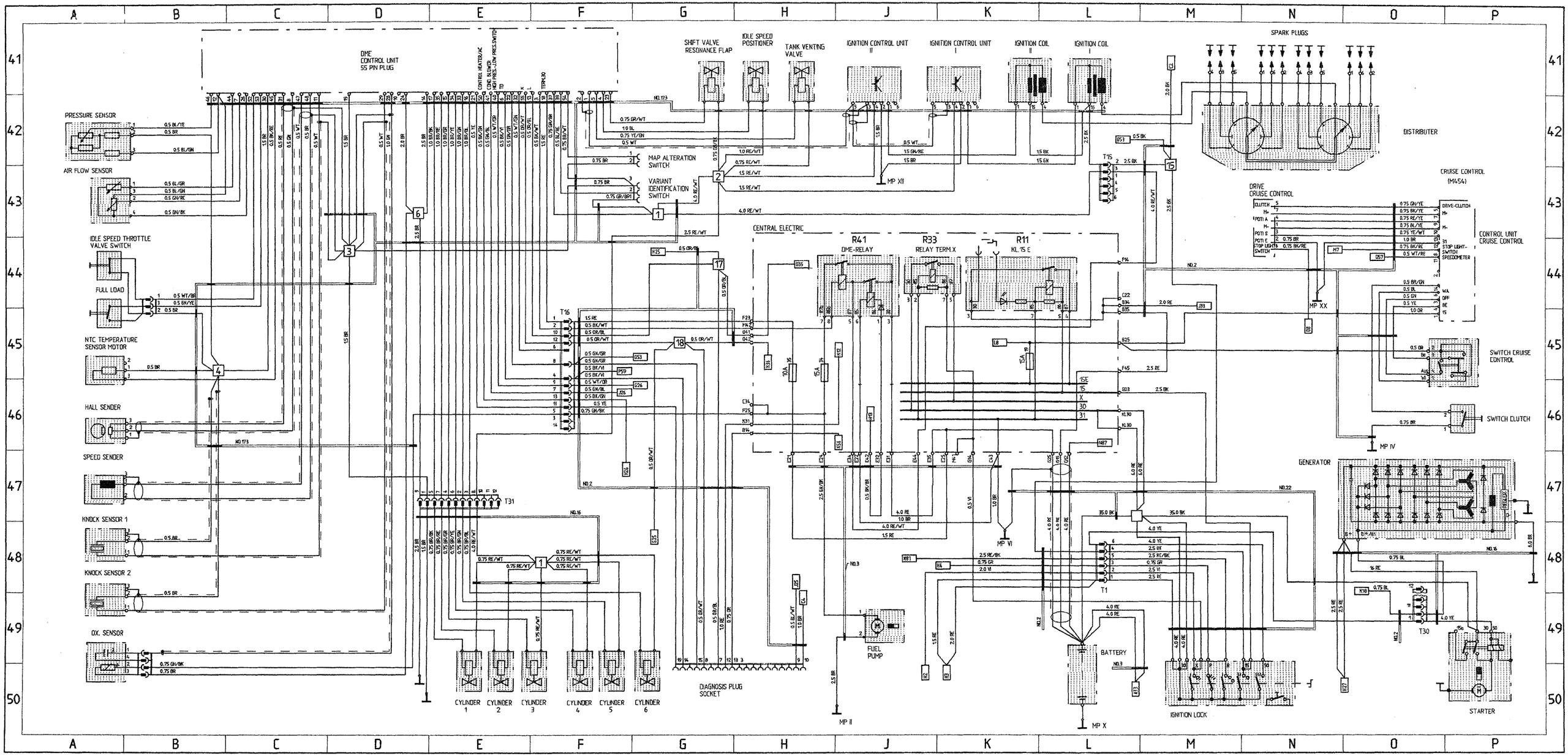

BK = BLACK WT = WHITE RE = RED GN = GREEN YE = YELLOW GR = GREY BR = BROWN BL = BLUE VI = VIOLET

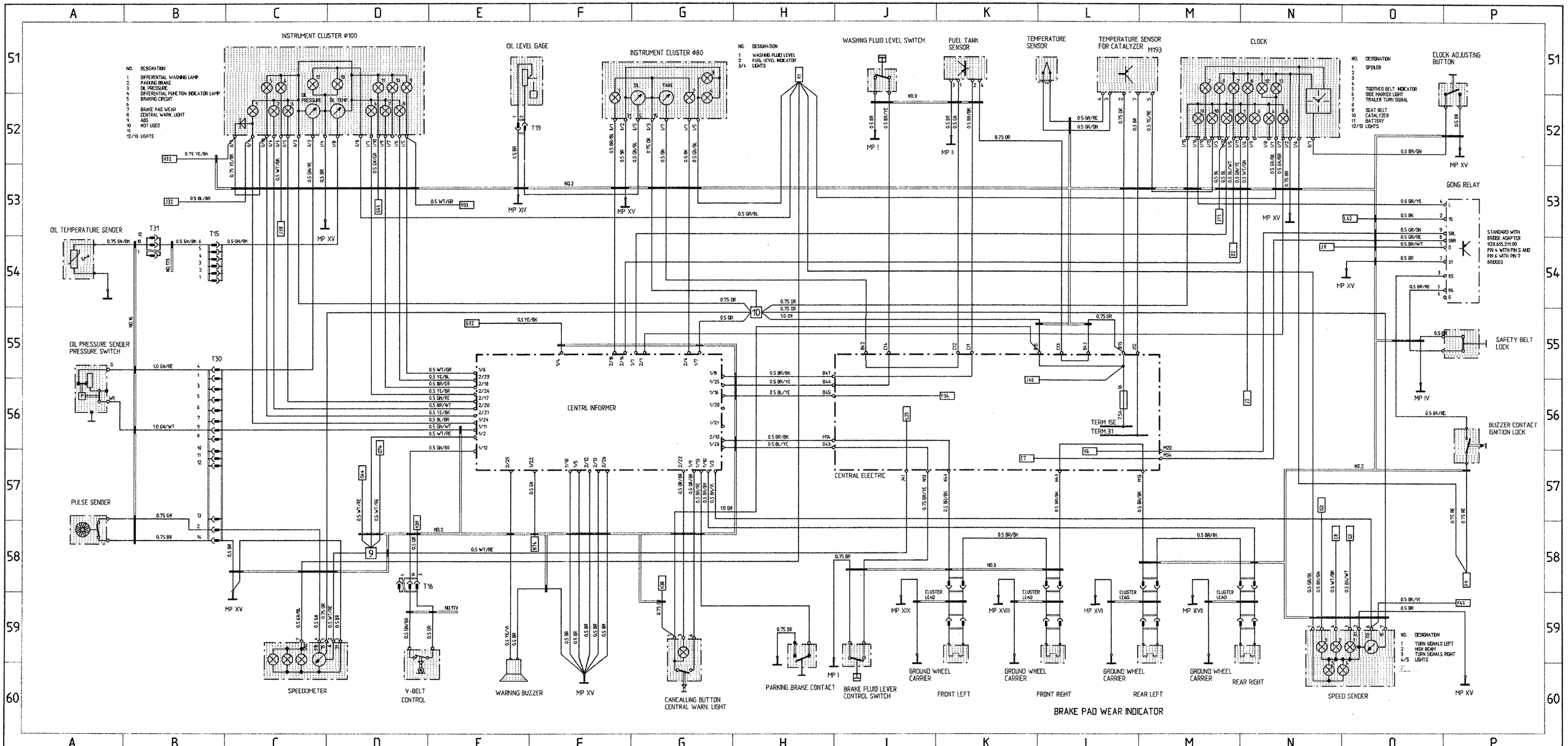
INSTRUMENT CLUSTER Φ100
INSTRUMENT CLUSTER Φ80
OIL LEVEL GAGE
WASHING FLUID LEVEL SWITCH
FUEL TANK SENSOR
TEMPERATURE SENSOR
TEMPERATURE SENSOR FOR CATALYZER M193
CLOCK
CLOCK ADJUSTING BUTTON
GONG RELAY
OIL TEMPERATURE SENDER
OIL PRESSURE SENDER PRESSURE SWITCH
PULSE SENDER
CENTRAL INFORMER
CENTRAL ELECTRIC
TERM.15E
TERM.31
SAFETY BELT LOCK
BUZZER CONTACT IGNITION LOCK
SPEEDOMETER
V-BELT CONTROL
WARNING BUZZER
CANCELLING BUTTON CENTRAL WARN. LIGHT
PARKING BRAKE CONTACT
BRAKE FLUID LEVEL CONTROL SWITCH
GROUND WHEEL CARRIER FRONT LEFT
GROUND WHEEL CARRIER FRONT RIGHT
GROUND WHEEL CARRIER REAR LEFT
GROUND WHEEL CARRIER REAR RIGHT
SPEED SENDER
BRAKE PAD WEAR INDICATOR
STANDARD WITH BRIDGE ADAPTER 928.615.211.00 PIN 4 WITH PIN 5 AND PIN 6 WITH PIN 7 BRIDGED

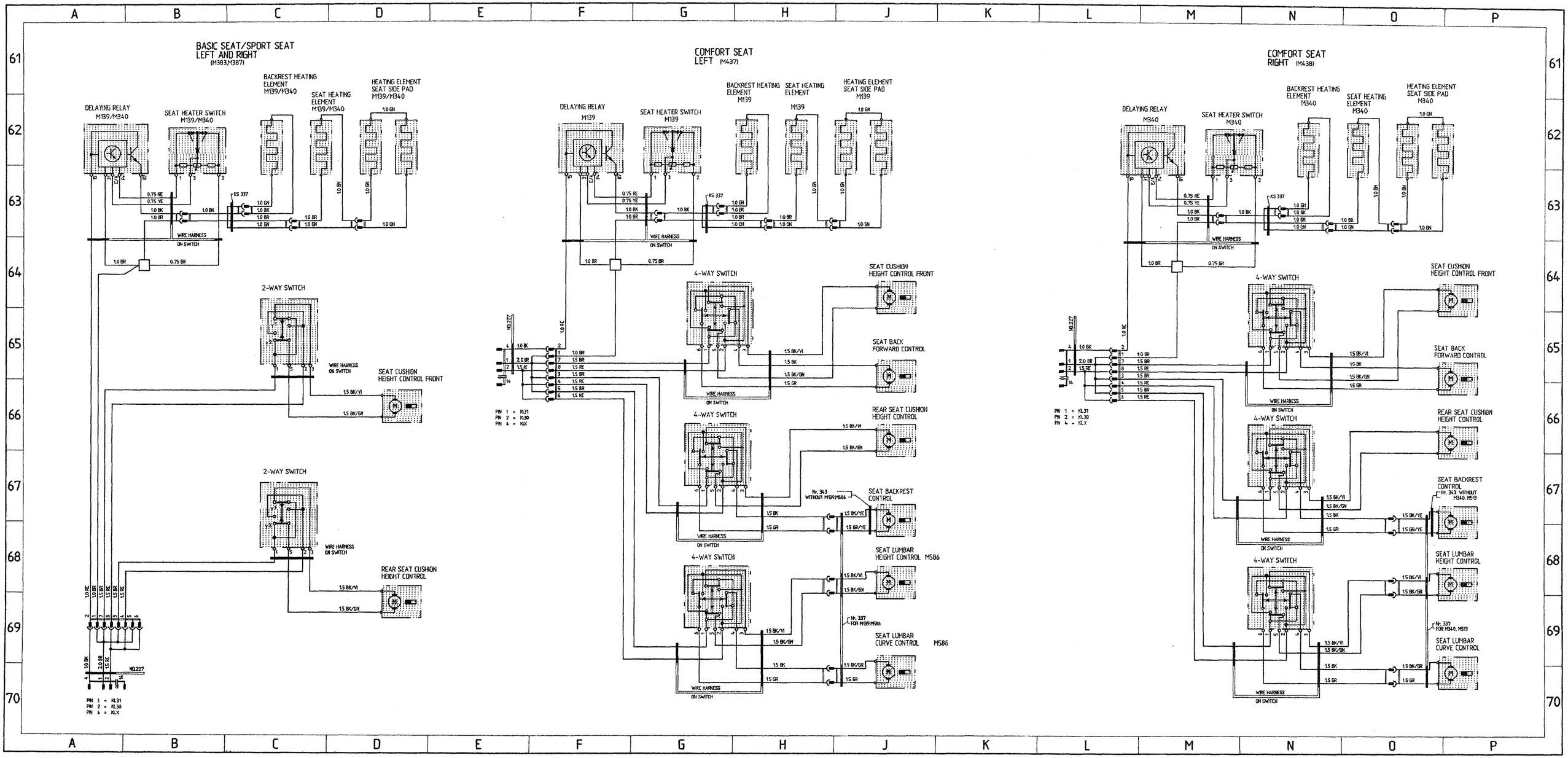

BK = BLACK WT = WHITE RE = RED GN = GREEN YE = YELLOW GR = GREY BR = BROWN BL = BLUE

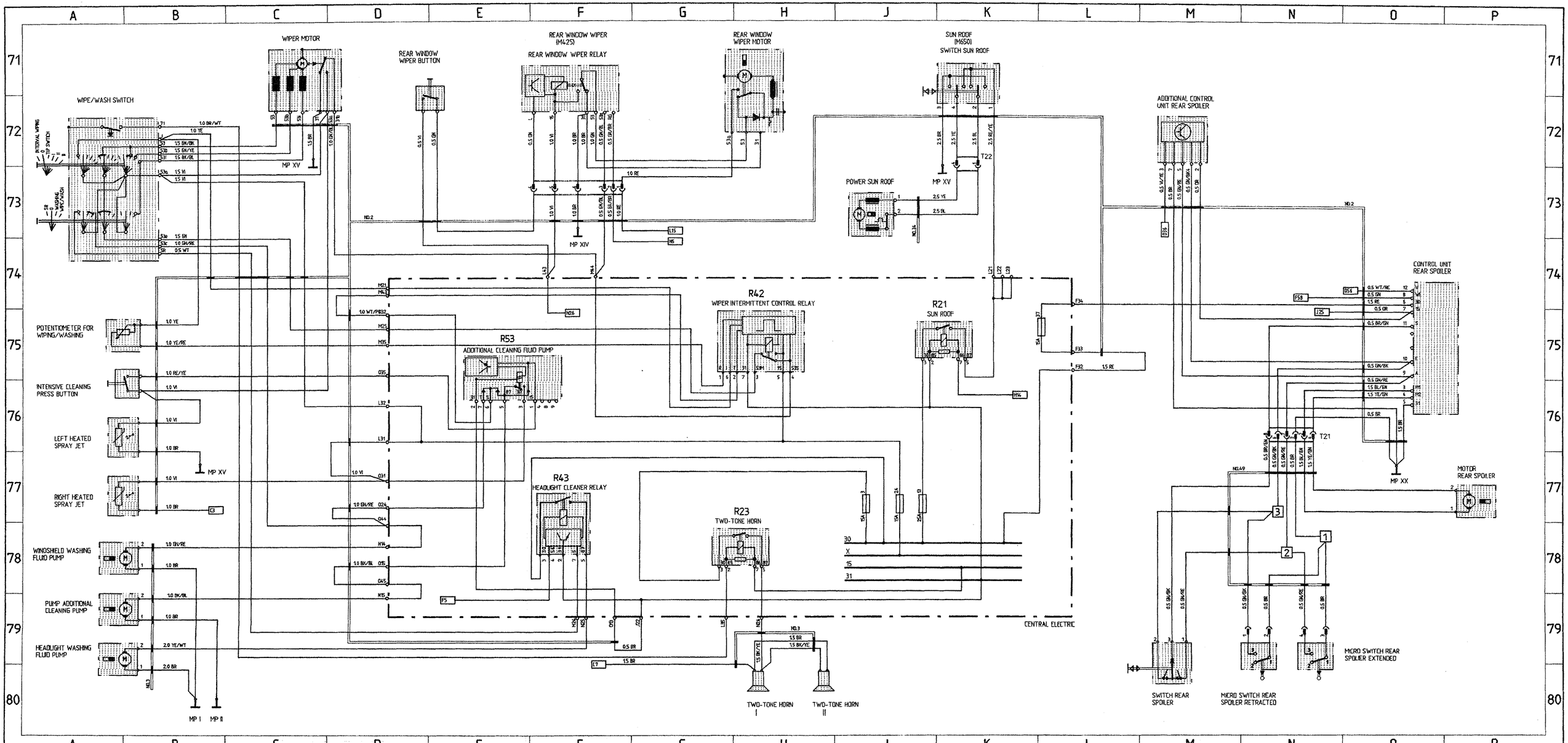

Printed in Germany

97-17

BK = BLACK WT = WHITE RE = RED GN = GREEN YE = YELLOW GR = GREY BR = BROWN BL = BLUE VI = VIOLET

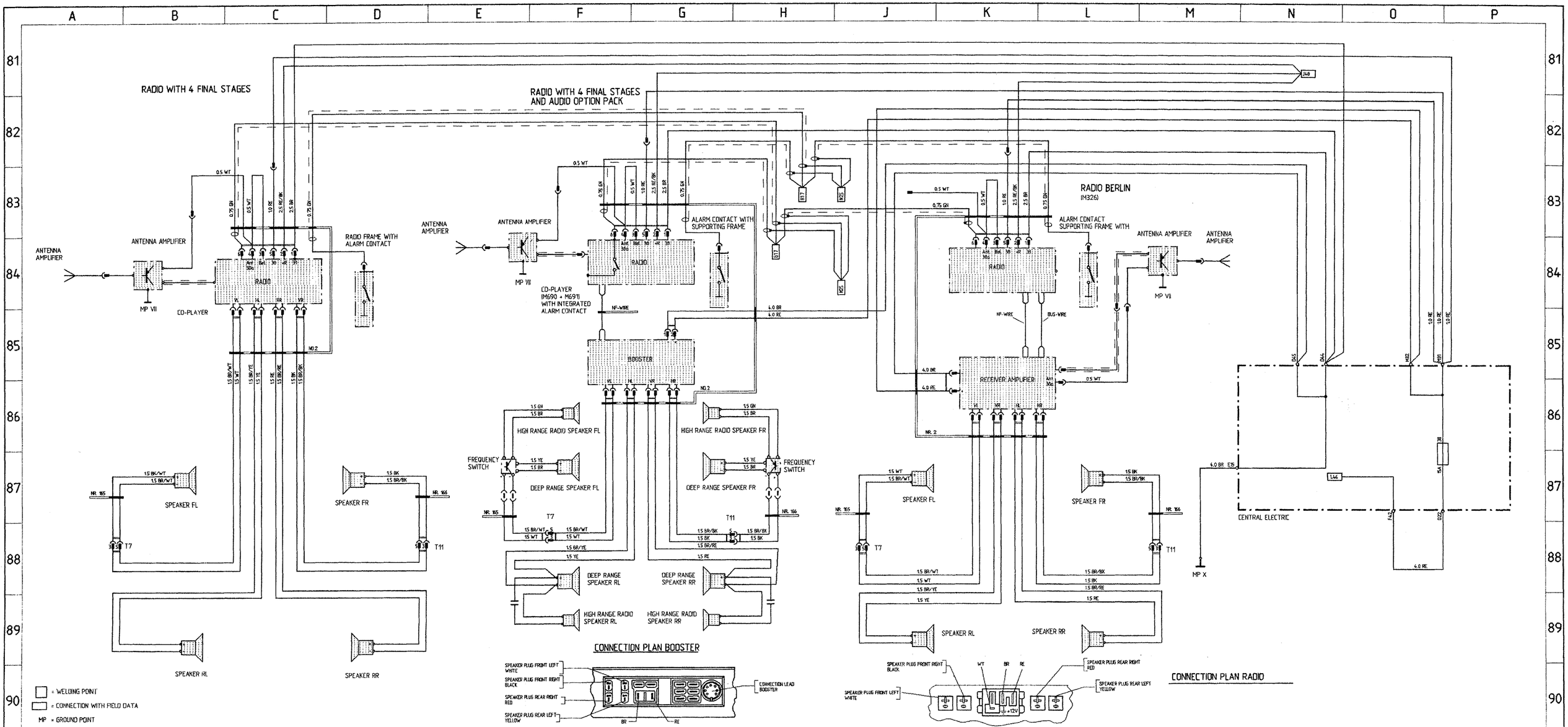
RADIO WITH 4 FINAL STAGES
RADIO WITH 4 FINAL STAGES AND AUDIO OPTION PACK
RADIO BERLIN (M326)
ANTENNA AMPLIFIER
RADIO
RADIO FRAME WITH ALARM CONTACT
ALARM CONTACT WITH SUPPORTING FRAME
MP VII
CD-PLAYER
CD-PLAYER (M690 + M691) WITH INTEGRATED ALARM CONTACT
BOOSTER
RECEIVER AMPLIFIER
HIGH RANGE RADIO SPEAKER FL
HIGH RANGE RADIO SPEAKER FR
DEEP RANGE SPEAKER FL
DEEP RANGE SPEAKER FR
FREQUENCY SWITCH
DEEP RANGE SPEAKER RL
DEEP RANGE SPEAKER RR
HIGH RANGE RADIO SPEAKER RL
HIGH RANGE RADIO SPEAKER RR
SPEAKER FL
SPEAKER FR
SPEAKER RL
SPEAKER RR
CENTRAL ELECTRIC
MP X
CONNECTION PLAN BOOSTER
CONNECTION PLAN RADIO
= WELDING POINT
= CONNECTION WITH FIELD DATA
MP = GROUND POINT

FOG LIGHT- AND REAR FOG LIGHT-GEARSHIFT MECHANISM

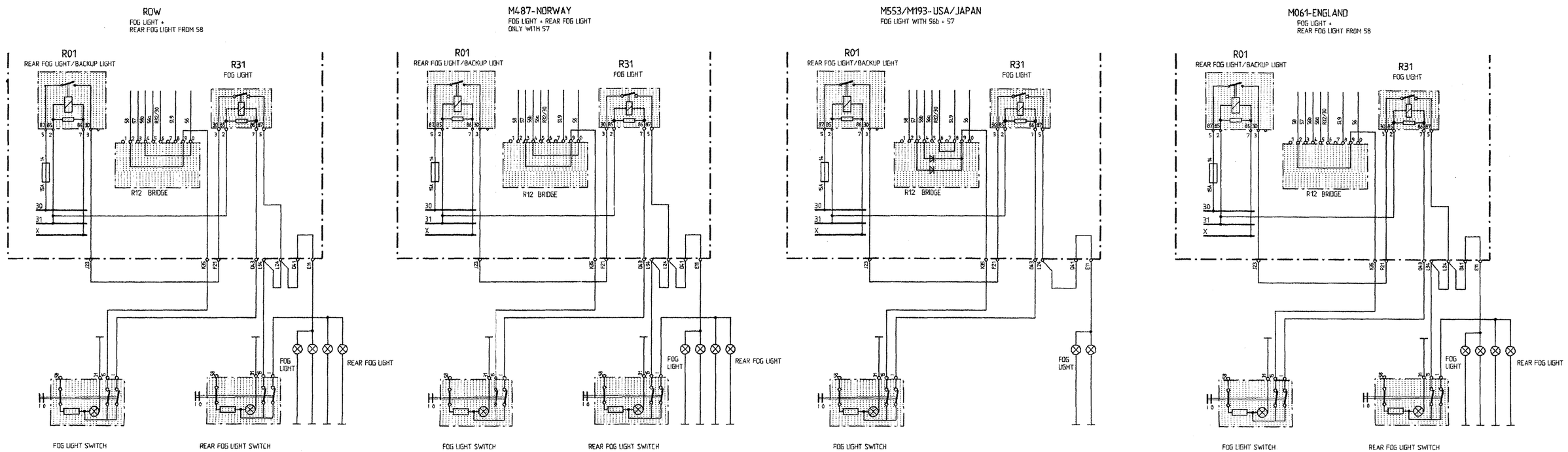

BK = BLACK WT = WHITE RE = RED GN = GREEN YE = YELLOW GR = GREY BR = BROWN BL = BLUE

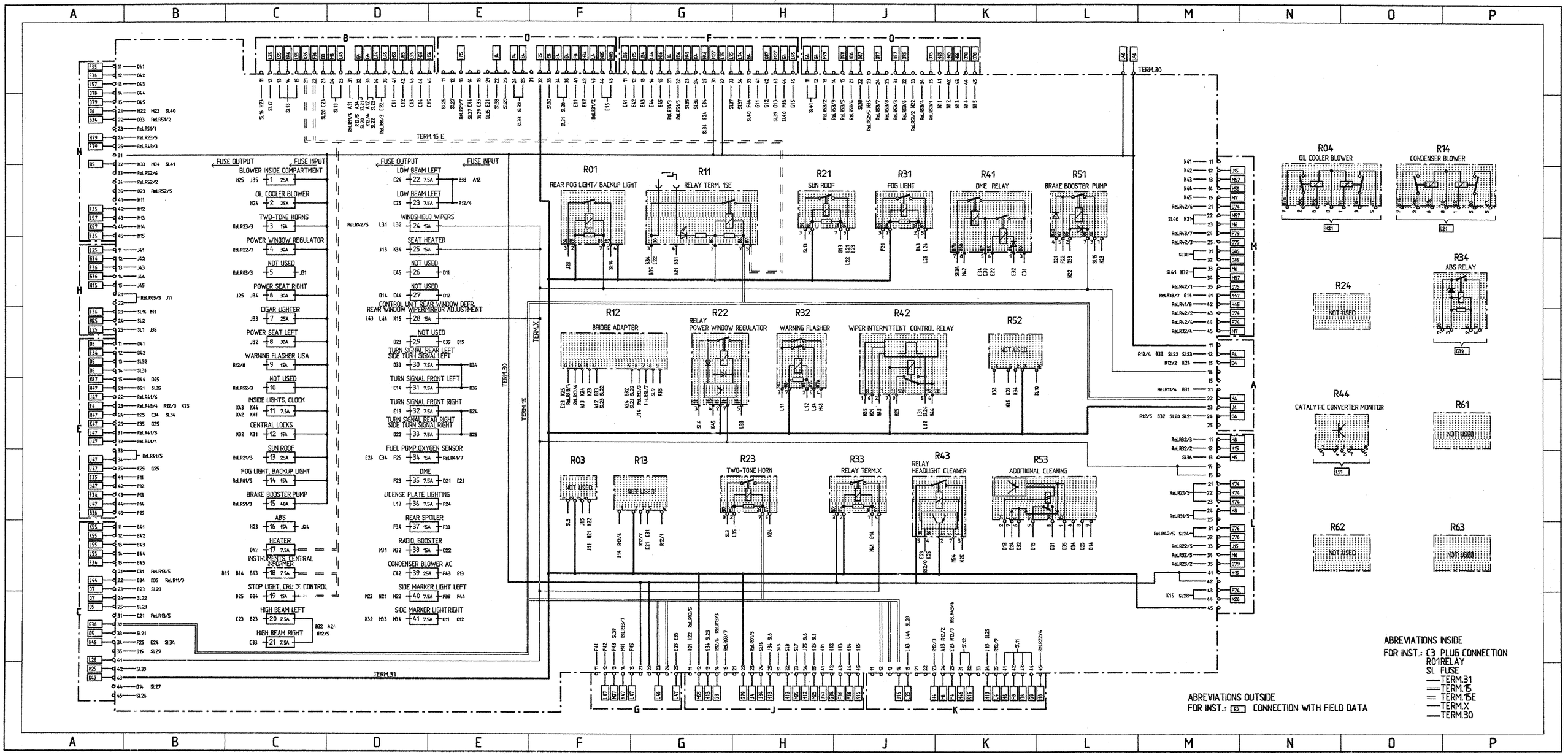
R01
REAR FOG LIGHT/ BACKUP LIGHT
R11
RELAY TERM. 15E
R21
SUN ROOF
R31
FOG LIGHT
R41
DME RELAY
R51
BRAKE BOOSTER PUMP
R04
OIL COOLER BLOWER
R14
CONDENSER BLOWER
R34
ABS RELAY
R24
NOT USED
R44
CATALYTIC CONVERTER MONITOR
R61
NOT USED
R62
NOT USED
R63
NOT USED
R12
BRIDGE ADAPTER
R22
RELAY POWER WINDOW REGULATOR
R32
WARNING FLASHER
R42
WIPER INTERMITTENT CONTROL RELAY
R52
NOT USED
R03
NOT USED
R13
NOT USED
R23
TWO-TONE HORN
R33
RELAY TERM.X
R43
RELAY HEADLIGHT CLEANER
R53
ADDITIONAL CLEANING
FUSE OUTPUT
FUSE INPUT
BLOWER INSIDE COMPARTMENT
OIL COOLER BLOWER
TWO-TONE HORNS
POWER WINDOW REGULATOR
NOT USED
POWER SEAT RIGHT
CIGAR LIGHTER
POWER SEAT LEFT
WARNING FLASHER USA
NOT USED
INSIDE LIGHTS, CLOCK
CENTRAL LOCKS
SUN ROOF
FOG LIGHT, BACKUP LIGHT
BRAKE BOOSTER PUMP
ABS
HEATER
INSTRUMENTS CENTRAL VOLTAGE CONVERTER
STOP LIGHT, CRUISE CONTROL
HIGH BEAM LEFT
HIGH BEAM RIGHT
LOW BEAM LEFT
LOW BEAM LEFT
WINDSHIELD WIPERS
SEAT HEATER
NOT USED
NOT USED
CONTROL UNIT REAR WINDOW DEFR. REAR WINDOW WIPER/MIRROR ADJUSTMENT
NOT USED
TURN SIGNAL REAR LEFT SIDE TURN SIGNAL LEFT
TURN SIGNAL FRONT LEFT
TURN SIGNAL FRONT RIGHT
TURN SIGNAL REAR RIGHT SIDE TURN SIGNAL RIGHT
FUEL PUMP,OXYGEN SENSOR
DME
LICENSE PLATE LIGHTING
REAR SPOILER
RADIO BOOSTER
CONDENSER BLOWER AC
SIDE MARKER LIGHT LEFT
SIDE MARKER LIGHT RIGHT
TERM.15 E
TERM.30
TERM.X
TERM.15
TERM.31
ABREVIATIONS INSIDE
FOR INST.: C3 PLUG CONNECTION
R01 RELAY
SI. FUSE
TERM.31
TERM.15
TERM.15E
TERM.X
TERM.30
ABREVIATIONS OUTSIDE
FOR INST.: E2 CONNECTION WITH FIELD DATA

CONSTRUCTION COMPONENTS

DESIGNATION, FUNCTION	POSITION IN VEHICLE LHD	NOTE	FIELD IN WIRE DIAGRAM
ABS RELAY	6cM	CENTRAL ELECTRIC	G39/40
ALARM HORN	3cL	IN WHEEL HOUSING FRONT RIGHT	H19
ANTENNA AMPLIFIER	7bL	IN LUGGAGE COMPARTMENT	B84,E84,M84
FLASHER	7dN	IN CENTRE CONSOLE	D1
BOOSTER	9eM	UNDER THE SEAT RIGHT	G85
DIAGNOSIS PLUG SOCKET	7cL	IN PASSENGER'S FOOTWELL	G/H50
DME RELAY	6cM	CENTRAL ELECTRIC	J44
DME CONTROL UNIT	9eP	UNDER THE SEAT LEFT	B-F41
SPEED SENDER	15cP	ON ENGINE LEFT	A47
THROTTLE VALVE SWITCH	15bN	ON THROTTLE VALVE ASSEMBLY	A44/45
PRESSURE SENSOR	10eP	UNDER THE SEAT LEFT	A42
PRESSURE WARNING SWITCH	1dO	IN LUGGAGE COMPARTMENT	F31
PRESSURE SWITCH AIR CONDITIONING SYSTEM	6bO	IN LUGGAGE COMPARTMENT	E30
RECEIVER FOR RADIO BERLIN	9eM	UNDER THE SEAT RIGHT	K86
TWO-TONE HORN	3cL	IN WHEEL HOUSING FRONT RIGHT	H80
TWO-TONE HORN	3cL	IN WHEEL HOUSING FRONT RIGHT	H80
FREQUENCY SWITCH FRONT LEFT	9dQ	UNDER THE DOOR TRIM PANEL	E87
FREQUENCY SWITCH FRONT RIGHT	9dL	UNDER THE DOOR TRIM PANEL	H87
BLOWER FINAL STAGE	6bN	IN LUGGAGE COMPARTMENT	F30
BLOWER MOTOR RIGHT	6cM	IN LUGGAGE COMPARTMENT	G30
BLOWER MOTOR LEFT	6cP	IN LUGGAGE COMPARTMENT	F30
GONG RELAY	6cP	ON STEERING COLUMN LEFT	P53/54
HALL SENDER	17cO	ON DISTRIBUTOR	A46
SWITCH REAR SPOILER	17cO	ON TAILGATE	M79
REAR WINDOW WIPER RELAY	15bO	ON REAR WINDOW WIPER MOTOR	F71
HYDRAULIC UNIT ABS	3dP	IN LUGGAGE COMPARTMENT	C32
PULSE SENDER	13dO	ON GEARBOX	A58
MAP ALTERATION- SWITCH	9eP	UNDER THE SEAT LEFT	G42
KNOCK SENSOR1	15cP	ON ENGINE LEFT	A48
KNOCK SENSOR2	16cN	ON ENGINE ABOVE	A49
CONDENSER BLOWER	2dQ	IN WHEEL HOUSING FRONT LEFT	N21
FUEL PUMP	6eM	BEHIND THE BASE	J49
LOCKING DIFFERENTIAL VALVES, LONGITUDINAL	3dM	IN LUGGAGE COMPARTMENT	E31
IDLE SPEED POSITIONER	15bN	ENGINE COMPARTMENT	H41
MICRO SWITCH REAR SPOILER EXTENDED	16bP	ON TAILGATE	N79
MICRO SWITCH REAR SPOILER RETRACTED	16bP	ON TAILGATE	N79
MOTOR SUN ROOF	12aN	IN ROOF	J73
NTC HEATER FAN	16cP	ENGINE COMPARTMENT	G30
OIL PRESSURE SENDER	14cN	ON ENGINE	A55/56
OIL PRESSURE SWITCH	14cN	ON ENGINE	A55/56
OIL COOLER BLOWER	2dL	IN WHEEL HOUSING FRONT RIGHT	D21
OIL LEVEL GAGE	12cK	IN WHEEL HOUSING REAR RIGHT	E/F51/52
OIL TEMPERATURE SENDER	14cN	ON ENGINE	A54
BRAKE BOOSTER PUMP	1dO	IN LUGGAGE COMPARTMENT	H39/40
LOCKING DIFFERENTIAL VALVES, TRANSVERSE	3dM	IN LUGGAGE COMPARTMENT	E31

CONSTRUCTION COMPONENTS

DESIGNATION, FUNCTION	POSITION IN VEHICLE LHD	NOTE	FIELD IN WIRE DIAGRAM
CONTROL RELAY REAR WINDOW DEFOGGER	16cP	CARRIER PLATE IN ENGINE COMPARTMENT	O/P29/30
RELAY CONDENSER BLOWER	6cM	CENTRAL ELECTRIC	L21
RELAY AC COMPRESSOR	16cP	CARRIER PLATE IN ENGINE COMPARTMENT	L30
RELAY ALARM SYSTEM USA	6cM	CENTRAL ELECTRIC	K/L7
RELAY TWO-TONE HORN	6cM	CENTRAL ELECTRIC	G/H78
RELAY POWER WINDOW REGULATOR	6cM	CENTRAL ELECTRIC	J13/14
RELAY BLOWER	16cP	CARRIER PLATE IN ENGINE COMPARTMENT	J/K30
RELAY ADDITIONAL CLEANING FLUID PUMP	6cM	CENTRAL ELECTRIC	E75/76
RELAY CATALYZER	6cM	CENTRAL ELECTRIC	L/M51
RELAY TERM.X	6cM	CENTRAL ELECTRIC	K44
RELAY TERM.15 E	6cM	CENTRAL ELECTRIC	K/L44
RELAY REAR FOG LIGHT- BACKUP LIGHT	6cM	CENTRAL ELECTRIC	J/K7
RELAY FRONT FOG LAMP	6cM	CENTRAL ELECTRIC	J7
RELAY OIL COOLER BLOWER	6cM	CENTRAL ELECTRIC	K21
RELAY BRAKE BOOSTER PUMP	6cM	CENTRAL ELECTRIC	H34/35
RELAY SUN ROOF	6cM	CENTRAL ELECTRIC	J/K75
BACKUP LIGHT SWITCH	14dN	ON GEARBOX RIGHT	N1
SHIFT VALVE RESONANCE FLAP	15bN	ON ENGINE	G41
WINDSHIELD WASHING FLUID PUMP	3cQ	ON WINDSHIELD WASHER TANKIN WHEEL HOUSING FRONT LEFT-	A78
FUSES ENGINE COMPARTMENT	16cP	CARRIER PLATE IN ENGINE COMPARTMENT	L28
HEADLIGHT CLEANER PUMP	3cQ	ON WINDSHIELD WASHER TANKIN WHEEL HOUSING FRONT LEFT	A79/80
HEADLIGHT CLEANER RELAY	6cM	CENTRAL ELECTRIC	F77/78
STARTER	14dN	ON CLUTCH BELL HOUSING RIGHT	P49/50
DRIVE CRUISE CONTROL	15cO	ON ENGINE	N43/44
CONTROL UNIT ABS	2dM	IN LUGGAGE COMPARTMENT	A33-38
CONTROL UNIT ALARM SYSTEM	7bL	IN LUGGAGE COMPARTMENT	J19
CONTROL UNIT INSTRUMENT LIGHTS	7bQ	IN LUGGAGE COMPARTMENT LEFT	K1
CONTROL UNIT REAR SPOILER	9eN	UNDER THE SEAT RIGHT	D74-76
CONTROL UNIT HEATER, AIR CONDITIONER	7cO	ON INTRUMENT PANEL	B-F21
CONTROL UNIT CRUISE CONTROL	9eN	UNDER THE SEAT RIGHT	P43/44
CONTROL UNIT CENTRAL LOCKS	6cN	UNDER THE INSTRUMENT PANEL	P15/16
BUZZER CONTACT	7cP	ON IGNITION LOCK	P56
FUEL LEVEL SENDER	5cM	IN FUEL TANK	K51
TANK VENTING VALVE	15cN	ON ENGINE ABOVE	H41
TEMPERATURE MOTOR	15cP	ON ENGINE LEFT	A45
VARIANT IDENTIFICATION SWITCH	9eP	UNDER THE SEAT LEFT	G43
RESISTOR BLOWER	16dP	ENGINE COMPARTMENT	J30
RESISTOR CONDENSER BLOWER	2dQ	IN WHEEL HOUSING FRONT LEFT	M21
RESISTOR OIL COOLER BLOWER	2dL	IN WHEEL HOUSING FRONT RIGHT	M21
WARNING BUZZER	7cP	ON INTRUMENT PANEL	E60
WIPER INTERMITTENT CONTROL RELAY	6cM	CENTRAL ELECTRIC	H75
CENTRAL ELECTRIC	6cM	IN LUGGAGE COMPARTMENT	---
CENTRL INFORMER	6cP	ON STEERING COLUMNLEFT	F56
IGNITION CONTROL UNIT I	15cP	ENGINE COMPARTMENT LEFT	K41
IGNITION CONTROL UNIT II	15cP	ENGINE COMPARTMENT LEFT	J41
IGNITION COILI	15cQ	ENGINE COMPARTMENT LEFT	L41
IGNITION COILII	15cQ	ENGINE COMPARTMENT LEFT	K41
ADDITIONAL CLEANING FLUID PUMP	4cM	IN LUGGAGE COMPARTMENT	A79

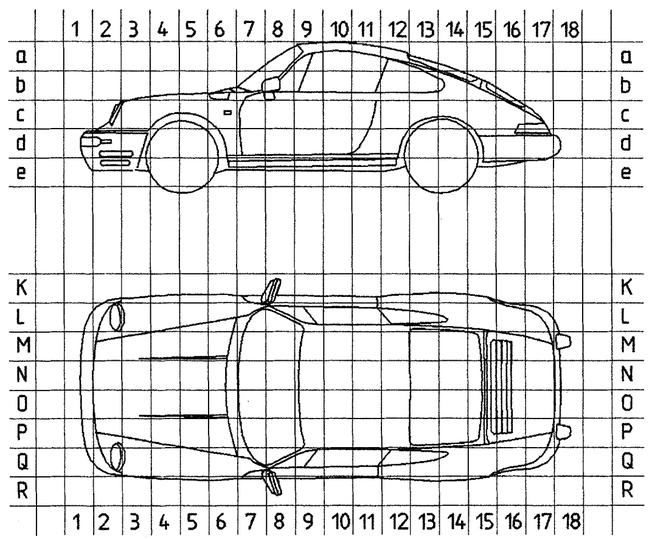

911 Carrera 4 Model 89 Sheet 13

PLUG CONNECTIONS AND GROUND POINTS

PLUG CONNECTIONS

CODE	NUMBER OF PINS	DESIGNATION, FUNCTION	POSITION IN VEHICLE LHD	NOTE	FIELD
T1	6	IGNITION LOCK	6cP	ON STEERING COLUMN LEFT	L48
T2	10	ABS	6cL	IN LUGGAGE COMPARTMENT RIGHT	C36/37
T5	14	HEATER, AIR CONDITIONER	6cM	UNDER THE INSTRUMENT PANEL RIGHT	G25/26
T7	14	DOOR DRIVER'S SIDE	6cQ	UNDER THE INSTRUMENT PANEL LEFT	N17,A88,F88,J88
T8	10	DOOR DRIVER'S SIDE	6cQ	UNDER THE INSTRUMENT PANEL LEFT	C16,E/F17,L17
T11	12	DOOR PASSENGER'S SIDE	6cL	UNDER THE INSTRUMENT PANEL RIGHT	E14,M/N14,D88,H88,M88
T12	10	DOOR PASSENGER'S SIDE	6cL	UNDER THE INSTRUMENT PANEL RIGHT	C14,L/M14
T15	6	DME	9eP	UNDER THE SEAT LEFT	L43/B54
T16	14	DME	9eP	UNDER THE SEAT LEFT	F45/46,D58
T18	2	LICENSE PLATE LIGHTS	17dL	TAIL LIGHTS RIGHT	D4
T19	2	OIL LEVEL GAGE	15cM	ENGINE COMPARTMENT RIGHT	E52
T21	10	TAILGATE	15cL	ENGINE COMPARTMENT RIGHT	M/N9,N76
T22	4	INSIDE LIGHTS, SUN ROOF	15bM	BELOW THE PARCEL TRAY	K9,K72
T24	2	SIDE TURN SIGNAL LEFT	7bQ	IN LUGGAGE AT THE LONGITUDINAL SUPPORT LEFT	D/E9
T25	2	SIDE TURN SIGNAL RIGHT	7bL	IN LUGGAGE AT THE LONGITUDINAL SUPPORT RIGHT	C2
T27	2	LUGGAGE COMPARTMENT LIGHT	7bL	IN LUGGAGE AT THE LONGITUDINAL SUPPORT RIGHT	C/D9
T30	14	NO. 16 MOTOR	16cP	CARRIER PLATE IN ENGINE COMPARTMENT	N/O3,J27/28,D48/49,B55-58
T31	12	MOTOR, DME	16cP	CARRIER PLATE IN ENGINE COMPARTMENT	D/E47,B54
T34	14	HEATER, AIR CONDITIONER	6cM	IN LUGGAGE COMPARTMENT RIGHT	G23/24
T36	6	REAR WINDOW	15bM	BELOW THE PARCEL TRAY	D9,D28
T38	7	NO.4, FRONT LIGHTS	3cL	IN WHEEL HOUSING FRONT RIGHT	C5/6
T39	5	NO.4, FRONT LIGHTS	3cL	IN WHEEL HOUSING FRONT RIGHT	C6/7
T40	1	ALARM SYSTEM INDICATOR	7bL	IN LUGGAGE COMPARTMENT	K17

GROUND POINTS

CODE	NOTE	POSITION IN VEHICLE LHD
MP I	LUGGAGE COMPARTMENT,WHEEL HOUSING LEFT	2cP
MP II	LUGGAGE COMPARTMENT,WHEEL HOUSING RIGHT	2cM
MP III	ON FIREWALL	—
MP IV	GROUND OF POWER CONSUMERS UNDER THE SEAT LEFT	11eP
MP V	ELECTRONIC UNDER THE SEAT LEFT	10eP
MP VI	CENTRAL ELECTRIC ON LONGITUDINAL SUPPORT RIGHT	6bL
MP VII	ANTENNA AMPLIFIER ON LONGITUDINAL SUPPORT RIGHT	7bL
MP VIII	INSIDE LIGHTS CONVERTIBLE ROOF, CENTER, FRONT	9aN
MP IX	INSIDE LIGHTS ROOF RIGHT	11aL
MP IX	INSIDE LIGHTS ROOF LEFT	11aP
MP X	BATTERY LUGGAGE COMPARTMENT LEFT	3eP
MP XI	GROUND STRAP STARTER TRANSMISSION MOTOR BODY	14cM
MP XII	ENGINE COMPARTMENT REAR LEFT	15cQ
MP XIII	MOTOR LEFT	15cQ
MP XIV	ENGINE COMPARTM. REAR RIGHT	15cL
MP XV	INSTRUMENT LONGITUDINAL SUPPORT LEFT	7bQ
MP XVI	COMBINATION LEAD REAR LEFT	13dP
MP XVII	COMBINATION LEAD REAR RIGHT	12dM
MP XVIII	COMBINATION LEAD FRONT RIGHT	4cM
MP XIX	COMBINATION LEAD FRONT LEFT	4cP
MP XX	SEAT CROSS MEMBER UNDER THE SEAT RIGHT	8eL

M - NUMBERS

M 139	ADJUSTABLE SEAT HEATING SEAT LEFT
M 193	JAPAN VERSION
M 326	RADIO BERLIN
M 340	ADJUSTABLE SEAT HEATING SEAT RIGHT
M 383	SPORT SEAT LEFT HEIGHT ELECTR. ADJUSTABLE
M 387	SPORT SEAT RIGHT HEIGHT ELECTR. ADJUSTABLE
M 425	REAR WINDOW WIPER
M 437	COMFORT SEAT LEFT
M 438	COMFORT SEAT RIGHT
M 454	CRUISE CONTROL
M 513	LUMBAR SUPPORT SEAT RIGHT
M 553	USA - CANADA VERSION
M 573	RELAY CONDENSER BLOWER
M 576	WITHOUT REAR FOG LIGHT
M 586	LUMBAR SUPPORT SEAT LEFT
M 602	HIGH MOUNTED STOP LIGHT
M 650	SUN ROOF

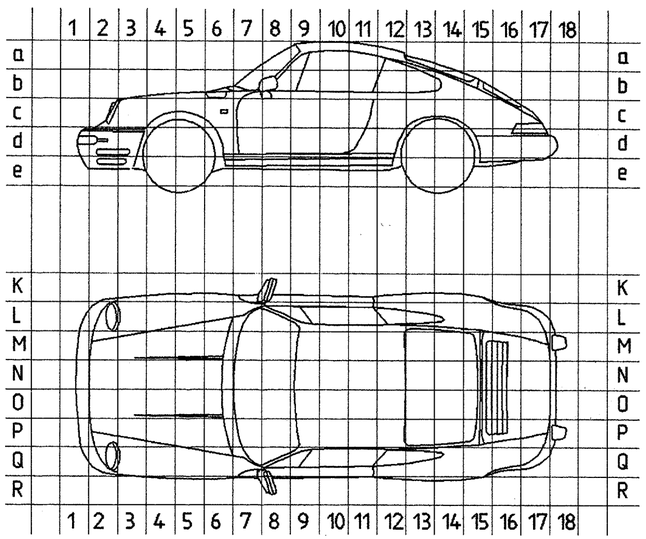

911 Carrera 4 Model 89

ADDITIONAL WIRE DIAGRAM TRAILER COUPLING

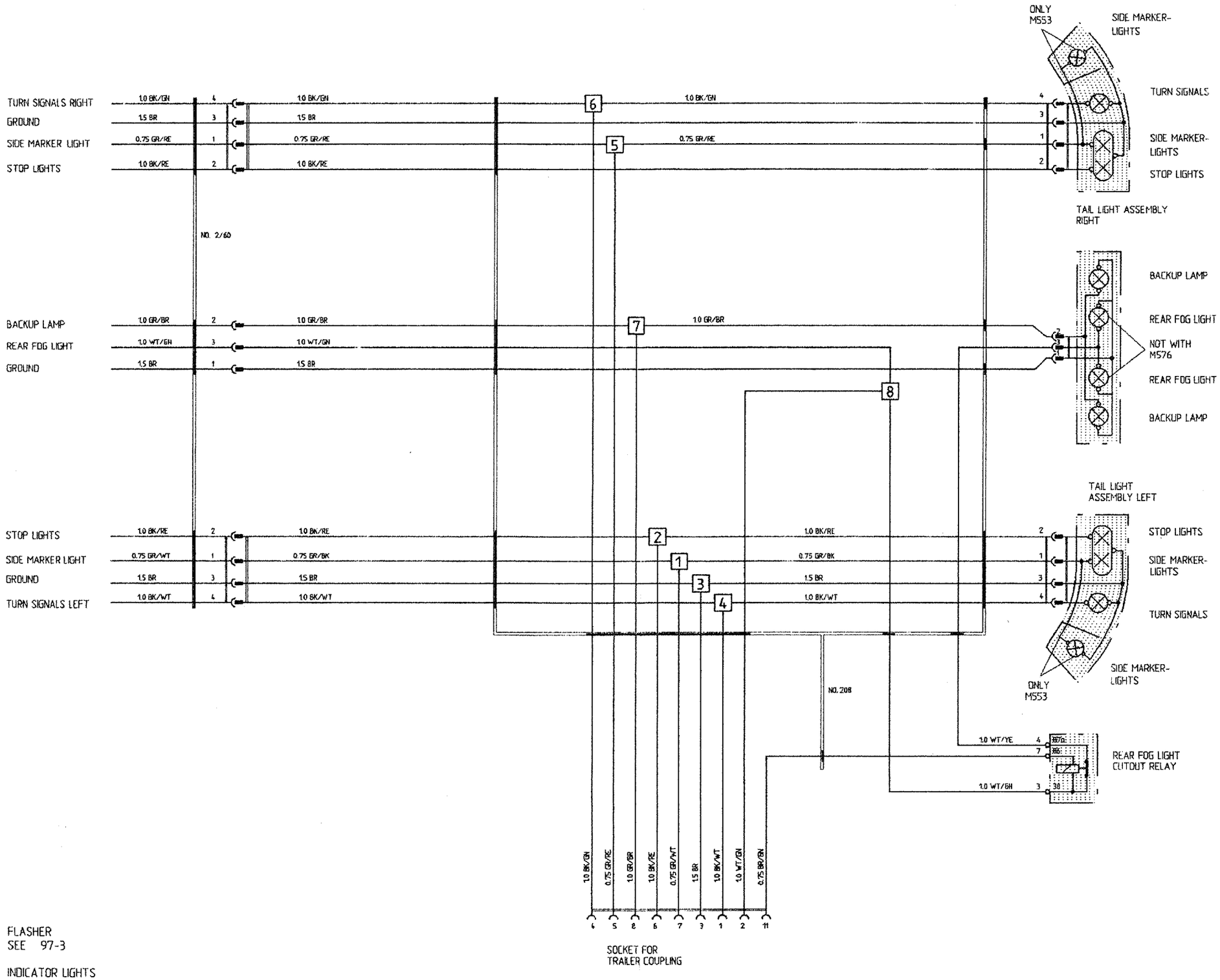

BK = BLACK GR = GREY WT = WHITE BR = BROWN RE = RED BL = BLUE GN = GREEN VI = VIOLET YE = YELLOW

Modifications in wiring diagram 911 Carrera 4 model 89

Sheet 3, K/L 28

The fuse for the engine compartment heating fan has been changed from 25 A to 30 A.
Please exchange sheet 11.

Please modify the wiring diagram accordingly.

Printed in Germany – IV, 1989

Wiring Diagram
Type 911Carrera 2 and 4
Model 90

	Coordinates	
Sheet 1	1 - 10	Lights
Sheet 2	11 - 20	Alarm System, Central Locks, Mirror, Power Window Regulator
Sheet 3	21 - 30	Heater, AC, Coolant Fan, Rear Window Defogger
Sheet 4	31 - 40	ABS, Porsche Dynamic AWD Control (Carrera 4)
Sheet 4a	31 - 40	ABS (Carrera 2)
Sheet 5	41 - 50	Motor, Ignition, Cruise Control
Sheet 6	51 - 60	Instruments, Sender, Central Informer
Sheet 7	61 - 70	Seats
Sheet 8	71 - 80	Rear Spoiler, Two-Tone Horns, Wipe- and Wash Cleaners, Sun Roof, Convertible Top
Sheet 9	81 - 90	Radio
Sheet 10	91 - 100	Fog Light, Rear Fog Light
Sheet 11		Central Electric
Sheet 12		Construction Components
Sheet 13		Plug Connections, Ground Points, M-Numbers
Sheet 14	101 - 110	Trailer Coupling
Sheet 15	111 - 120	Rev-meter, On-board computer, Airbag
Sheet 16	121 - 130	Tiptronic (Carrera 2)

Wiring Diagram
Type 911 Carrera 2 and 4
Model 90

The wiring diagram consists of *15 individual wiring diagrams*, 1 sheet *construction components* and 1 sheet *plug connections and ground points*. These are divided into coordinate fields.

Each individual wiring diagram contains a part of the central-electrics box in a dashdotted frame.

This part of the central-electrics box shows all the lines and relays necessary for the individual wiring diagram.

The earth/ground points are identified by "MP" and their location is shown in a vehicle diagram.

The 10-pin connectors on the central-electrics box are clipped together out of 3 parts, the 20-pin connectors are clipped together out of 5 parts.

Part 1, with the moduled-on fastening lug, is the "starting element".

Parts 2,3 and 4 are "module elements".

The 10-pin connectors only contents one "module element".

Start- and module elements are identified by the numbers 1.....5.

Part 5 ist a "coding element".

The designations of the plug connections in the wiring diagram refer to the "starting element" from, for example, B 11.....15, and to the first module element from B 21.....25.

Printed in Germany – IV, 1989

LIGHTS

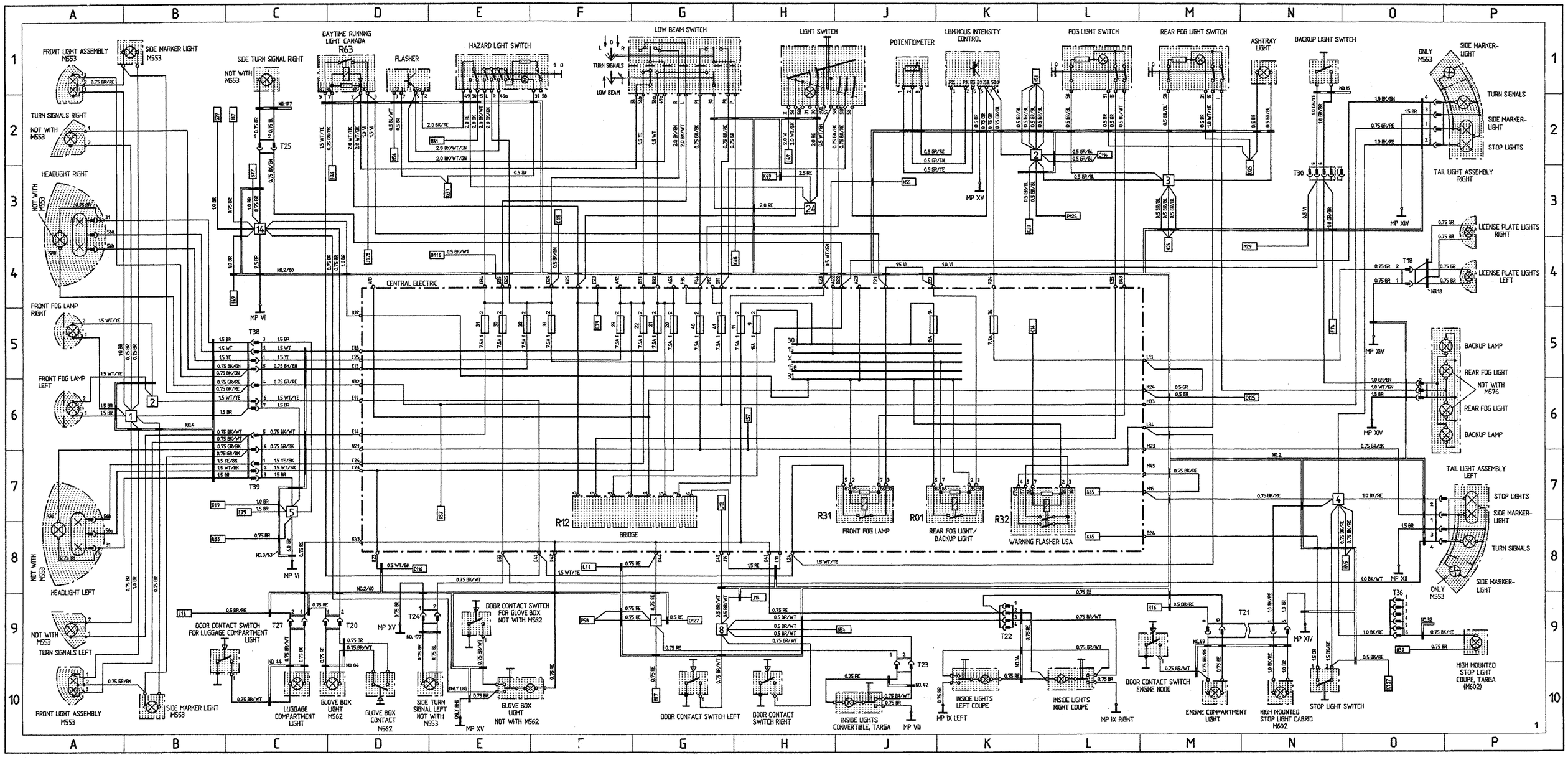
FRONT LIGHT ASSEMBLY M553
SIDE MARKER LIGHT M553
TURN SIGNALS RIGHT
NOT WITH M553
HEADLIGHT RIGHT
FRONT FOG LAMP RIGHT
FRONT FOG LAMP LEFT
HEADLIGHT LEFT
TURN SIGNALS LEFT
FRONT LIGHT ASSEMBLY M553
SIDE MARKER LIGHT M553
SIDE TURN SIGNAL RIGHT
NOT WITH M553
DAYTIME RUNNING LIGHT CANADA R63
FLASHER
HAZARD LIGHT SWITCH
LOW BEAM SWITCH
TURN SIGNALS
LOW BEAM
LIGHT SWITCH
POTENTIOMETER
LUMINOUS INTENSITY CONTROL
FOG LIGHT SWITCH
REAR FOG LIGHT SWITCH
ASHTRAY LIGHT
BACKUP LIGHT SWITCH
SIDE MARKER-LIGHT
ONLY M553
TURN SIGNALS
SIDE MARKER-LIGHT
STOP LIGHTS
TAIL LIGHT ASSEMBLY RIGHT
LICENSE PLATE LIGHTS RIGHT
LICENSE PLATE LIGHTS LEFT
CENTRAL ELECTRIC
BRIDGE
R12
R31
FRONT FOG LAMP
R01
REAR FOG LIGHT/ BACKUP LIGHT
R32
WARNING FLASHER USA
BACKUP LAMP
REAR FOG LIGHT
NOT WITH M576
REAR FOG LIGHT
BACKUP LAMP
TAIL LIGHT ASSEMBLY LEFT
STOP LIGHTS
SIDE MARKER-LIGHT
TURN SIGNALS
SIDE MARKER-LIGHT
ONLY M553
DOOR CONTACT SWITCH FOR LUGGAGE COMPARTMENT LIGHT
LUGGAGE COMPARTMENT LIGHT
GLOVE BOX LIGHT M562
GLOVE BOX CONTACT M562
SIDE TURN SIGNAL LEFT NOT WITH M553
DOOR CONTACT SWITCH FOR GLOVE BOX NOT WITH M562
GLOVE BOX LIGHT NOT WITH M562
DOOR CONTACT SWITCH LEFT
DOOR CONTACT SWITCH RIGHT
INSIDE LIGHTS CONVERTIBLE, TARGA
INSIDE LIGHTS LEFT COUPE
INSIDE LIGHTS RIGHT COUPE
DOOR CONTACT SWITCH ENGINE HOOD
ENGINE COMPARTMENT LIGHT
HIGH MOUNTED STOP LIGHT CABRIO M602
STOP LIGHT SWITCH
HIGH MOUNTED STOP LIGHT COUPE, TARGA (M602)

911 Carrera 2/4 Model 90 Sheet 2

SEATS, ALARM SYSTEM, CENTRAL LOCKS, MIRROR, POWER WINDOW REGULATOR

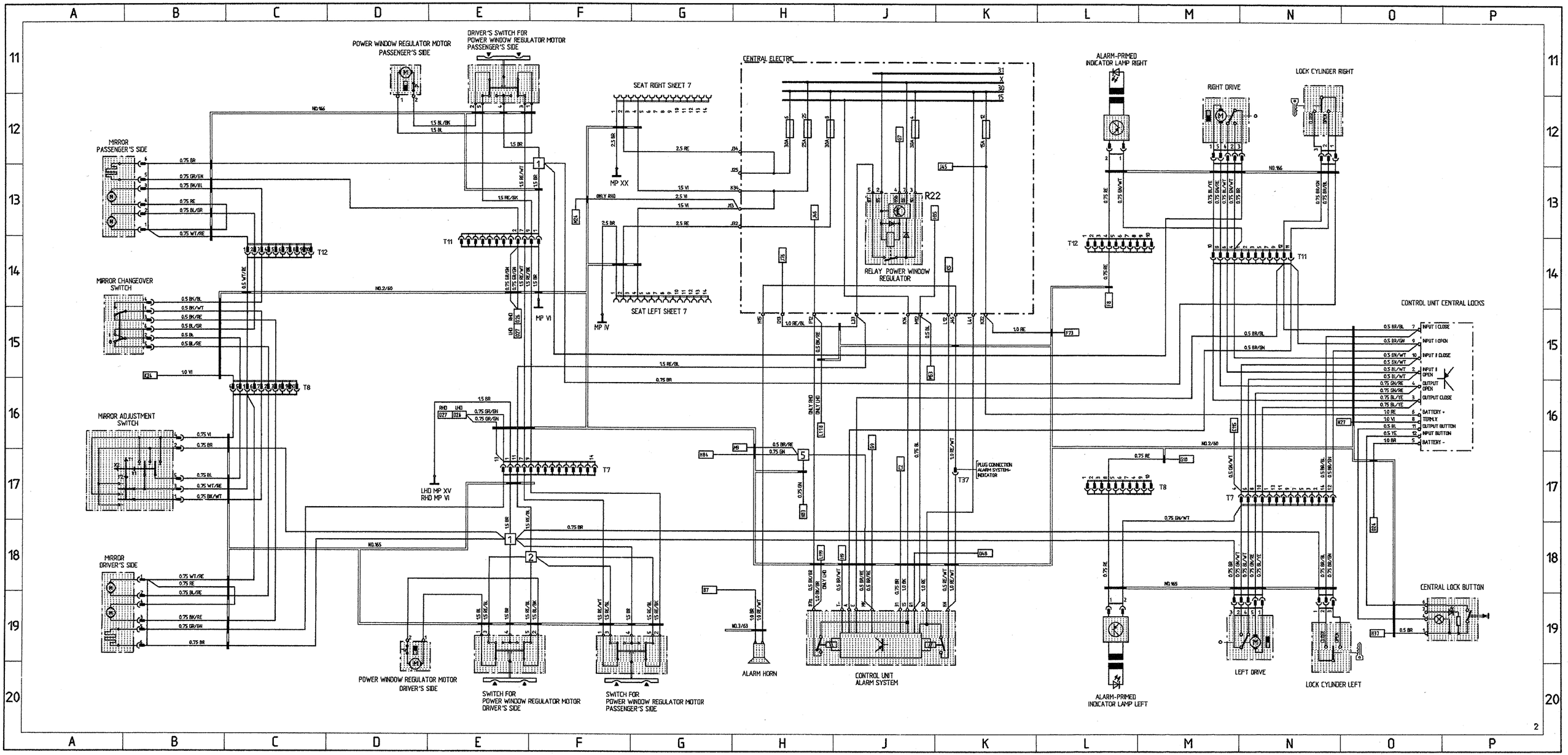

HEATER,AC

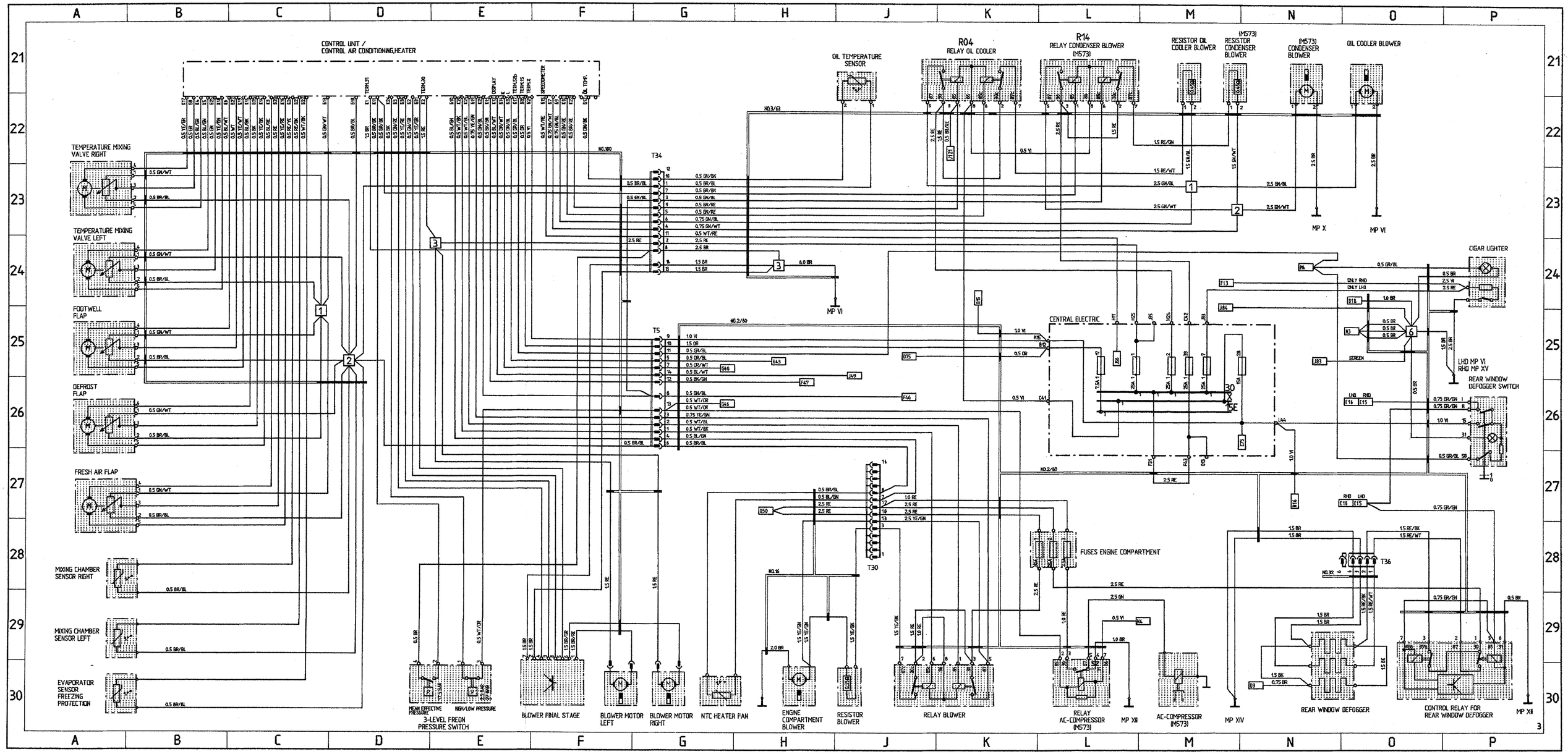
CONTROL UNIT / CONTROL AIR CONDITIONING,HEATER
OIL TEMPERATURE SENSOR
R04 RELAY OIL COOLER
R14 RELAY CONDENSER BLOWER (M573)
RESISTOR OIL COOLER BLOWER
(M573) RESISTOR CONDENSER BLOWER
(M573) CONDENSER BLOWER
OIL COOLER BLOWER
TEMPERATURE MIXING VALVE RIGHT
TEMPERATURE MIXING VALVE LEFT
FOOTWELL FLAP
DEFROST FLAP
FRESH AIR FLAP
MIXING CHAMBER SENSOR RIGHT
MIXING CHAMBER SENSOR LEFT
EVAPORATOR SENSOR FREEZING PROTECTION
T34
T5
T30
T36
MP VI
MP X
MP XII
MP XIV
CENTRAL ELECTRIC
FUSES ENGINE COMPARTMENT
CIGAR LIGHTER
REAR WINDOW DEFOGGER SWITCH
LHD MP VI
RHD MP XV
3-LEVEL FREON PRESSURE SWITCH
MEAN EFFECTIVE PRESSURE
HIGH/LOW PRESSURE
BLOWER FINAL STAGE
BLOWER MOTOR LEFT
BLOWER MOTOR RIGHT
NTC HEATER FAN
ENGINE COMPARTMENT BLOWER
RESISTOR BLOWER
RELAY BLOWER
RELAY AC-COMPRESSOR (M573)
AC-COMPRESSOR (M573)
REAR WINDOW DEFOGGER
CONTROL RELAY FOR REAR WINDOW DEFOGGER

ABS, PORSCHE DYNAMIC AWD CONTROL

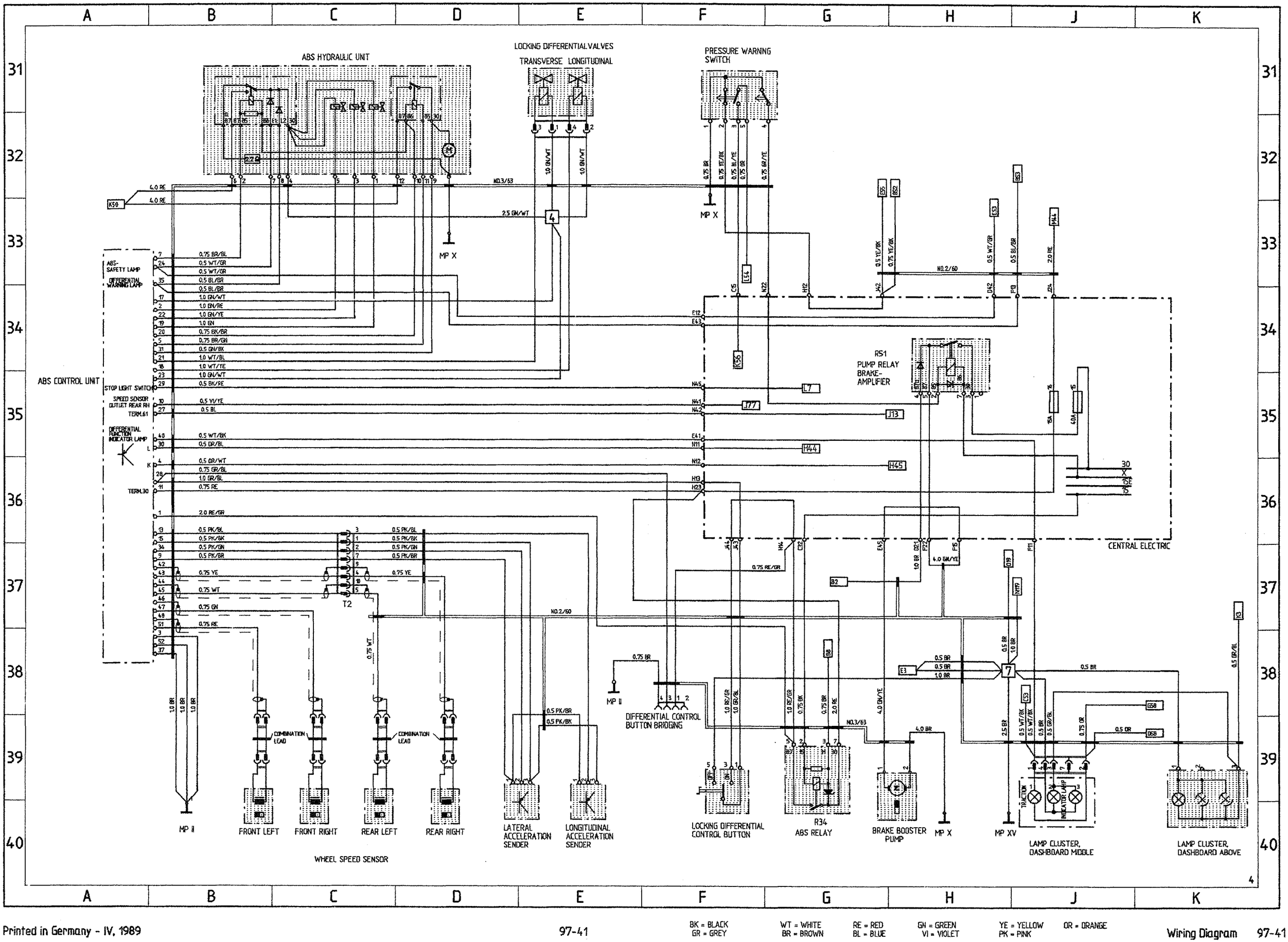

BK = BLACK GR = GREY WT = WHITE BR = BROWN RE = RED BL = BLUE GN = GREEN VI = VIOLET YE = YELLOW PK = PINK OR = ORANGE

ABS HYDRAULIC UNIT

ABS CONTROL UNIT

ABS-SAFETY LAMP

TERM.61

SPEED SENSOR OUTLET

FRONT LH

REAR RH

FRONT RH

MP X

MP II

T2

COMBINATION LEAD

COMBINATION LEAD

FRONT LEFT

FRONT RIGHT

REAR LEFT

REAR RIGHT

WHEEL SPEED SENSOR

R34
ABS RELAY

CENTRAL ELECTRIC

MP XV

LAMP CLUSTER, DASHBOARD MIDDLE

LAMP CLUSTER, DASHBOARD ABOVE

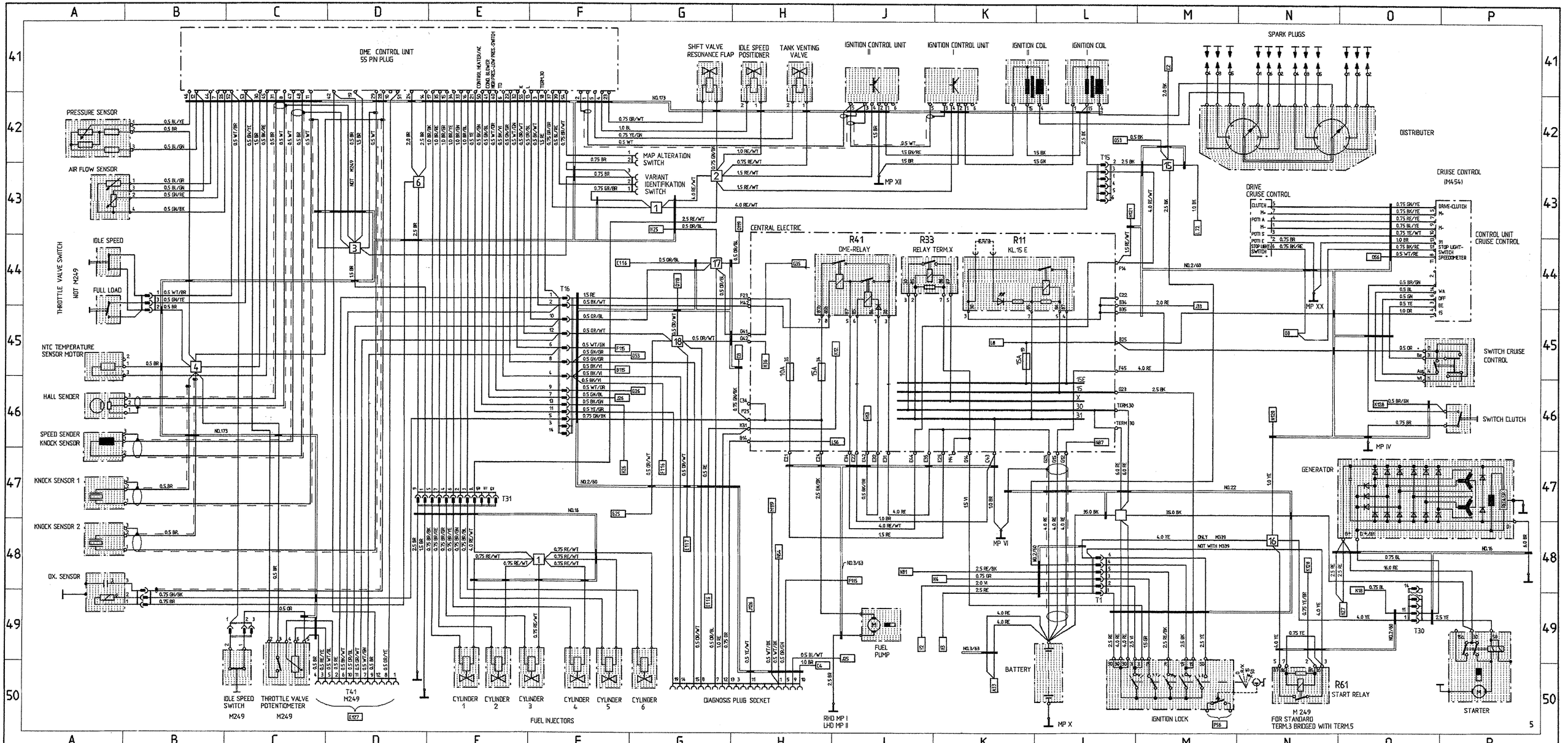
DME CONTROL UNIT 55 PIN PLUG
SHIFT VALVE RESONANCE FLAP
IDLE SPEED POSITIONER
TANK VENTING VALVE
IGNITION CONTROL UNIT II
IGNITION CONTROL UNIT I
IGNITION COIL II
IGNITION COIL I
SPARK PLUGS
DISTRIBUTER
PRESSURE SENSOR
AIR FLOW SENSOR
MAP ALTERATION SWITCH
VARIANT IDENTIFIKATION SWITCH
MP XII
CENTRAL ELECTRIC
R41 DME-RELAY
R33 RELAY TERM.X
R11 KL.15 E
CRUISE CONTROL (M454)
DRIVE CRUISE CONTROL
CONTROL UNIT CRUISE CONTROL
STOP LIGHT-SWITCH SPEEDOMETER
MP XX
SWITCH CRUISE CONTROL
SWITCH CLUTCH
MP IV
THROTTLE VALVE SWITCH NOT M249
IDLE SPEED
FULL LOAD
NTC TEMPERATURE SENSOR MOTOR
HALL SENDER
SPEED SENDER KNOCK SENSOR
KNOCK SENSOR 1
KNOCK SENSOR 2
OX. SENSOR
T16
T31
T41 M249
GENERATOR
MP VI
FUEL PUMP
BATTERY
MP X
T1
T30
STARTER
R61 START RELAY
M 249 FOR STANDARD TERM.1 BRIDGED WITH TERM.15
IGNITION LOCK
IDLE SPEED SWITCH M249
THROTTLE VALVE POTENTIOMETER M249
CYLINDER 1
CYLINDER 2
CYLINDER 3
CYLINDER 4
CYLINDER 5
CYLINDER 6
FUEL INJECTORS
DIAGNOSIS PLUG SOCKET
RHD MP I LHD MP II
NOT M249
ONLY M339
NOT WITH M339

911 Carrera 2/4 Model 90 Sheet 6

INSTRUMENTS AND SENDER

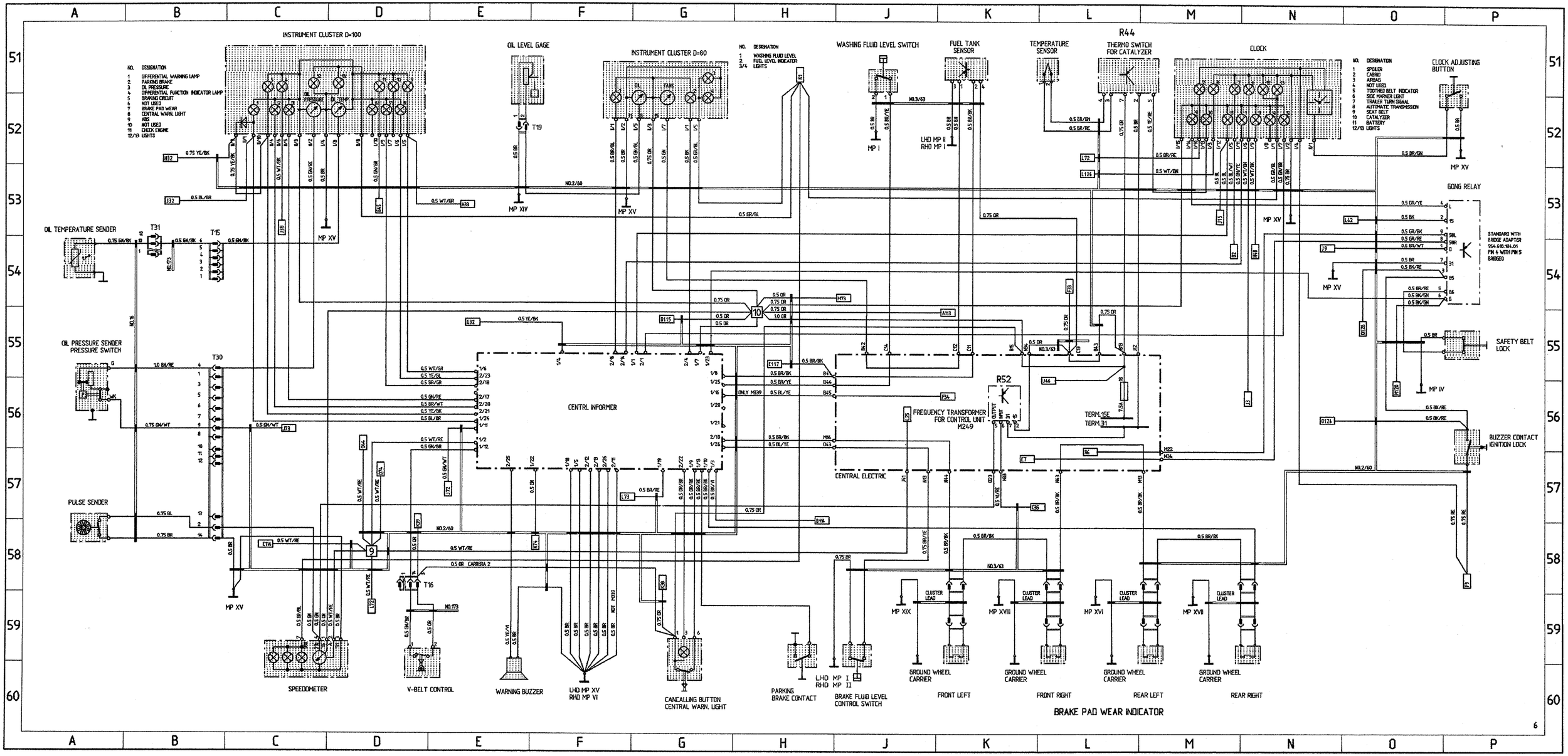

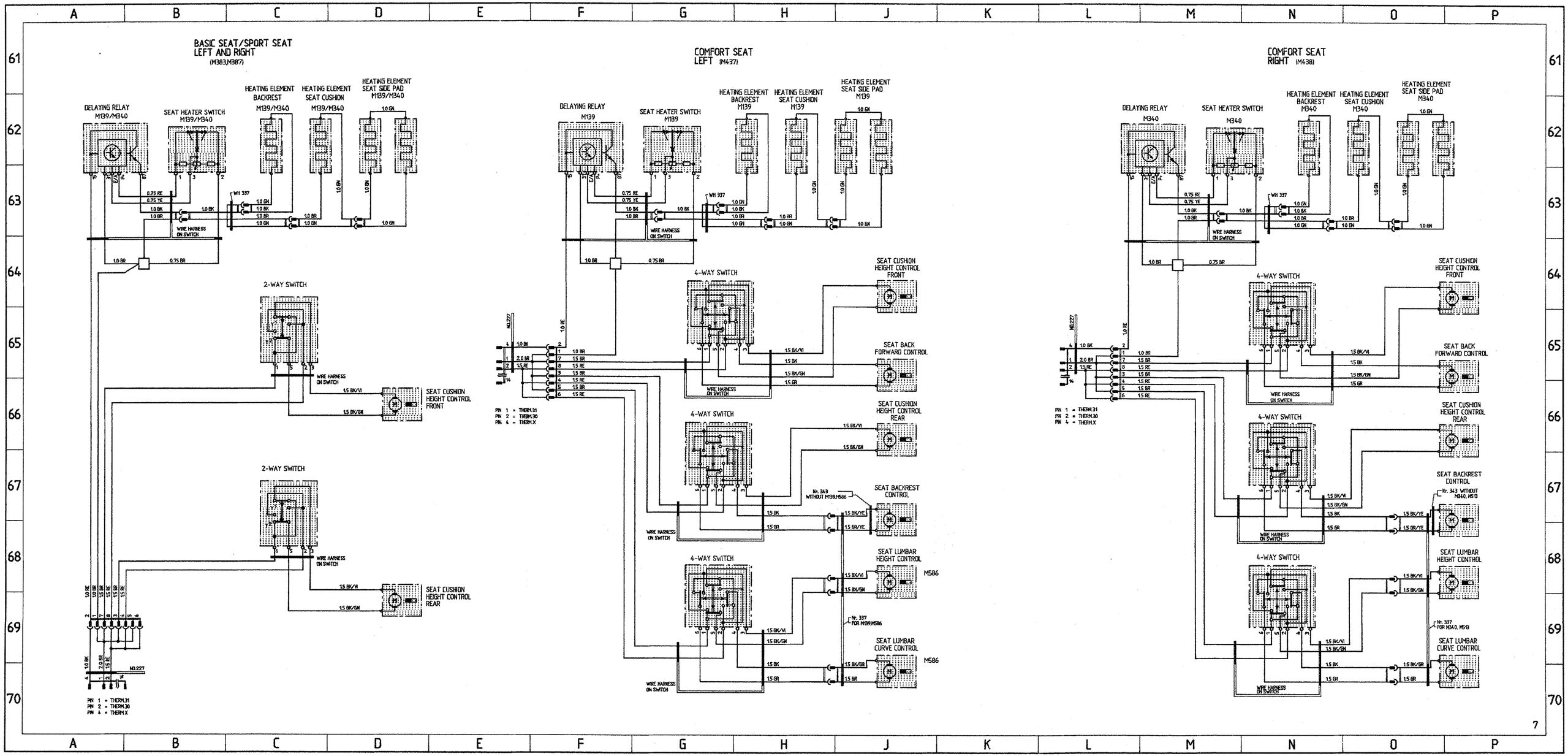
BASIC SEAT/SPORT SEAT
LEFT AND RIGHT
(M383,M387)
DELAYING RELAY
M139/M340
SEAT HEATER SWITCH
M139/M340
HEATING ELEMENT
BACKREST
M139/M340
HEATING ELEMENT
SEAT CUSHION
M139/M340
HEATING ELEMENT
SEAT SIDE PAD
M139/M340
WH 337
WIRE HARNESS
ON SWITCH
2-WAY SWITCH
SEAT CUSHION
HEIGHT CONTROL
FRONT
SEAT CUSHION
HEIGHT CONTROL
REAR
N0.227
PIN 1 = THERM.31
PIN 2 = THERM.30
PIN 4 = THERM.X
COMFORT SEAT
LEFT (M437)
DELAYING RELAY
M139
SEAT HEATER SWITCH
M139
HEATING ELEMENT
BACKREST
M139
HEATING ELEMENT
SEAT CUSHION
M139
HEATING ELEMENT
SEAT SIDE PAD
M139
4-WAY SWITCH
SEAT BACK
FORWARD CONTROL
SEAT BACKREST
CONTROL
Nr. 343
WITHOUT M139,M586
SEAT LUMBAR
HEIGHT CONTROL
M586
Nr. 337
FOR M139,M586
SEAT LUMBAR
CURVE CONTROL
M586
COMFORT SEAT
RIGHT (M438)
DELAYING RELAY
M340
SEAT HEATER SWITCH
M340
HEATING ELEMENT
BACKREST
M340
HEATING ELEMENT
SEAT CUSHION
M340
HEATING ELEMENT
SEAT SIDE PAD
M340
Nr. 343 WITHOUT
M340, M519
Nr. 337
FOR M340, M519

REAR SPOILER, TWO-TONE HORNS, WIPE- AND WASH CLEANERS, SUN ROOF, CONVERTIBLE TOP

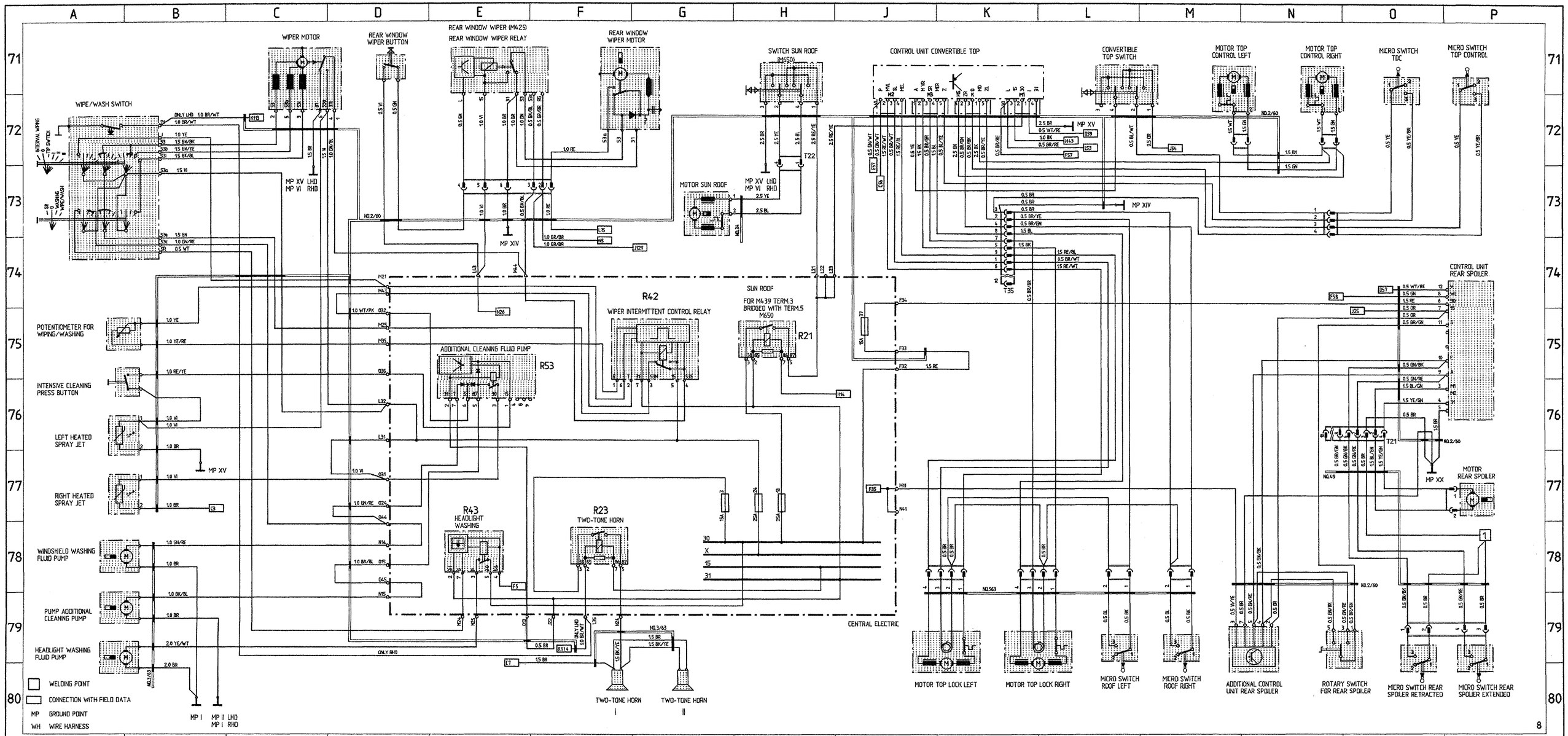

BK = BLACK WT = WHITE RE = RED GN = GREEN YE = YELLOW GR = GREY BR = BROWN BL = BLUE VI = VIOLET PK = PINK OR = ORANGE

RADIO

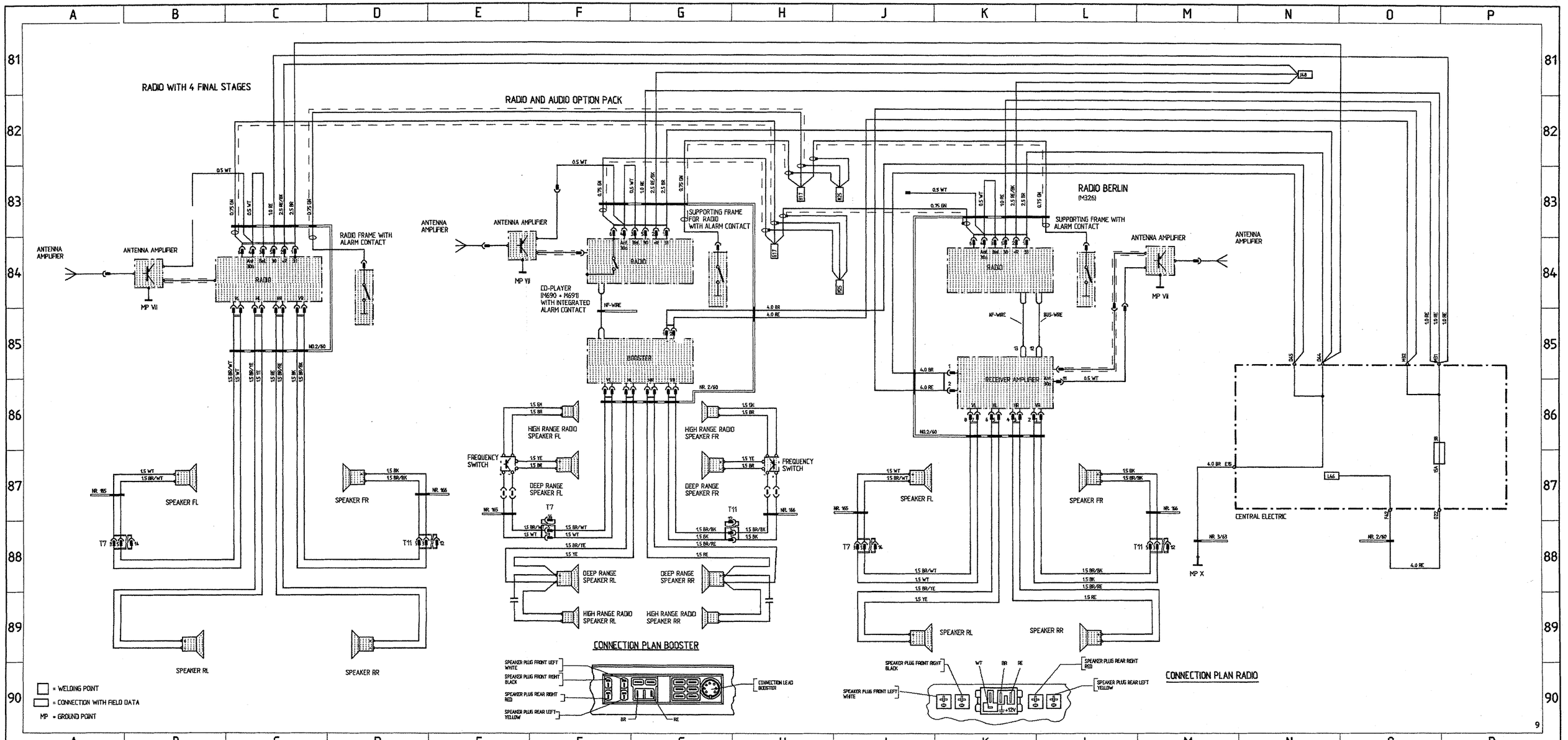
RADIO WITH 4 FINAL STAGES
RADIO AND AUDIO OPTION PACK
RADIO BERLIN
(M326)
ANTENNA AMPLIFIER
RADIO
RADIO FRAME WITH ALARM CONTACT
SUPPORTING FRAME FOR RADIO WITH ALARM CONTACT
CD-PLAYER (M690 + M691) WITH INTEGRATED ALARM CONTACT
BOOSTER
RECEIVER AMPLIFIER
HIGH RANGE RADIO SPEAKER FL
HIGH RANGE RADIO SPEAKER FR
DEEP RANGE SPEAKER FL
DEEP RANGE SPEAKER FR
DEEP RANGE SPEAKER RL
DEEP RANGE SPEAKER RR
HIGH RANGE RADIO SPEAKER RL
HIGH RANGE RADIO SPEAKER RR
FREQUENCY SWITCH
SPEAKER FL
SPEAKER FR
SPEAKER RL
SPEAKER RR
CENTRAL ELECTRIC
CONNECTION PLAN BOOSTER
CONNECTION PLAN RADIO
= WELDING POINT
= CONNECTION WITH FIELD DATA
MP = GROUND POINT

FOG LIGHT- AND REAR FOG LIGHT - WIRINGS

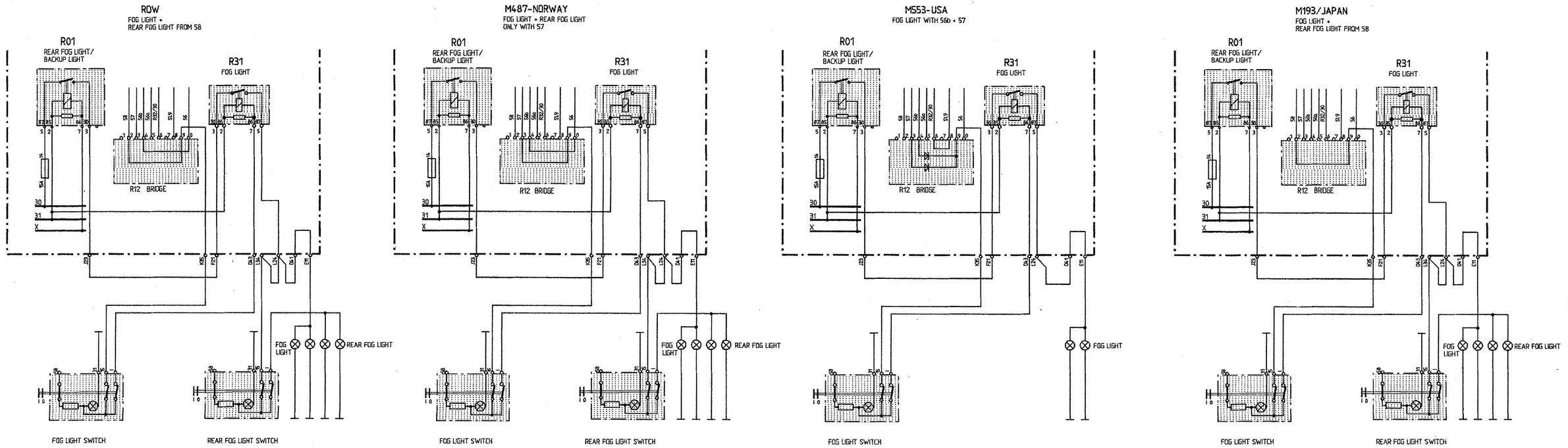

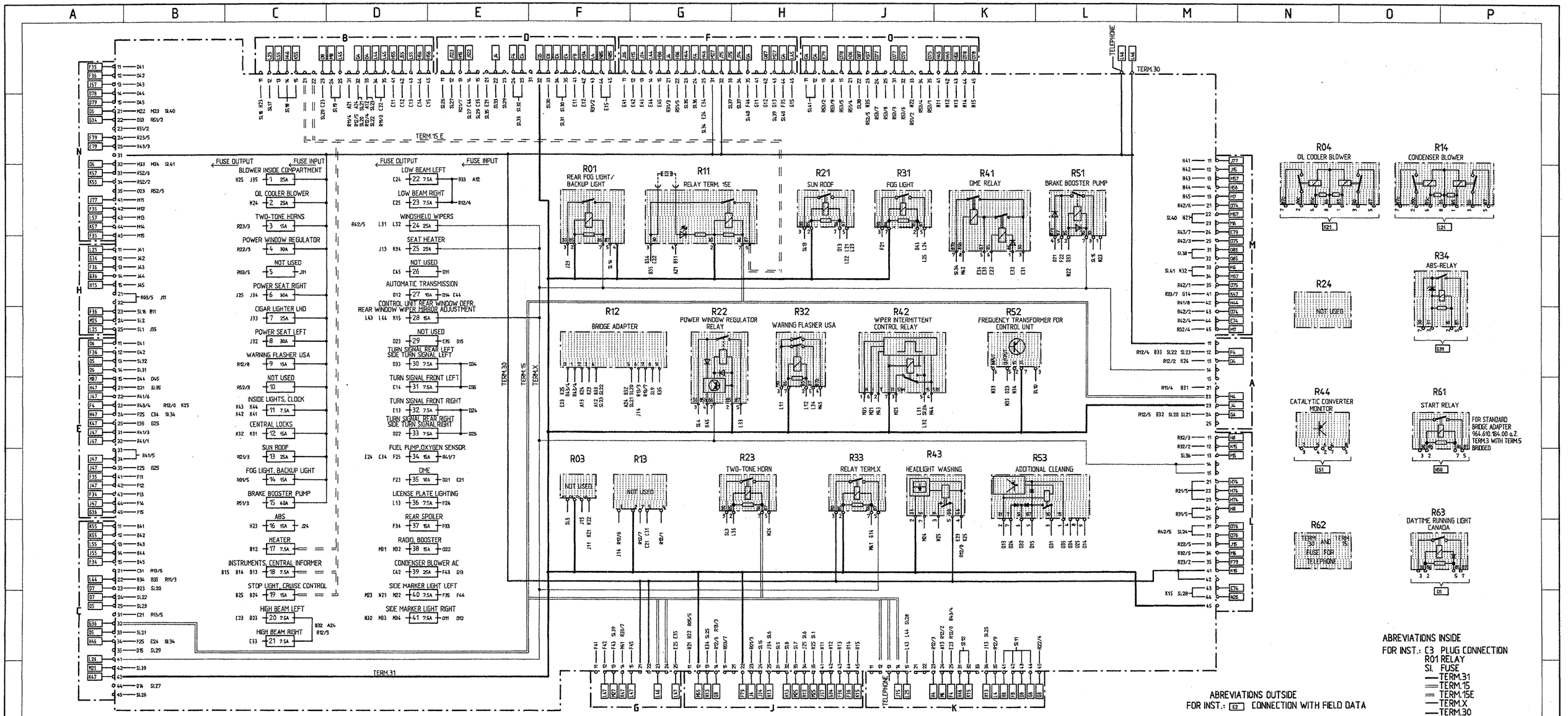
FUSE OUTPUT
FUSE INPUT
BLOWER INSIDE COMPARTMENT
OIL COOLER BLOWER
TWO-TONE HORNS
POWER WINDOW REGULATOR
NOT USED
POWER SEAT RIGHT
CIGAR LIGHTER LHD
POWER SEAT LEFT
WARNING FLASHER USA
INSIDE LIGHTS, CLOCK
CENTRAL LOCKS
SUN ROOF
FOG LIGHT, BACKUP LIGHT
BRAKE BOOSTER PUMP
ABS
HEATER
INSTRUMENTS, CENTRAL INFORMER
STOP LIGHT, CRUISE CONTROL
HIGH BEAM LEFT
HIGH BEAM RIGHT
LOW BEAM LEFT
LOW BEAM RIGHT
WINDSHIELD WIPERS
SEAT HEATER
AUTOMATIC TRANSMISSION
CONTROL UNIT REAR WINDOW DEFR.
REAR WINDOW WIPER MIRROR ADJUSTMENT
TURN SIGNAL REAR LEFT
SIDE TURN SIGNAL LEFT
TURN SIGNAL FRONT LEFT
TURN SIGNAL FRONT RIGHT
TURN SIGNAL REAR RIGHT
SIDE TURN SIGNAL RIGHT
FUEL PUMP, OXYGEN SENSOR
DME
LICENSE PLATE LIGHTING
REAR SPOILER
RADIO, BOOSTER
CONDENSER BLOWER AC
SIDE MARKER LIGHT LEFT
SIDE MARKER LIGHT RIGHT
R01 REAR FOG LIGHT/ BACKUP LIGHT
R11 RELAY TERM. 15E
R21 SUN ROOF
R31 FOG LIGHT
R41 DME RELAY
R51 BRAKE BOOSTER PUMP
R12 BRIDGE ADAPTER
R22 POWER WINDOW REGULATOR RELAY
R32 WARNING FLASHER USA
R42 WIPER INTERMITTENT CONTROL RELAY
R52 FREQUENCY TRANSFORMER FOR CONTROL UNIT
R03 NOT USED
R13 NOT USED
R23 TWO-TONE HORN
R33 RELAY TERM.X
R43 HEADLIGHT WASHING
R53 ADDITIONAL CLEANING
R04 OIL COOLER BLOWER
R14 CONDENSER BLOWER
R24 NOT USED
R34 ABS-RELAY
R44 CATALYTIC CONVERTER MONITOR
R61 START RELAY
FOR STANDARD BRIDGE ADAPTER 964.610.184.00 a.Z. TERM.3 WITH TERM.5 BRIDGED
R62 TERM. 30 AND TERM. 15 FUSE FOR TELEPHONE
R63 DAYTIME RUNNING LIGHT CANADA
TERM.30
TERM.15E
TERM.15
TERM.X
TERM.31
TELEPHONE
ABREVIATIONS INSIDE
FOR INST.: C3 PLUG CONNECTION
R01 RELAY
SI. FUSE
TERM.31
TERM.15
TERM.15E
TERM.X
TERM.30
ABREVIATIONS OUTSIDE
FOR INST.: E2 CONNECTION WITH FIELD DATA

CONSTRUCTION COMPONENTS

CONSTRUCTION COMPONENTS

DESIGNATION, FUNCTION	POSITION IN VEHICLE LHD	RHD	NOTE	FIELD IN WIRING DIAGRAMM
ABS RELAY	6cM	6cM	CENTRAL ELECTRIC	G39/40
ALARM HORN	3cL	3cL	IN WHEEL HOUSING FRONT RIGHT	H19
ANTENNA AMPLIFIER	7bL	7bQ	IN LUGGAGE COMPARTMENT	B84,E84,M84
EXTERIOR TEMPERATURE TRANSMITTER	8bR	8bK	IN OUTSIDE MIRROW	D118
FLASHER	7dN	7dN	IN CENTRE CONSOLE	D1
BOOSTER	9eM	9eM	UNDER THE SEAT RIGHT	F/G85
STOP LIGHT SWITCH	6dP	6dM	AT THE BRAKE PEDAL BELOW THE FLOOR PANEL	N10
DIAGNOSIS CONNECTION	7cL	7cQ	IN PASSENGER'S FOOTWELL	G/H50
DME RELAY	6cM	6cM	CENTRAL ELECTRIC	J44
DME CONTROL UNIT	9eP	9eP	UNDER THE SEAT LEFT	B-F41
SPEED SENDER	15cP	15cP	ON ENGINE LEFT	A47
THROTTLE VALVE POTENTIOMETER AUTOMATIC TRANSMISSION	15bN	15bN	ON THROTTLE VALVE ASSEMBLY	C50
THROTTLE VALVE SWITCH, TRANSMISSION	15bN	15bN	ON THROTTLE VALVE ASSEMBLY	A44/45
PRESSURE SENSOR	10eP	10eP	UNDER THE SEAT LEFT	A42
PRESSURE WARNING SWITCH	1dO	1dO	IN LUGGAGE COMPARTMENT	F31
PRESSURE SWITCH AIR CONDITIONING SYSTEM	6bO	—	IN LUGGAGE COMPARTMENT	E30
RECEIVER FOR RADIO BERLIN	9eM	9eM	UNDER THE SEAT RIGHT	K86
TWO-TONE HORN I	3cL	3cL	IN WHEEL HOUSING FRONT RIGHT	F80
TWO-TONE HORN II	3cL	3cL	IN WHEEL HOUSING FRONT RIGHT	G80
FREQUENCY SWITCH FRONT LEFT	9dQ	9dQ	UNDER THE DOOR TRIM PANEL	E87
FREQUENCY SWITCH FRONT RIGHT	9dL	9dL	UNDER THE DOOR TRIM PANEL	H87
CRASH SENSOR RIGHT	4cM	—	IN LUGGAGE COMPARTMENT	N112
CRASH SENSOR LEFT	4cP	—	IN LUGGAGE COMPARTMENT	K/L112
BLOWER FINAL STAGE	6bN	6bN	IN LUGGAGE COMPARTMENT	F30
BLOWER ENGINE COMPARTM.	16cO	16cO	ON ENGINE	H30
BLOWER MOTOR RIGHT	6cM	6cM	IN LUGGAGE COMPARTMENT	G30
BLOWER MOTOR LEFT	6cP	6cP	IN LUGGAGE COMPARTMENT	F30
GONG RELAY	6cP	—	ON STEERING COLUMN/LEFT	P53/54
HALL SENDER	17cO	17cO	ON DISTRIBUTOR	A46
REAR WINDOW WIPER RELAY	15bO	15bO	ON REAR WINDOW WIPER MOTOR	E71
HYDRAULIC UNIT ABS	3dP	3dP	IN LUGGAGE COMPARTMENT	C32
PULSE SENDER	13dO	13dO	ON GEARBOX	A58
V-BELT CONTROL	17dO	17dO	ON ENGINE	D60
MAP ALTERATION-SWITCH	9eP	9eP	UNDER THE SEAT LEFT	G42
KICK-DOWN SWITCH	6dO	6dM	ON ACCELERATOR PEDAL BELOW THE FLOOR PANEL	M122
KNOCK SENSOR 1	15cP	15cP	ON ENGINE LEFT	A47
KNOCK SENSOR 2	16cN	16cN	ON ENGINE ABOVE	A48
CONDENSER BLOWER	2dQ	2dQ	IN WHEEL HOUSING FRONT LEFT	N21
FUEL PUMP	6eM	6eP	BEHIND THE BASE	J49
CLUTCH SWITCH CRUISE CONTROL	6dP	6dN	ON CLUTCH PEDAL BELOW THE FLOOR PANEL	P46
LONGITUDINAL ACCELERATION SENDER	7dN	7dN	IN CENTRE CONSOLE	E40
LOCKING DIFFERENTIAL VALVES, LONGITUDINAL / TRANSVERSE	3dM	3dM	IN LUGGAGE COMPARTMENT	E31
IDLE SPEED SWITCH AUTOMATIC TRANSMISSION	15bN	15bN	ON ENGINE	C50
IDLE SPEED POSITIONER	15bN	15bN	ENGINE COMPARTMENT	H41
AIR FLOW SENSOR	16bO	16bO	ON ENGINE	A43
MICRO SWITCH ROOF RIGHT	9aN	9aN	ON CONVERTIBLE TOP FRAME	M79
MICRO SWITCH ROOF LEFT	9aO	9aO	ON CONVERTIBLE TOP FRAME	L79
MICRO SWITCH REAR SPOLIER EXTENDED	16bP	16bP	ON TAILGATE	P79
MICRO SWITCH REAR SPOILER RETRACTED	16bP	16bP	ON TAILGATE	079
MICRO SWITCH DEAD CENTER	12cL	12cL	SIDE PANAL COVERING RIGHT	071
MICRO SWITCH FOR CONVERTIBLE CONTROL	12cL	12cL	SIDE PANAL COVERING RIGHT	P71
MOTOR SUN ROOF	12aN	12aN	IN ROOF	G73
MOTOR CONVERTIBLE TOP ACTUATION RIGHT	15cN	15cN	BEHIND REAR SEAT	N71
MOTOR CONVERTIBLE TOP ACTUATION LEFT	15cO	15cO	BEHIND REAR SEAT	M71
MOTOR CONVERTIBLE TOP LOCKING DEVICE RIGHT	9aN	9aN	ON CONVERTIBLE TOP FRAME	K/L79
MOTOR CONVERTIBLE TOP LOCKING DEVICE LEFT	9aO	9aO	ON CONVERTIBLE TOP FRAME	J/K79
REAR FOG LIGHT CUTOUT RELAY	17dN	17dN	BEHIND REAR PANEL	A108
NTC HEATER FAN	16cP	16cP	ENGINE COMPARTMENT	G30
OIL PRESSURE SENDER / SWITCH	14cN	14cN	ON ENGINE	A55/56
OIL COOLER BLOWER	2dL	2dL	IN WHEEL HOUSING FRONT RIGHT	O21
OIL LEVEL GAGE	12cK	12cK	IN WHEEL HOUSINGAR RIGHT	E/F51/52

CONSTRUCTION COMPONENTS

DESIGNATION, FUNCTION	POSITION IN VEHICLE LHD	RHD	NOTE	FIELD IN WIRING DIAGRAMM
OIL TEMPERATURE SENDER FOR INSTRUMENT	14cN	14cN	ON ENGINE	A54
OIL TEMPERATURE SENDER FOR OIL COOLER BLOWER	2dL	2dL	IN WHEEL HOUSINBONT RIGHT	J21
SWITCH LIFTING	12dO	12dO	ON GEARBOX	B126/127
BRAKE BOOSTER PUMP	1dO	1dO	IN LUGGAGE COMPARTMENT	H39/40
LATERAL ACCELERATION SENDER ABS	7dN	7dN	IN CENTRE CONSOLE	D40
LATERAL ACCELERATION SENDER AUTOMATIC TRANSMISSION	7dN	7dN	IN CENTRE CONSOLE	K129
CONTROL RELAY REAR WINDOW DEFOGGER	16cP	16cP	CARRIER PLATE IN ENGINE COMPARTMENT	O/P29/30
RELAY CONDENSER BLOWER	6cM	6cM	CENTRAL ELECTRIC	L21
RELAY AC COMPRESSOR	16cP	16cP	CARRIER PLATE IN ENGINE COMPARTMENT	L30
RELAY ALARM SYSTEM USA	6cM	6cM	CENTRAL ELECTRIC	K/L7
RELAY TWO-TONE HORN	6cM	6cM	CENTRAL ELECTRIC	F78
RELAY POWER WINDOW REGULATOR	6cM	6cM	CENTRAL ELECTRIC	J13/14
RELAY FREQUENCY TRANSFORMER	6cM	6cM	CENTRAL ELECTRIC	K56
RELAY BLOWER ENGINE COMPARTM.	16cP	16cP	CARRIER PLATE IN ENGINE COMPARTMENT	J/K30
RELAY STARTER AUTOMATIC TRANSMISSION	6cM	6cM	CENTRAL ELECTRIC	N50
RELAY ADDITIONAL CLEANING FLUID PUMP	6cM	6cM	CENTRAL ELECTRIC	E75/76
RELAY TEMP. SWITCH CATALYZER	6cM	6cM	CENTRAL ELECTRIC	L/M51
RELAY TERM.X	6cM	6cM	CENTRAL ELECTRIC	K44
RELAY TERM.15 E	6cM	6cM	CENTRAL ELECTRIC	K/L44
RELAY REAR FOG LIGHT- BACKUP LIGHT	6cM	6cM	CENTRAL ELECTRIC	J/K7
RELAY FRONT FOG LAMP	6cM	6cM	CENTRAL ELECTRIC	J7
RELAY OIL COOLER BLOWER	6cM	6cM	CENTRAL ELECTRIC	K21
RELAY BRAKE BOOSTER PUMP	6cM	6cM	CENTRAL ELECTRIC	H34/35
RELAY SUN ROOF	6cM	6cM	CENTRAL ELECTRIC	H75
RELAY DAYTIME RUNNING LIGHT CANADA	6cM	6cM	CENTRAL ELECTRIC	D1
BACKUP LIGHT SWITCH	14dN	14dN	ON GEARBOX RIGHT	N1
SHIFT VALVE RESONANCE FLAP	15bN	15bN	ON ENGINE	G41
WINDSHIELD WASHING FLUID PUMP	3cQ	3cQ	ON WINDSHIELD WASHER TANKIN WHEEL HOUSING FRONT LEFT-	A78
FUSES ENGINE COMPARTMENT	16cP	16cP	CARRIER PLATE IN ENGINE COMPARTMENT	L28
HEADLIGHT CLEANER PUMP	3cQ	3cQ	ON WINDSHIELD WASHER TANKIN WHEEL HOUSING FRONT LEFT-	A79/80
HEADLIGHT CLEANER RELAY	6cM	6cM	CENTRAL ELECTRIC	E78
STARTER	14dN	14dN	ON CLUTCH BELL HOUSING RIGHT	P49/50
DRIVE CRUISE CONTROL	15cO	15cO	ON ENGINE	N43/44
CONTROL UNIT ABS	2dM	2dM	IN LUGGAGE COMPARTMENT	A33-38
CONTROL UNIT AIRBAG	6cO	—	ON INTRUMENT PANEL	P114/115
CONTROL UNIT ALARM SYSTEM	7bL	7cQ	IN LUGGAGE COMPARTMENT	J19
CONTROL UNIT AUTOMATIC TRANSMISSION	10dP	10dP	UNDER THE SEAT RIGHT	C-G122
CONTROL UNIT CONVERTIBLE TOP	6cP	6cM	ON INTRUMENT PANEL	J/K71
CONTROL UNIT INSTRUMENT LIGHTS	7bO	7bQ	IN LUGGAGE COMPARTMENT LEFT	K1
CONTROL UNIT REAR SPOILER	9eN	9eN	UNDER THE SEAT RIGHT	P74-76
CONTROL UNIT HEATER, AIR CONDITIONER	7cO	7cN	ON INTRUMENT PANEL	B-F21
CONTROL UNIT CRUISE CONTROL	9eN	9eN	UNDER THE SEAT RIGHT	P43/44
CONTROL UNIT CENTRAL LOCKS	6cN	6cN	UNDER THE INSTRUMENT PANEL	P15/16
BUZZER CONTACT	7cP	7cM	ON IGNITION LOCK	P56
FUEL LEVEL SENDER	5cM	5cP	IN FUEL TANK	K51
TANK VENTING VALVE	15cN	15cN	ON ENGINE ABOVE	H41
TEMPERATURE MOTOR	15cP	15cP	ON ENGINE LEFT	A45
VARIANT IDENTIFIKATION SWITCH	9eP	9eP	UNDER THE SEAT LEFT	G43
RESISTOR BLOWER	16dP	16dP	ENGINE COMPARTMENT	J30
RESISTOR CONDENSER BLOWER	2dQ	2dQ	IN WHEEL HOUSING FRONT LEFT	M21
RESISTOR OIL COOLER BLOWER	2dL	2dL	IN WHEEL HOUSING FRONT RIGHT	M21
WARNING BUZZER	7cP	7cP	ON INTRUMENT PANEL	E60
WIPER INTERMITTENT CONTROL RELAY	6cM	6cM	CENTRAL ELECTRIC	F/G75
CENTRAL ELECTRIC	6cM	6cM	IN LUGGAGE COMPARTMENT	—
CENTRL INFORMER	6cP	6cP	ON STEERING COLUMN	F56
IGNITION CONTROL UNIT I	15cP	15cP	ENGINE COMPARTMENT LEFT	K41
IGNITION CONTROL UNIT II	15cP	15cP	ENGINE COMPARTMENT LEFT	J41
IGNITION COIL I	15cQ	15cQ	ENGINE COMPARTMENT LEFT	L41
IGNITION COIL II	15cQ	15cQ	ENGINE COMPARTMENT LEFT	K41
ADDITIONAL CLEANING FLUID PUMP	4cM	4cQ	IN LUGGAGE COMPARTMENT	A79
ADDITIONAL CONTROL UNIT REAR SPOILER	9eM	9eM	UNDER THE SEAT RIGHT	N79

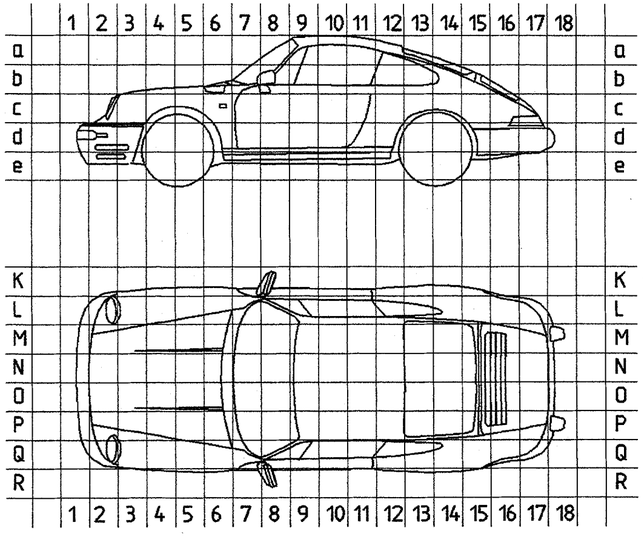

12

PLUG CONNECTIONS AND GROUND POINTS

PLUG CONNECTIONS

CODE	NUMBER OF PINS	DESIGNATION, FUNCTION	POSITION IN VEHICLE LHD	POSITION IN VEHICLE RHD	NOTE	FIELD
T1	6	IGNITION LOCK	6cP	6cM	ON STEERING COLUMN LEFT	L48
T2	10	ABS	6cL	6cL	IN LUGGAGE COMPARTMENT RIGHT	C36/37, K122
T5	14	HEATER, AIR CONDITIONER	6cM	6cM	UNDER THE INSTRUMENT PANEL RIGHT	G25/26
T6	6	AIRBAG	7dN	7dN	IN CENTRE CONSOLE	M117
T7	14	DOOR DRIVER'S SIDE	6cQ	6cL	UNDER THE INSTRUMENT PANEL LEFT	A88,F88,J88,E/F17,N17
T8	10	DOOR DRIVER'S SIDE	6cQ	6cL	UNDER THE INSTRUMENT PANEL LEFT	C16,E117,L17
T9	2	AIRBAG	7dN	7dN	IN CENTRE CONSOLE	N117
T11	12	DOOR PASSENGER'S SIDE	6cL	6cQ	UNDER THE INSTRUMENT PANEL RIGHT	E14,M/N14,D88,H88,M88
T12	10	DOOR PASSENGER'S SIDE	6cL	6cQ	UNDER THE INSTRUMENT PANEL RIGHT	C14,L/M14
T15	6	DME	9eP	9eP	UNDER THE SEAT LEFT	L43/B54
T16	14	DME	9eP	9eP	UNDER THE SEAT LEFT	F45/46,D58
T18	2	LICENSE PLATE LIGHTS	17dL	17dL	TAIL LIGHTS RIGHT	D4
T19	2	OIL LEVEL GAGE	15cM	15cM	ENGINE COMPARTMENT RIGHT	E52
T20	2	GLOVE BOX LAMP ,AIRBAG	6cL	---	UNDER THE INSTRUMENT PANEL RIGHT	C/D9
T21	10	TAILGATE	15cL	15cL	ENGINE COMPARTMENT RIGHT	M/N9,N76
T22	4	INSIDE LIGHTS, SUN ROOF	15bM	15bM	BELOW THE PARCEL TRAY	K9,H73
T23	2	INSIDE LIGHTS CONVERTIBLE, TARGA	6cQ	6cQ	UNDER THE INSTRUMENT PANEL LEFT	J10
T24	2	SIDE TURN SIGNAL LEFT	7bQ	7bQ	IN LUGGAGE AT THE LONGITUDINAL SUPPORT LEFT	D/E9
T25	2	SIDE TURN SIGNAL RIGHT	7bL	7bL	IN LUGGAGE AT THE LONGITUDINAL SUPPORT RIGHT	E2
T27	2	LUGGAGE COMPARTMENT LIGHT	7bL	7bL	IN LUGGAGE AT THE LONGITUDINAL SUPPORT RIGHT	E9
T30	14	NO. 16 MOTOR	16cP	16cP	CARRIER PLATE IN ENGINE COMPARTMENT	N/03,J27/28,048/49,B55-58
T31	12	MOTOR, DME	16cP	16cP	CARRIER PLATE IN ENGINE COMPARTMENT	D/E47,B54
T34	14	HEATER, AIR CONDITIONER	6cM	6cM	IN LUGGAGE COMPARTMENT RIGHT	G23/24
T35	12	CONVERTIBLE TOP	12cL	12cL	SIDE PANAL COVERING RIGHT	K73/74
T36	6	REAR WINDOW	15bM	15bM	BELOW THE PARCEL TRAY	D9,D28
T37	1	ALARM SYSTEM INDICATOR	7bL	7bQ	IN LUGGAGE COMPARTMENT	K17
T38	7	NO.4, FRONT LIGHTS	3cL	3cL	IN WHEEL HOUSING FRONT RIGHT	C5/6
T39	5	NO.4, FRONT LIGHTS	3cL	3cL	IN WHEEL HOUSING FRONT RIGHT	C6/7
T40	30	AUTOMATIC TRANSMISSION	9eP	9eP	UNDER THE SEAT LEFT	H124/125
T41	12	AUTOMATIC TRANSMISSION	9eP	9eP	UNDER THE SEAT LEFT	C/D50,E127

GROUND POINTS

CODE	NOTE	POSITION IN VEHICLE LHD
MP I	LUGGAGE COMPARTMENT, WHEEL HOUSING LEFT	2cP
MP II	LUGGAGE COMPARTMENT, WHEEL HOUSING RIGHT	2cM
MP III	ON FIREWALL	---
MP IV	GROUND OF POWER CONSUMERS, UNDER THE SEAT LEFT	11eP
MP V	ELEKTRONIC,UNDER THE SEAT LEFT	10eP
MP VI	CENTRAL ELECTRIC, ON LONGITUDINAL SUPPORT RIGHT	6bL
MP VII	ANTENNA AMPLIFIER, ON LONGITUDINAL SUPPORT RIGHT	7bL
MP VIII	INSIDE LIGHTS CONVERTIBLE, ROOF, CENTER, FRONT	9aN
MP IX	INSIDE LIGHTS, ROOF RIGHT	11aL
MP IX	INSIDE LIGHTS, ROOF LEFT	11aP
MP X	BATTERY, LUGGAGE COMPARTMENT LEFT	3eP
MP XI	GROUND STRAP (STARTER, TRANSMISSION, MOTOR, BODY)	14cM
MP XII	ENGINE COMPARTMENT REAR LEFT	15cQ
MP XIII	MOTOR LEFT	15cQ
MP XIV	ENGINE COMPARTM. REAR RIGHT	15cL
MP XV	INSTRUMENTS, LONGITUDINAL SUPPORT LEFT	7bQ
MP XVI	COMBINATION LEAD REAR LEFT	13dP
MP XVII	COMBINATION LEAD REAR RIGHT	12dM
MP XVIII	COMBINATION LEAD FRONT RIGHT	4cM
MP XIX	COMBINATION LEAD FRONT LEFT	4cP
MP XX	SEAT CROSS MEMBER UNDER THE SEAT RIGHT	8eL

M - NUMBERS

M 139	ADJUSTABLE SEAT HEATING SEAT LEFT
M 193	JAPAN VERSION
M 249	AUTOMATIC TRANSMISSION
M 326	RADIO BERLIN
M 340	ADJUSTABLE SEAT HEATING SEAT RIGHT
M 383	SPORT SEAT LEFT HEIGHT ELECTR. ADJUSTABLE
M 387	SPORT SEAT RIGHT HEIGHT ELECTR. ADJUSTABLE
M 425	REAR WINDOW WIPER
M 437	COMFORT SEAT LEFT
M 438	COMFORT SEAT RIGHT
M 439	ELECTRIC CONVERTIBLE TOP
M 454	CRUISE CONTROL
M 513	LUMBAR SUPPORT SEAT RIGHT
M 553	USA - CANADA VERSION
M 562	AIRBAG
M 573	RELAY CONDENSER BLOWER
M 576	WITHOUT REAR FOG LIGHT
M 586	LUMBAR SUPPORT SEAT LEFT
M 602	HIGH MOUNTED STOP LIGHT
M 650	SUN ROOF
M 659	ON-BOARD COMPUTER

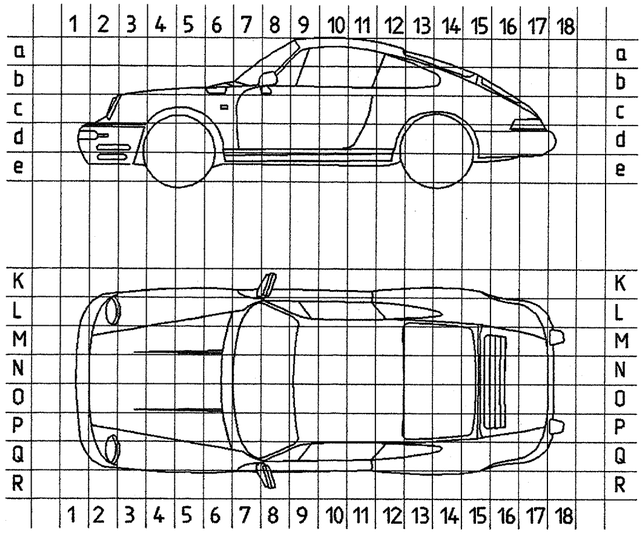

13

ADDITIONAL WIRING DIAGRAM TRAILER COUPLING

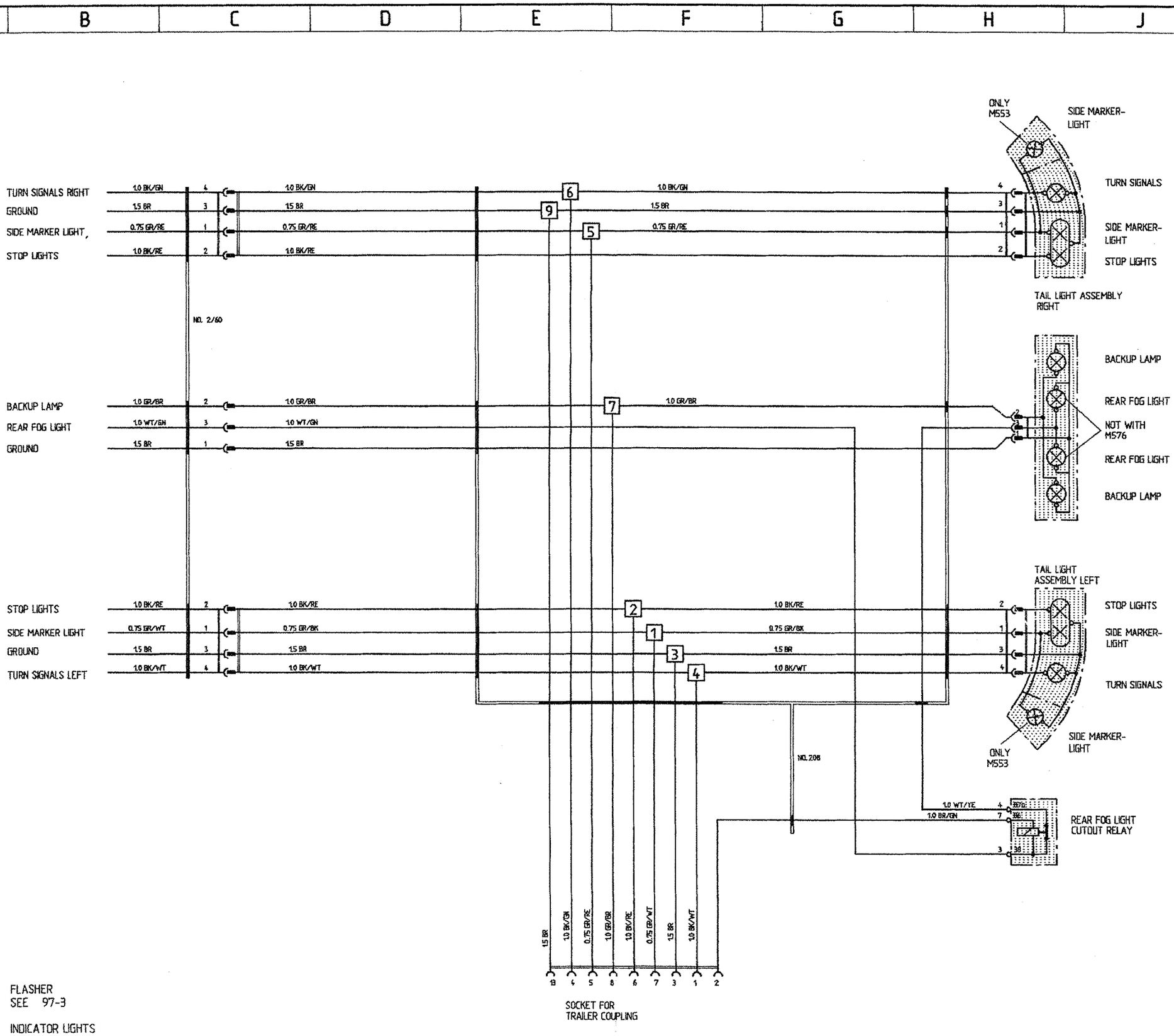

911 Carrera 2/4 Model 90 Sheet 15

SPEED SENDER, REV-METER WITH ON-BOARD COMPUTER, AIRBAG

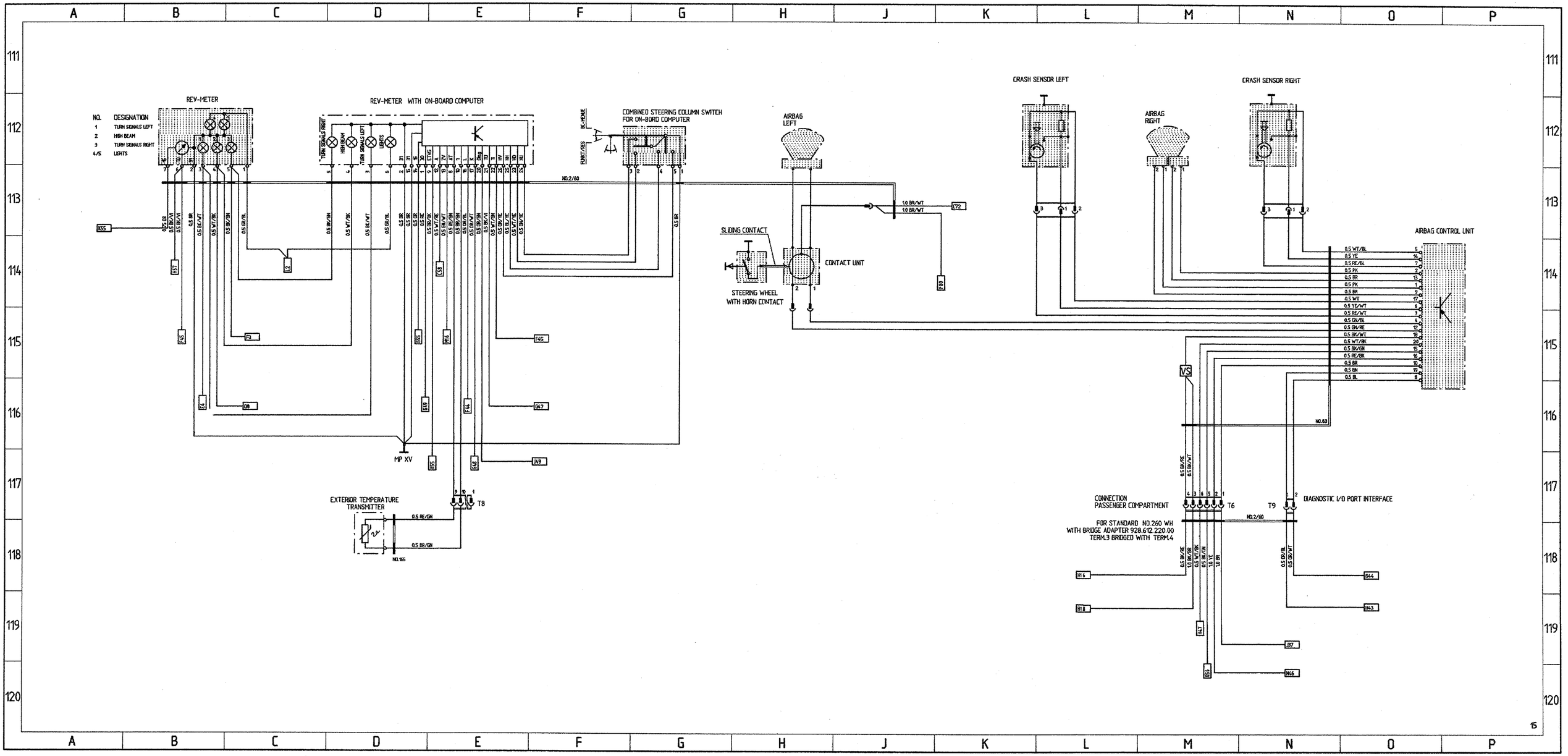

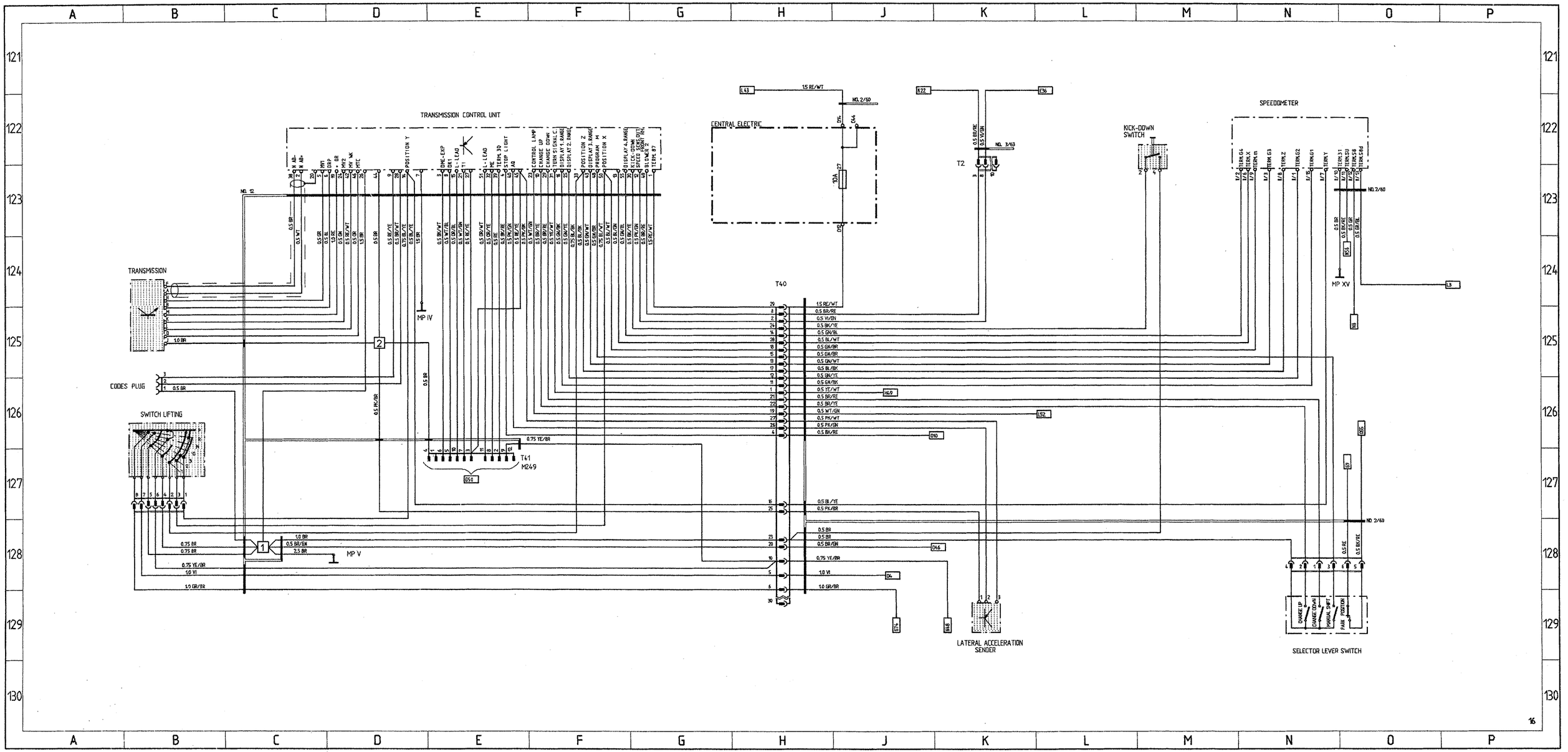

BK = BLACK WT = WHITE RE = RED GN = GREEN YE = YELLOW GR = GREY BR = BROWN BL = BLUE VI = VIOLET PK = PINK OR = ORANGE

Changes to the circuit diagram for the 911 Carrera 2/4, 1990 model

Sheet 5, D 50

The ground points for the DME control unit are not marked.
2.5 mm^2 lead, brown, to ground point IV.
1.5 mm^2 lead, brown, to ground point V.

Sheet 12

Control unit-transmission
The control unit is located beneath the left-hand seat.

Please alter the circuit diagram accordingly.

Printed in Germany – VIII, 1990

Wiring Diagram
Type 911 Carrera 2 and 4 Model 91

	Coordinates	
Sheet 1	1 - 10	Lights
Sheet 2	11 - 20	Alarm System, Central Locks, Mirror, Power Window Regulator, Inside Lights
Sheet 3	21 - 30	Heater, AC, Coolant Fan, Rear Window Defogger
Sheet 4	31 - 40	ABS, Porsche Dynamic AWD Control (Carrera 4)
Sheet 4a	31 - 40	ABS (Carrera 2)
Sheet 5	41 - 50	Motor, Ignition, Cruise Control
Sheet 6	51 - 60	Instruments, Sender, Central Informer, On-board computer
Sheet 7	61 - 70	Seats
Sheet 8	71 - 80	Rear Spoiler, Two-Tone Horns, Wipe- and Wash Cleaners, Sun Roof, Convertible Top
Sheet 9	81 - 90	Radio, Telephone
Sheet 10	91 - 100	Fog Light, Rear Fog Light
Sheet 11		Central Electric
Sheet 12		Construction Components
Sheet 13		Plug Connections, Ground Points, M-Numbers, Abbreviations
Sheet 14	101 - 110	Trailer Coupling
Sheet 15	111 - 120	Airbag
Sheet 16	121 - 130	Tiptronic (Carrera 2)

Wiring Diagram
Type 911 Carrera 2 and 4 Model 91

The wiring diagram consists of *15 individual wiring diagrams*, 1 sheet *construction components* and 1 sheet *plug connections and ground points*. These are divided into coordinate fields.

Each individual wiring diagram contains a part of the central-electrics box in a dashdotted frame.

This part of the central-electrics box shows all the lines and relays necessary for the individual wiring diagram.

The earth/ground points are identified by "MP" and their location is shown in a vehicle diagram.

The 10-pin connectors on the central-electrics box are clipped together out of 3 parts, the 20-pin connectors are clipped together out of 5 parts.

Part 1, with the moduled-on fastening lug, is the "starting element".

Parts 2,3 and 4 are "module elements".

The 10-pin connectors only contents one "module element".

Start- and module elements are identified by the numbers 1.....5.

Part 5 ist a "coding element".

The designations of the plug connections in the wiring diagram refer to the "starting element" from, for example, B 11.....15, and to the first module element from B 21.....25.

Printed in Germany – VIII, 1990

LIGHTS

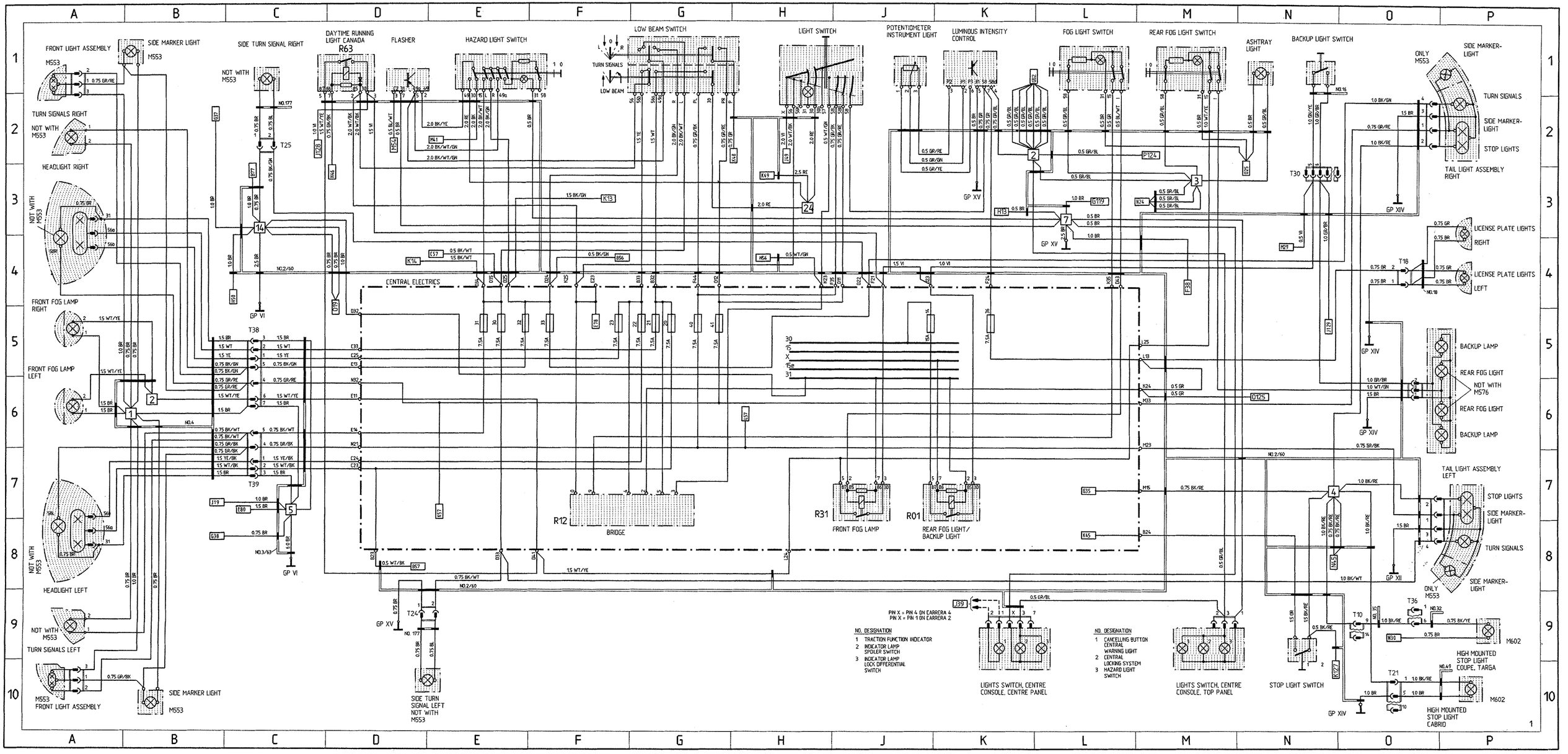
FRONT LIGHT ASSEMBLY
SIDE MARKER LIGHT
SIDE TURN SIGNAL RIGHT
DAYTIME RUNNING LIGHT CANADA
R63
FLASHER
HAZARD LIGHT SWITCH
LOW BEAM SWITCH
LIGHT SWITCH
POTENTIOMETER INSTRUMENT LIGHT
LUMINOUS INTENSITY CONTROL
FOG LIGHT SWITCH
REAR FOG LIGHT SWITCH
ASHTRAY LIGHT
BACKUP LIGHT SWITCH
TURN SIGNALS RIGHT
HEADLIGHT RIGHT
FRONT FOG LAMP RIGHT
FRONT FOG LAMP LEFT
HEADLIGHT LEFT
TURN SIGNALS LEFT
CENTRAL ELECTRICS
BRIDGE
FRONT FOG LAMP
REAR FOG LIGHT/ BACKUP LIGHT
SIDE TURN SIGNAL LEFT NOT WITH M553
LIGHTS SWITCH, CENTRE CONSOLE, CENTRE PANEL
LIGHTS SWITCH, CENTRE CONSOLE, TOP PANEL
STOP LIGHT SWITCH
TAIL LIGHT ASSEMBLY RIGHT
TAIL LIGHT ASSEMBLY LEFT
LICENSE PLATE LIGHTS RIGHT
LICENSE PLATE LIGHTS LEFT
BACKUP LAMP
REAR FOG LIGHT
HIGH MOUNTED STOP LIGHT COUPE, TARGA
HIGH MOUNTED STOP LIGHT CABRIO
PIN X = PIN 4 ON CARRERA 4
PIN X = PIN 1 ON CARRERA 2
NO. DESIGNATION
1 TRACTION FUNCTION INDICATOR
2 INDICATOR LAMP SPOILER SWITCH
3 INDICATOR LAMP LOCK DIFFERENTIAL SWITCH
NO. DESIGNATION
1 CANCELLING BUTTON CENTRAL WARNING LIGHT
2 CENTRAL LOCKING SYSTEM
3 HAZARD LIGHT SWITCH

911 Carrera 2/4 Model 91 Sheet 2

SEATS, ALARM SYSTEM, CENTRAL LOCKS, MIRROR, POWER WINDOW REGULATOR, INSIDE LIGHTS

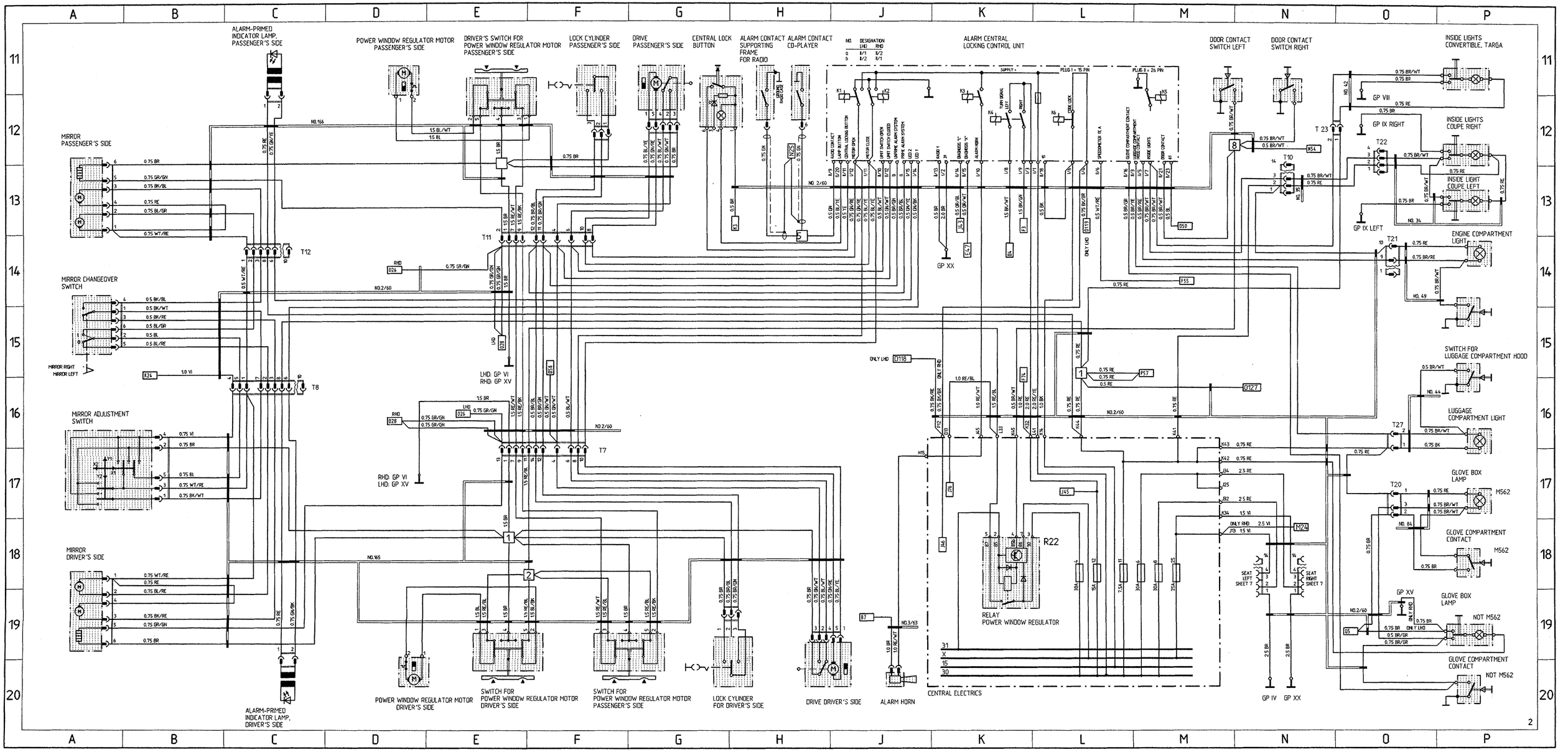

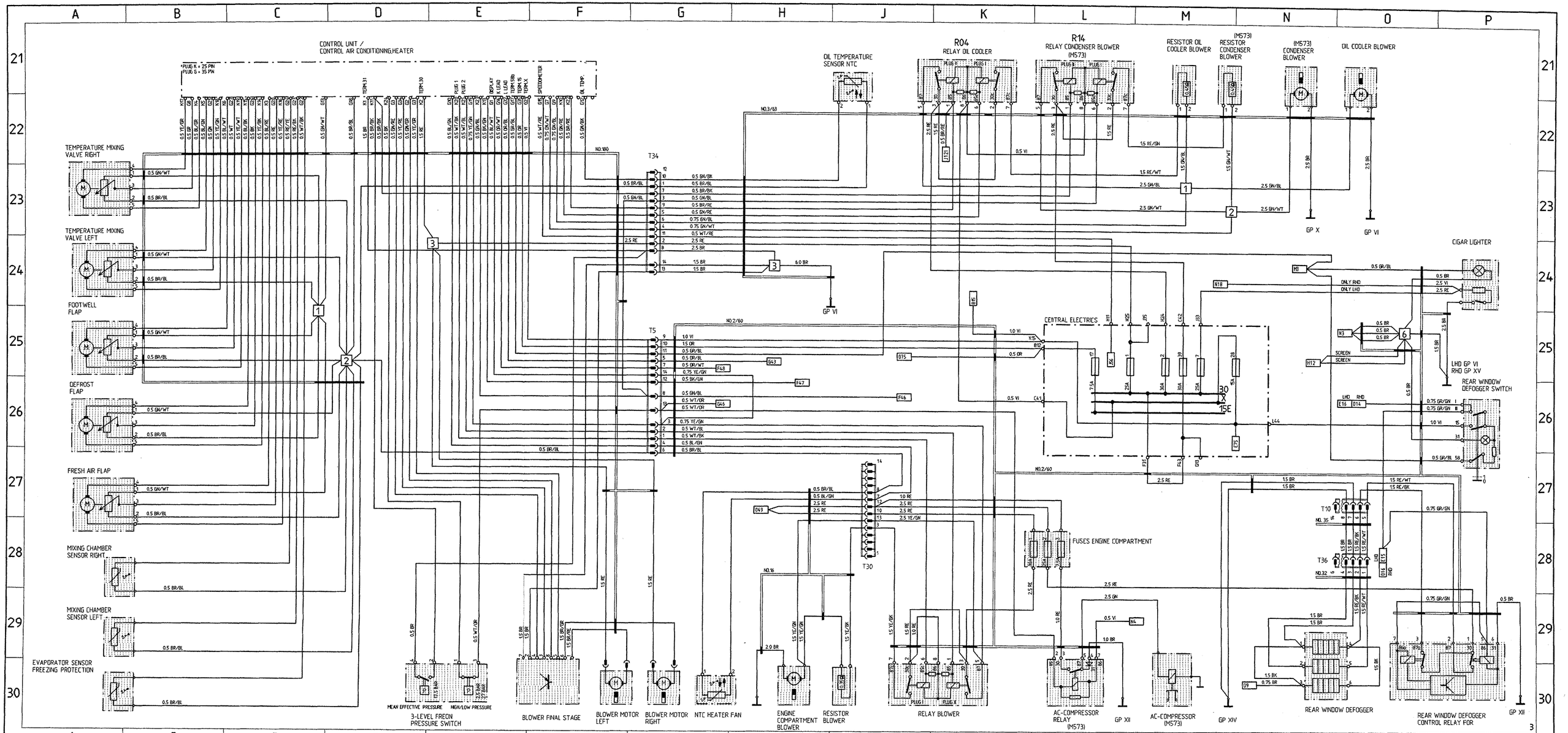

BK = BLACK WT = WHITE RE = RED GN = GREEN YE = YELLOW GR = GREY BR = BROWN BL = BLUE

911 Carrera 4 Model 91 Sheet 4

ABS, PORSCHE DYNAMIC AWD CONTROL

ABS HYDRAULIC UNIT

LOCKING DIFFERENTIAL VALVES TRANSVERSE LONGITUDINAL

PRESSURE WARNING SWITCH

CENTRL INFORMER

INSTRUMENT CLUSTER D=100

ABS CONTROL UNIT

VALVE RELAY
ABS SAFETY LAMP
DIFFERENTIAL WARNING LAMP
VOLTAGE VALVE RELAY
SOLENOID VALVE REAR AXLE
SOLENOID VALVE FR
SOLENOID VALVE FL
VOLTAGE MOTOR AND VALVE RELAY
ENGINE RELAY ACTUATION
VOLTAGE MOTOR
LOCKING DIFFERENTIAL VALVE, TRANSVERSE
LOCKING DIFFERENTIAL VALVE, LONGITUDINAL
VOLTAGE VALVE RELAY
STOP LIGHT SWITCH
ESD, FRONT LEFT
INPUT TE 61
DIFFERENTIAL FUNCTION INDICATOR LAMP
DIAGNOSIS "L"
DIAGNOSIS "K"
FULL LOCK SWITCH
TERM.30
TERM.15
SENDER SIGNAL LONGITUDINAL ACCELERATION
SUPPLY ACCELERATING SENSOR
SENSER SIGNAL LATERAL ACCELERATION
GROUND ACCELERATING SENSOR
GROUND SPEED SENSOR RR
SPEED SENSOR RR
GROUND SPEED SENSOR RL
SPEED SENSOR RL
GROUND SPEED SENSOR FR
SPEED SENSOR FR
GROUND SPEED SENSOR FL
SPEED SENSOR FL
GROUND CONTROL UNIT
GROUND SOLENOID VALVES
GROUND SOLENOID VALVES

R51 PUMP RELAY BRAKE-AMPLIFIER

CENTRAL ELECTRICS

WHEEL SPEED SENSOR

FL FR RL RR

COMBINATION LEAD

LATERAL ACCELERATION SENDER

LONGITUDINAL ACCELERATION SENDER

DIFFERENTIAL CONTROL BUTTON BRIDGING

ROTARY SWITCH FOR LOCK CONTROL

R34 ABS RELAY

BRAKE BOOSTER PUMP

LAMP CLUSTER, DASHBOARD MIDDLE

BK = BLACK WT = WHITE RE = RED GN = GREEN YE = YELLOW OR = ORANGE
GR = GREY BR = BROWN BL = BLUE VI = VIOLET PK = PINK

ABS

ABS HYDRAULIC UNIT

ABS CONTROL UNIT

CENTRL INFORMER

INSTRUMENT CLUSTER D=100

CENTRAL ELECTRICS

WHEEL SPEED SENSOR

R34
ABS RELAY

911 Carrera 2/4 Model 91 Sheet 5

MOTOR, FUEL, IGNITION, CRUISE CONTROL

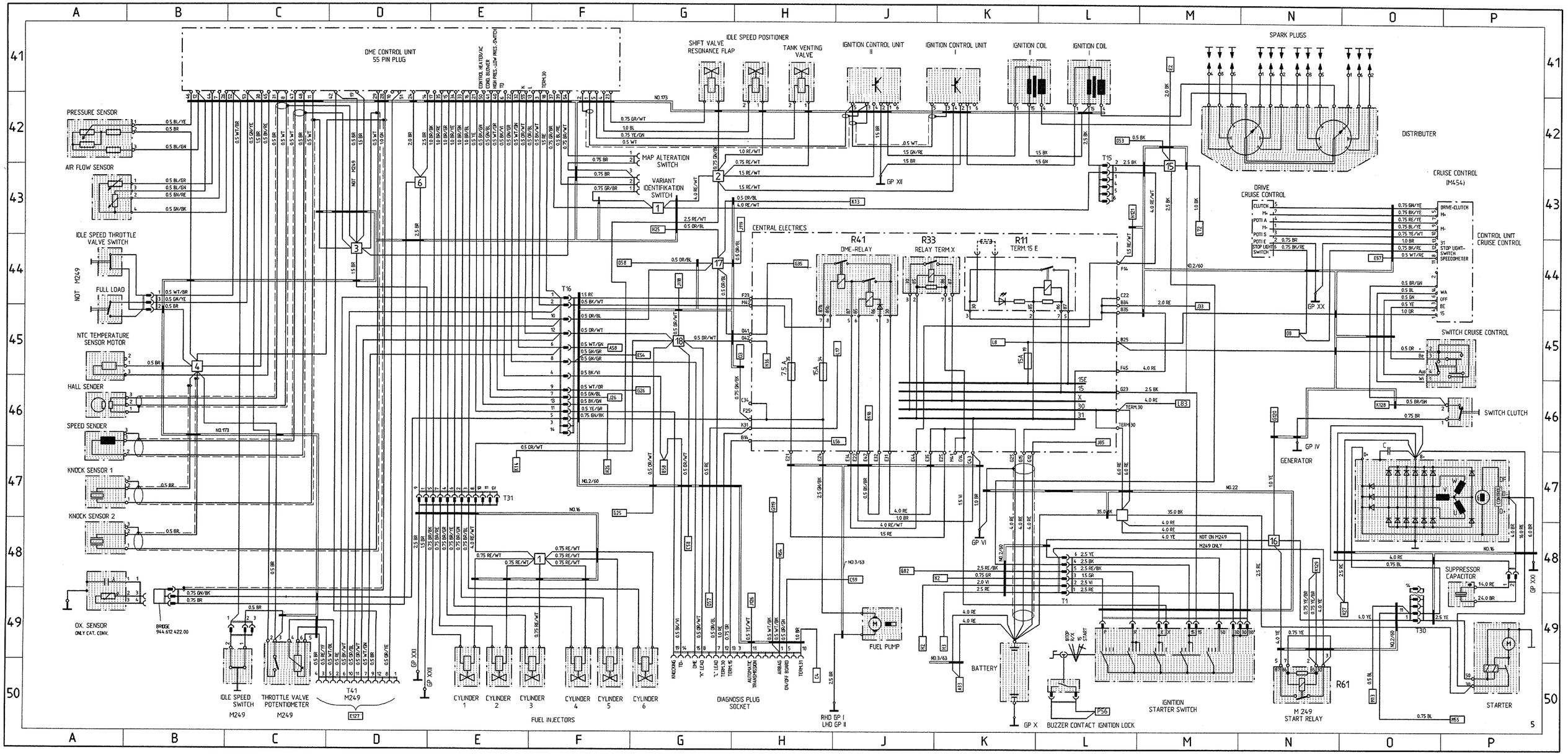

INSTRUMENTS AND SENDER

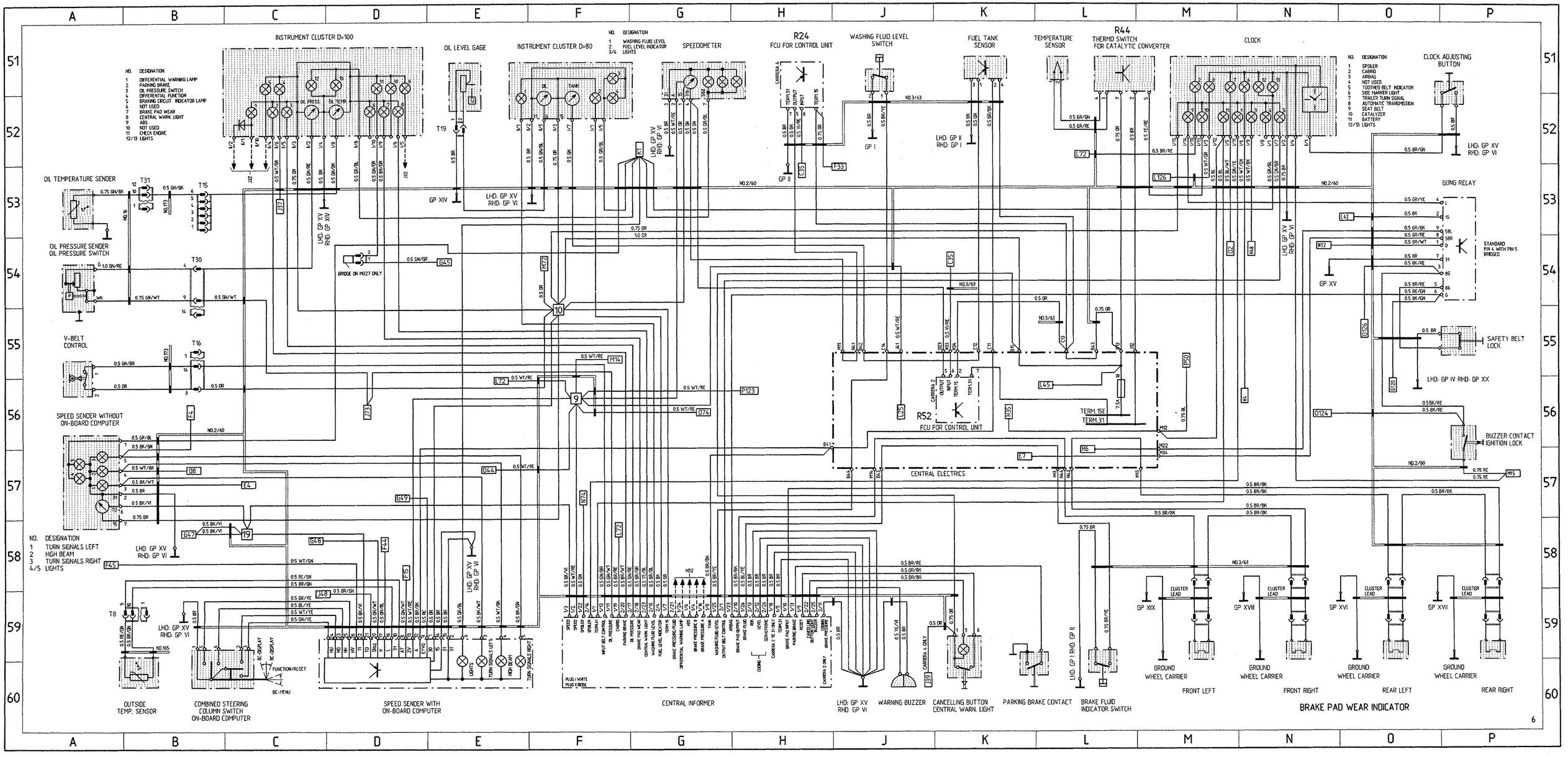

911 Carrera 2/4 Model 91 Sheet 7

SEATS

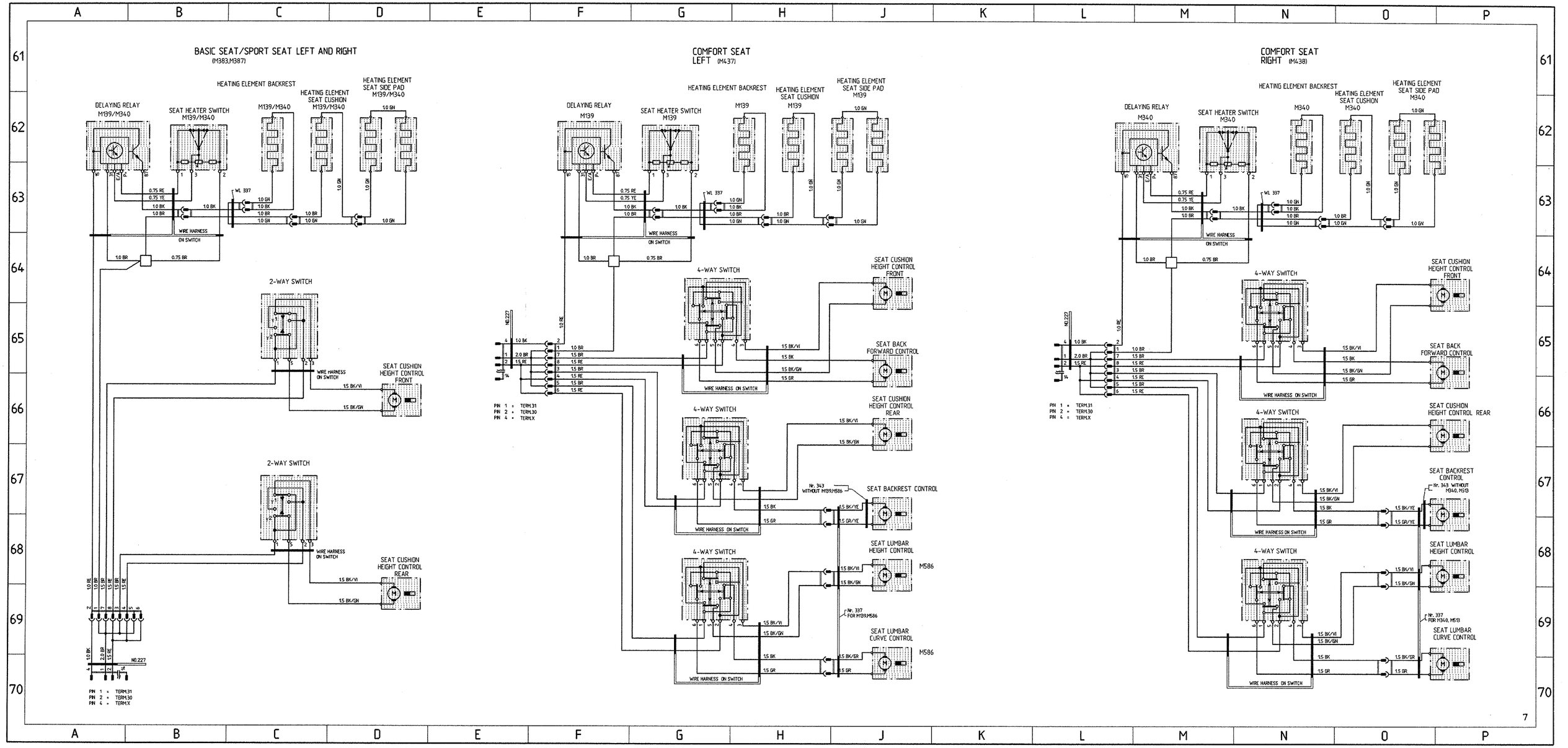

BK = BLACK WT = WHITE RE = RED GN = GREEN YE = YELLOW GR = GREY BR = BROWN BL = BLUE VI = VIOLET PK = PINK OR = ORANGE

911 Carrera 2/4 Model 91 Sheet 8

REAR SPOILER, TWO-TONE HORNS, WIPE- AND WASH CLEANERS, SUN ROOF, CONVERTIBLE TOP

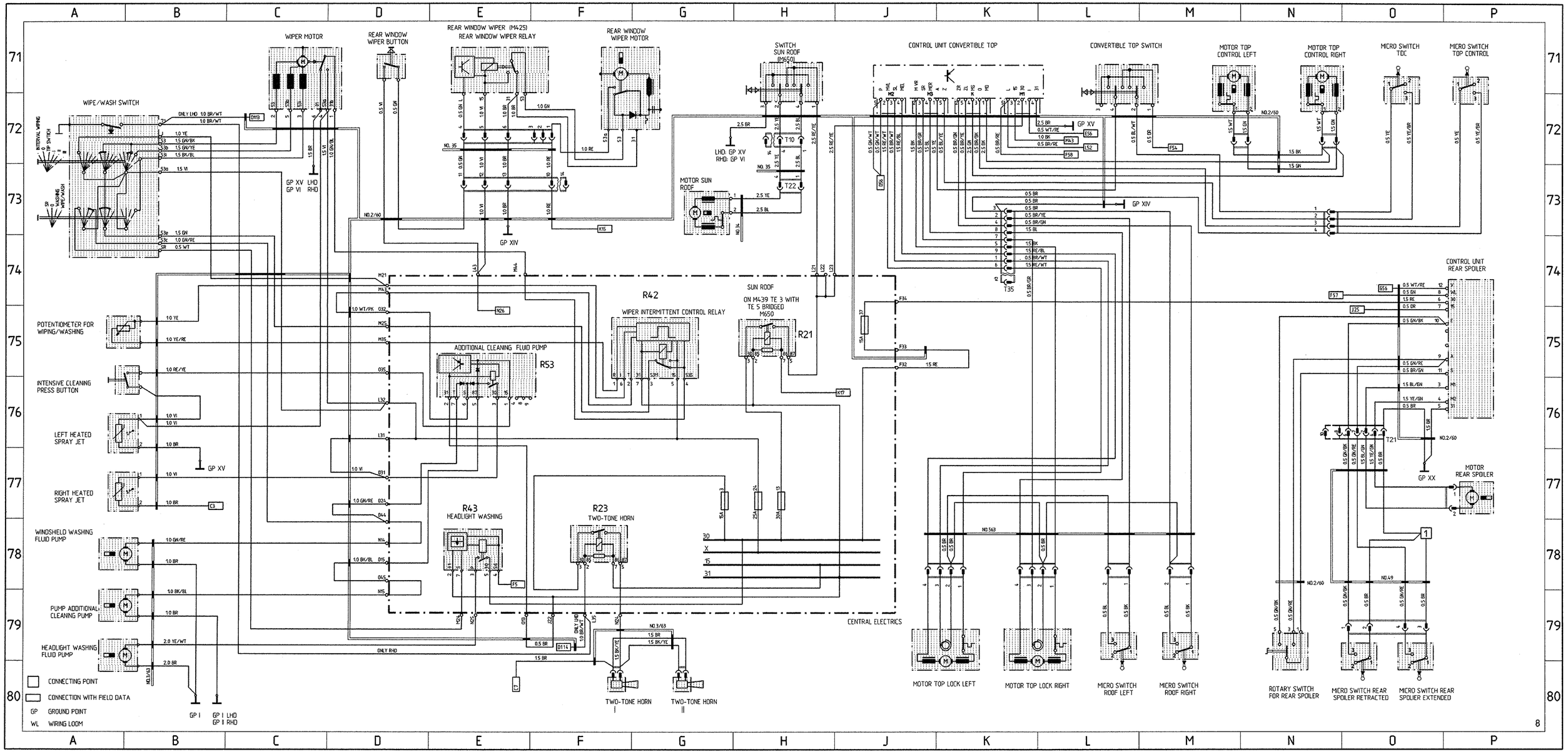

RADIO, TELEPHONE

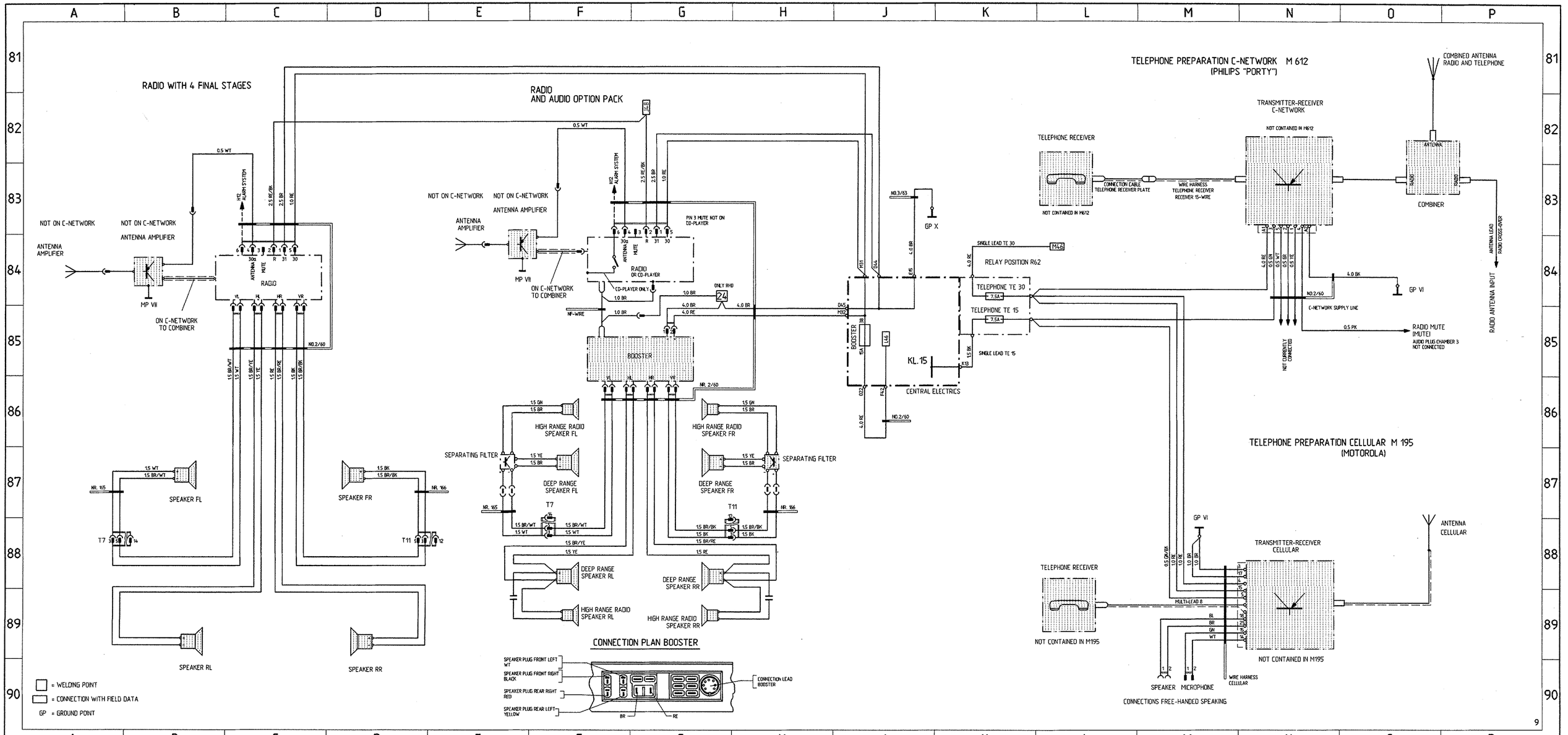

FOG LIGHT- AND REAR FOG LIGHT -WIRINGS

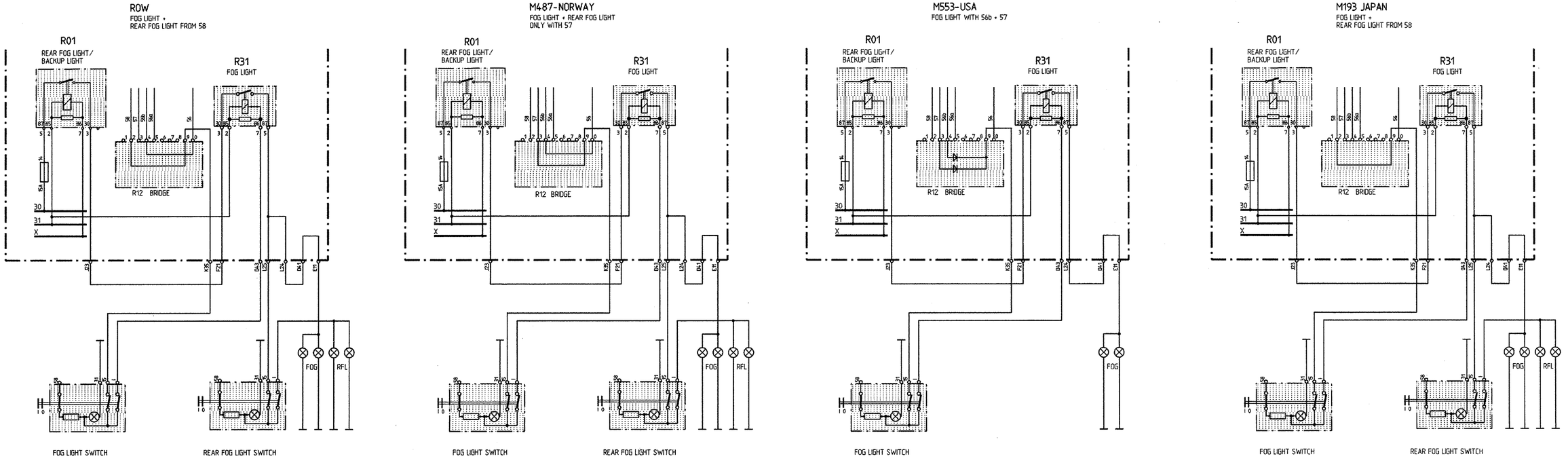

911 Carrera 2/4 Model 91 Sheet 11

CENTRAL ELECTRICS

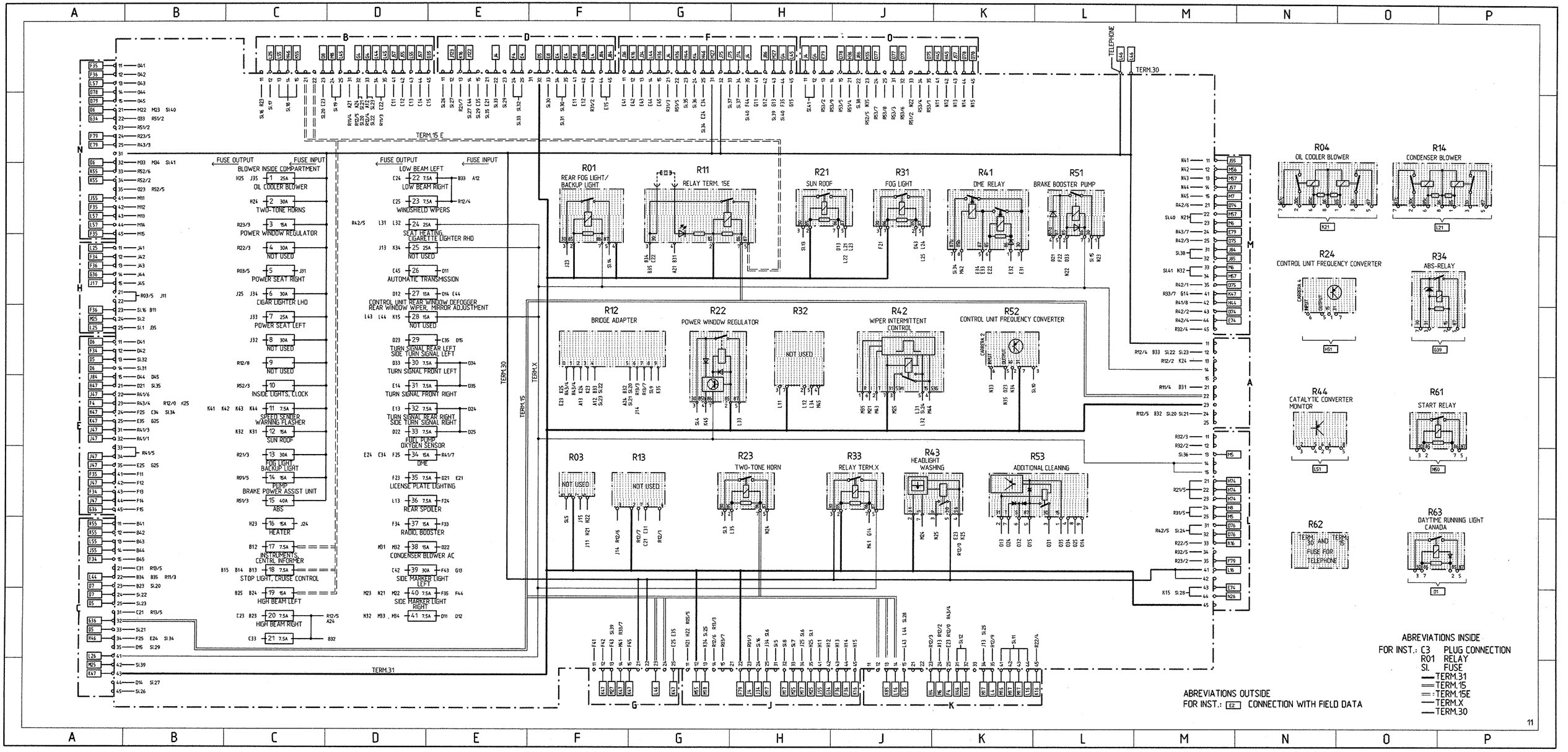

CONSTRUCTION COMPONENTS

DESIGNATION, FUNCTION	POSITION IN VEHICLE LHD	RHD	NOTE	FIELD IN WIRING DIAGRAMM
ABS RELAY	6cM	6cM	CENTRAL ELECTRICS	G39/40
ALARM HORN	3cL	3cL	IN WHEEL HOUSING FRONT RIGHT	J20
ANTENNA AMPLIFIER	7bL	7bQ	IN LUGGAGE COMPARTMENT	B84,E84
OUTSIDE TEMP. SENSOR	8bR	8bK	IN OUTSIDE MIRROW	B60
FLASHER	7dN	7dN	IN CENTRE CONSOLE	D1
BOOSTER	9eM	9eM	UNDER THE SEAT RIGHT	F/G85
STOP LIGHT SWITCH	6dP	6dM	AT THE BRAKE PEDAL BELOW THE FLOOR PANEL	N9
DIAGNOSIS CONNECTION	7cL	7cQ	IN PASSENGER'S FOOTWELL	G/H50
DME RELAY	6cM	6cM	CENTRAL ELECTRICS	J44
DME CONTROL UNIT	9eP	9eP	UNDER THE SEAT LEFT	B-F41
SPEED SENDER	15cP	15cP	BY ENGINE LEFT	A47
THROTTLE VALVE POTENTIOMETER, AUTOM. TRANSMISSION	15bN	15bN	ON THROTTLE VALVE ASSEMBLY	C50
THROTTLE VALVE SWITCH, MANUAL TRANSMISSION	15bN	15bN	ON THROTTLE VALVE ASSEMBLY	A44/45
PRESSURE SENSOR	10eP	10eP	UNDER THE SEAT LEFT	A42
PRESSURE WARNING SWITCH	1dD	1dD	IN LUGGAGE COMPARTMENT	F31
PRESSURE SWITCH AIR CONDITIONING SYSTEM	6bQ	—	IN LUGGAGE COMPARTMENT	E30
TWO-TONE HORN I	3cL	3cL	IN WHEEL HOUSING FRONT RIGHT	F80
TWO-TONE HORN II	3cL	3cL	IN WHEEL HOUSING FRONT RIGHT	G80
SEPARATING FILTER FL	9dQ	9dQ	UNDER THE DOOR TRIM PANEL	E87
SEPARATING FILTER FR	9dL	9dL	UNDER THE DOOR TRIM PANEL	H87
CRASH SENSOR RIGHT	4cM	—	IN LUGGAGE COMPARTMENT	G112/113
CRASH SENSOR LEFT	4cP	—	IN LUGGAGE COMPARTMENT	E112/113
BLOWER FINAL STAGE	6bN	6bN	IN LUGGAGE COMPARTMENT	F30
BLOWER ENGINE COMPARTMENT	16cO	16cO	ON ENGINE	H30
BLOWER MOTOR RIGHT	6cM	6cM	IN LUGGAGE COMPARTMENT	G30
BLOWER MOTOR LEFT	6cP	6cP	IN LUGGAGE COMPARTMENT	F30
GONG RELAY	6cP	—	BY STEERING COLUMN LEFT	P53/54
HALL SENDER	17cO	17cO	ON DISTRIBUTOR	A46
REAR WINDOW WIPER RELAY	15bO	15bO	ON REAR WINDOW WIPER MOTOR	E71
HYDRAULIC UNIT ABS	3dP	3dP	IN LUGGAGE COMPARTMENT	C32
V-BELT CONTROL	17dO	17dO	ON ENGINE	A55/56
MAP ALTERATION- SWITCH	9eP	9eP	UNDER THE SEAT LEFT	G42
KICK-DOWN SWITCH	6dO	6dM	BY ACCELERATOR PEDAL UNDER FLOOR PANEL	M122
KNOCK SENSOR 1	15cP	15cP	BY ENGINE LEFT	A47
KNOCK SENSOR 2	16cN	16cN	BY ENGINE TOP	A48
CONDENSER BLOWER	2dQ	2dQ	IN WHEEL HOUSING FRONT LEFT	N21
FUEL PUMP	6eM	6eP	BEHIND THE BASE	J49
CLUTCH SWITCH CRUISE CONTROL	6dP	6dN	BY CLUTCH PEDAL UNDER FLOOR PANEL	P46
LONGITUDINAL ACCELERATION SENDER	7dN	7dN	IN CENTRE CONSOLE	E40
LOCKING DIFFERENTIAL VALVES, LONGIT. AND TRANSVERSE	3dM	3dM	IN LUGGAGE COMPARTMENT	E31
IDLE SPEED SWITCH AUTOMATIC TRANSMISSION	15bN	15bN	ON ENGINE	C50
IDLE SPEED POSITIONER	15bN	15bN	IN ENGINE COMPARTMENT	H41
AIR FLOW SENSOR	16bO	16bO	ON ENGINE	A43
MICRO SWITCH ROOF RIGHT	9aN	9aN	AT CONVERTIBLE TOP FRAME	M79
MICRO SWITCH ROOF LEFT	9aO	9aO	AT CONVERTIBLE TOP FRAME	L79
MICRO SWITCH REAR SPOLIER EXTENDED	16bP	16bP	ON TAILGATE	D79
MICRO SWITCH REAR SPOILER RETRACTED	16bP	16bP	ON TAILGATE	D79
MICRO SWITCH TDC	12cL	12cL	BEHIND SIDE PANEL COVERING	D71
MICROSWITCH FOR TOP CONTROL	12cL	12cL	BEHIND SIDE PANEL COVERING	P71
MOTOR SUN ROOF	12aN	12aN	IN ROOF	G73
MOTOR TOP CONTROL RIGHT	15cN	15cN	BEHIND REAR SEAT	N71
MOTOR TOP CONTROL LEFT	15cO	15cO	BEHIND REAR SEAT	M71
MOTOR TOP LOCK RIGHT	9aN	9aN	AT CONVERTIBLE TOP FRAME	K/L79
MOTOR TOP LOCK LEFT	9aO	9aO	AT CONVERTIBLE TOP FRAME	J/K79
REAR FOG LIGHT CUTOUT RELAY	17dN	17dN	BEHIND REAR PANEL	A108
NTC HEATER FAN	16cP	16cP	IN ENGINE COMPARTMENT	G30
OIL PRESSURE SENDER/SWITCH	14cN	14cN	ON ENGINE	A54
OIL COOLER BLOWER	2dL	2dL	IN WHEEL HOUSING FRONT RIGHT	D21
OIL LEVEL GAGE	12cK	12cK	IN WHEEL HOUSING REAR RIGHT	E51/52

DESIGNATION, FUNCTION	POSITION IN VEHICLE LHD	RHD	NOTE	FIELD IN WIRING DIAGRAMM
OIL TEMPERATURE SENDER FOR INSTRUMENT	14cN	14cN	ON ENGINE	A53
OIL TEMPERATURE SENDER FOR OIL COOLER BLOWER	2dL	2dL	IN WHEEL HOUSING FRONT RIGHT	J21
SWITCH LIFTING	12dO	12dO	ON GEARBOX	D-F129
BRAKE BOOSTER PUMP	1dD	1dD	IN LUGGAGE COMPARTMENT	H39/40
LATERAL ACCELERATION SENDER ABS	7dN	7dN	IN CENTRE CONSOLE	D40
LATERAL ACCELERATION SENDER AUTOMATIC TRANSMISSION	7dN	7dN	IN CENTRE CONSOLE	K129
CONTROL RELAY REAR WINDOW DEFOGGER	16cP	16cP	CARRIER PLATE IN ENGINE COMPARTMENT	O/P29/30
RELAY CONDENSER BLOWER	6cM	6cM	CENTRAL ELECTRICS	L21
RELAY AC COMPRESSOR	16cP	16cP	CARRIER PLATE IN ENGINE COMPARTMENT	L30
RELAY TWO-TONE HORN	6cM	6cM	CENTRAL ELECTRICS	F78
RELAY POWER WINDOW REGULATOR	6cM	6cM	CENTRAL ELECTRICS	K18/19
RELAY FREQUENCY TRANSFORMER	6cM	6cM	CENTRAL ELECTRICS	K56/H51
RELAY BLOWER ENGINE COMPARTMENT	16cP	16cP	CARRIER PLATE IN ENGINE COMPARTMENT	J/K30
RELAY STARTER AUTOMATIC TRANSMISSION	6cM	6cM	CENTRAL ELECTRICS	N50
RELAY ADDITIONAL CLEANING FLUID PUMP	6cM	6cM	CENTRAL ELECTRICS	E75/76
RELAY THERMO SWITCH CATALYTIC CONVERTER	6cM	6cM	CENTRAL ELECTRICS	L/M51
RELAY TERM.X	6cM	6cM	CENTRAL ELECTRICS	K44
RELAY TERM.15 E	6cM	6cM	CENTRAL ELECTRICS	K/L44
RELAY REAR FOG LIGHT- BACKUP LIGHT	6cM	6cM	CENTRAL ELECTRICS	J/K7
RELAY FRONT FOG LAMP	6cM	6cM	CENTRAL ELECTRICS	J7
RELAY OIL COOLER BLOWER	6cM	6cM	CENTRAL ELECTRICS	K21
RELAY BRAKE BOOSTER PUMP	6cM	6cM	CENTRAL ELECTRICS	H34/35
RELAY SUN ROOF	6cM	6cM	CENTRAL ELECTRICS	H75
RELAY DAYTIME RUNNING LIGHT CANADA	6cM	6cM	CENTRAL ELECTRICS	D1
BACKUP LIGHT SWITCH	14dN	14dN	BY TRANSMISSION RIGHT	N1
SHIFT VALVE RESONANCE FLAP	15bN	15bN	ON ENGINE	G41
WINDSHIELD WASHING FLUID PUMP	3cQ	3cQ	BY WASHING FLUID RESERVOIR IN WHEEL HOUSING FL	A78
FUSES ENGINE COMPARTMENT	16cP	16cP	CARRIER PLATE IN ENGINE COMPARTMENT	L28
HEADLIGHT CLEANER PUMP	3cQ	3cQ	BY WASHING FLUID RESERVOIR IN WHEEL HOUSING FL	A79/80
HEADLIGHT CLEANER RELAY	6cM	6cM	CENTRAL ELECTRICS	E78
STARTER	14dN	14dN	BY CLUTCH HOUSING RIGHT	P49/50
DRIVE CRUISE CONTROL	15cO	15cO	ON ENGINE	N43/44
CONTROL UNIT ABS	2dM	2dM	IN LUGGAGE COMPARTMENT	A33-38
CONTROL UNIT AIRBAG	6cO	—	ON INTRUMENT PANEL	J114/115
CONTROL UNIT ALARM SYSTEM/CENTRAL LOCKING SYSTEM	9eM	9eM	UNDER THE SEAT RIGHT	J-M12
CONTROL UNIT AUTOMATIC TRANSMISSION	10dP	10dP	UNDER THE SEAT LEFT	C-G122
CONTROL UNIT CONVERTIBLE TOP	6cP	6cM	ON INTRUMENT PANEL	J/K71
CONTROL UNIT INSTRUMENT LIGHT	7bQ	7bQ	IN LUGGAGE COMPARTMENT LEFT	K1
CONTROL UNIT REAR SPOILER	9eN	9eN	UNDER THE SEAT RIGHT	P74-76
CONTROL UNIT HEATING, AIR CONDITIONING	7cO	7cN	ON INTRUMENT PANEL	B-F21
CONTROL UNIT CRUISE CONTROL	9eN	9eN	UNDER THE SEAT RIGHT	P43/44
BUZZER CONTACT	7cP	7cM	ON IGNITION LOCK	P56
FUEL LEVEL SENDER	5cM	5cP	IN FUEL TANK	K51
TANK VENTING VALVE	15cN	15cN	BY ENGINE TOP	H41
TEMPERATURE MOTOR	15cP	15cP	BY ENGINE LEFT	A45
VARIANT IDENTIFIKATION SWITCH	9eP	9eP	UNDER THE SEAT LEFT	G43
RESISTOR BLOWER	16dP	16dP	IN ENGINE COMPARTMENT	J30
RESISTOR FOR BLOWER CONDENSER	2dQ	2dQ	IN WHEEL HOUSING FRONT LEFT	M21
RESISTOR OIL COOLER BLOWER	2dL	2dL	IN WHEEL HOUSING FRONT RIGHT	M21
WARNING BUZZER	7cP	7cP	ON INTRUMENT PANEL	J60
WIPER INTERMITTENT CONTROL RELAY	6cM	6cM	CENTRAL ELECTRICS	F/G75
CENTRAL ELECTRICS	6cM	6cM	IN LUGGAGE COMPARTMENT	—
CENTRL INFORMER	6cP	6cP	ON STEERING COLUMN	H32,F/G/H59
IGNITION CONTROL UNIT I	15cP	15cP	IN ENGINE COMPARTMENT LEFT	K41
IGNITION CONTROL UNIT II	15cP	15cP	IN ENGINE COMPARTMENT LEFT	J41
IGNITION COIL I	15cQ	15cQ	IN ENGINE COMPARTMENT LEFT	L41
IGNITION COIL II	15cQ	15cQ	IN ENGINE COMPARTMENT LEFT	K41
ADDITIONAL CLEANING FLUID PUMP	4cM	4cQ	IN LUGGAGE COMPARTMENT	A79

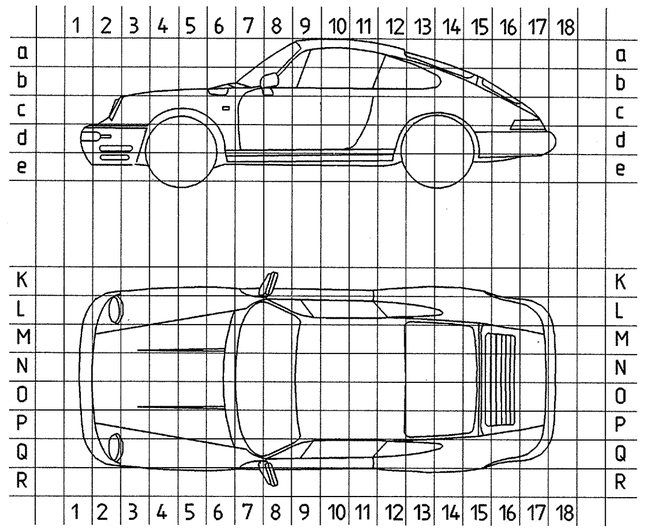

12

PLUG CONNECTIONS, GROUND POINTS, ABBREVIATIONS

PLUG CONNECTIONS

CODE	NUMBER OF PINS	DESIGNATION, FUNCTION	POSITION IN VEHICLE LEFT-HAND DRIVE	POSITION IN VEHICLE RIGHT-HAND DRIVE	NOTE	FIELD
T1	6	IGNITION LOCK	6cP	6cM	BY STEERING COLUMN LEFT	L48
T2	10	ABS	6cL	6cL	IN LUGGAGE COMPARTMENT RIGHT	C36/37, K122
T5	14	HEATER, AIR CONDITIONER	6cM	6cM	UNDER INSTRUMENT PANEL RIGHT	G25/26
T6	6	AIRBAG	7dN	7dN	IN CENTRE CONSOLE	F/G117
T7	14	DOOR DRIVER'S SIDE	6cQ	6cL	UNDER INSTRUMENT PANEL LEFT	A88,F88,E/F17
T8	10	DOOR DRIVER'S SIDE	6cQ	6cL	UNDER INSTRUMENT PANEL LEFT	C16,B59
T9	2	AIRBAG	7dN	7dN	IN CENTRE CONSOLE	G117
T10	14	REAR WINDOW SHELF	12cL	12cL	BEHIND SIDE PANEL COVERING	D9,N13,027,E/F73,H72
T11	12	DOOR PASSENGER'S SIDE	6cL	6cQ	UNDER INSTRUMENT PANEL RIGHT	E14,D88,H88
T12	10	DOOR PASSENGER'S SIDE	6cL	6cQ	UNDER INSTRUMENT PANEL RIGHT	C14
T15	6	DME	9eP	9eP	UNDER THE SEAT LEFT	L43,C14,B53
T16	14	DME	9eP	9eP	UNDER THE SEAT LEFT	F45/46,B55
T18	2	LICENSE PLATE LIGHTS	17dL	17dL	TAIL LIGHTS RIGHT	D4
T19	2	OIL LEVEL GAGE	15cM	15cM	IN ENGINE COMPARTMENT RIGHT	E52
T20	3	GLOVE BOX LAMP AIRBAG	6cL	—	UNDER INSTRUMENT PANEL RIGHT	D17
T21	10	TAILGATE	15cL	15cL	IN ENGINE COMPARTMENT RIGHT	N76,013,D10
T22	4	INSIDE LIGHTS, SUN ROOF	15bM	15bM	BELOW THE PARCEL TRAY	H73,D12
T23	2	INSIDE LIGHTS CONVERTIBLE, TARGA	6cQ	6cQ	UNDER INSTRUMENT PANEL LEFT	D12
T24	2	SIDE TURN SIGNAL LEFT	7bQ	7bQ	IN LUGGAGE COMPARTMENT ON SIDE MEMBER LEFT	D/E9
T25	2	SIDE TURN SIGNAL RIGHT	7bL	7bL	IN LUGGAGE COMPARTMENT ON SIDE MEMBER RIGHT	C2
T27	2	LUGGAGE COMPARTMENT LIGHT	7bL	7bL	IN LUGGAGE COMPARTMENT ON SIDE MEMBER RIGHT	D16
T30	14	NO. 16 MOTOR	16cP	16cP	CARRIER PLATE IN ENGINE COMPARTMENT	N/03,J27/28,048/49,B54
T31	12	MOTOR, DME	16cP	16cP	CARRIER PLATE IN ENGINE COMPARTMENT	D/E47,B53
T34	14	HEATER, AIR CONDITIONER	6cM	6cM	IN LUGGAGE COMPARTMENT RIGHT	G23/24
T35	12	CONVERTIBLE TOP	12cL	12cL	BEHIND SIDE PANEL COVERING	K73/74
T36	6	REAR WINDOW	15bM	15bM	BELOW THE PARCEL TRAY	D9,D28
T38	7	NO.4, FRONT LIGHTS	3cL	3cL	IN WHEEL HOUSING FRONT RIGHT	C5/6
T39	5	NO.4, FRONT LIGHTS	3cL	3cL	IN WHEEL HOUSING FRONT RIGHT	C6/7
T40	30	AUTOMATIC TRANSMISSION	9eP	9eP	UNDER THE SEAT LEFT	H124/125
T41	12	AUTOMATIC TRANSMISSION	9eP	9eP	UNDER THE SEAT LEFT	C/D50,E127

M - NUMBERS

M 139	ADJUSTABLE SEAT HEATING, LEFT SEAT
M 193	JAPAN VERSION
M 249	AUTOMATIC TRANSMISSION
M 340	ADJUSTABLE SEAT HEATING, RIGHT SEAT
M 383	SPORT SEAT LEFT ELECTRIC HEIGHT ADJUSTMENT
M 387	SPORT SEAT RIGHT ELECTRIC HEIGHT ADJUSTMENT
M 425	REAR WINDOW WIPER
M 437	COMFORT SEAT LEFT
M 438	COMFORT SEAT RIGHT
M 439	ELECTRIC CONVERTIBLE TOP
M 454	CRUISE CONTROL
M 513	LUMBAR SUPPORT SEAT RIGHT
M 553	USA - CANADA VERSION
M 562	AIRBAG
M 573	AIR CONDITIONING SYSTEM
M 576	WITHOUT REAR FOG LIGHT
M 586	LUMBAR SUPPORT SEAT LEFT
M 602	HIGH MOUNTED STOP LIGHT
M 650	SUN ROOF
M 659	ON-BOARD COMPUTER

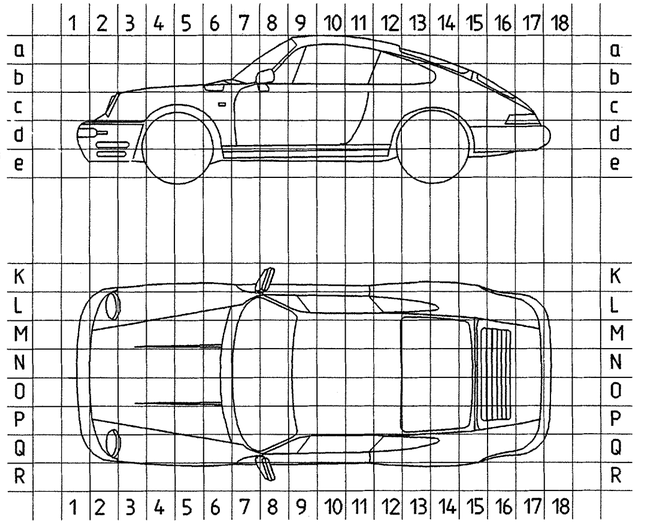

GROUND POINTS

CODE	NOTE	POSITION IN VEHICLE LEFT-HAND DRIVE
GP I	LUGGAGE COMPARTMENT, WHEEL HOUSING LEFT	2cP
GP II	LUGGAGE COMPARTMENT, WHEEL HOUSING RIGHT	2cM
GP III	ON FIREWALL	—
GP IV	GROUND FOR POWER CONSUMERS, UNDER SEAT LEFT	11eP
GP V	ELECTRONICS, UNDER SEAT LEFT	10eP
GP VI	CENTRAL ELECTRICS, ON SIDE MEMBER RIGHT	6bL
GP VII	ANTENNA AMPLIFIER ON SIDE MEMBER LEFT	7bL
GP VIII	INSIDE LIGHT CONVERTIBLE, ROOF CENTRE FRONT	9aN
GP IX	INSIDE LIGHT, ROOF RIGHT	11aL
GP IX	INSIDE LIGHT, ROOF LEFT	11aP
GP X	BATTERY, LUGGAGE COMPARTMENT LEFT	3eP
GP XI	GROUND STRAP (STARTER, TRANSMISSION, ENGINE, BODY)	14cM
GP XII	ENGINE COMPARTMENT REAR LEFT	15cQ
GP XIII	MOTOR LEFT	15cQ
GP XIV	ENGINE COMPARTMENT REAR RIGHT	15cL
GP XV	INSTRUMENTS, SIDE MEMBER LEFT	7bQ
GP XVI	COMBINED LEAD REAR LEFT	13dP
GP XVII	COMBINED LEAD REAR RIGHT	12dM
GP XVIII	COMBINED LEAD FRONT RIGHT	4cM
GP XIX	COMBINED LEAD FRONT LEFT	4cP
GP XX	SEAT CROSS MEMBER, UNDER SEAT RIGHT	8eL
GP XXI	GROUND FOR POWER CONSUMERS, CONNECTION CRANK CASE	16cN0
GP XXII	ELECTRONICS, CONNECTION CRANK CASE	16cN0

ABBREVIATIONS

CODE	MEANING	CODE	MEANING
ABS	ANTILOCK BRAKING SYSTEM	PIN	PIN
AC	AIR CONDITIONING SYSTEM	POT	POTENTIOMETER
SS	SPEED SENSOR	PSD	PORSCHE LIMITED SLIP DIFFERENTIAL
DEF	DEFROST	RDK	TIRE PRESSURE CONTROL
ESO	ENGINE-SPEED SENSOR OUTPUT	ROW	REST OF WORLD
DME	DIGITAL ENGINE ELECTRONICS	RHD	RIGHT-HAND DRIVE
EZK	ELECTRIC IGNITION SYSTEM WITH KNOCK CONTROL	CL	CLOSE
FCU	FREQUENCY CONVERTER UNIT	SA	SAUDI ARABIA
RA	REAR AXLE	CU	CONTROL UNIT
HF	HIGH FREQUENCY	WP	WELD POINT
RL	REAR LEFT	HCS	HEADLIGHT CLEANING SYSTEM
RR	REAR RIGHT	PL	PLUG
IC	INSTRUMENT CLUSTER	DP	DISCONNECTING POINT
TE	TERMINAL	USA	USA
SCS	COMBINED STEERING COLUMN SWITCH	FA	FRONT AXLE
WL	WIRING LOOM	FL	FRONT LEFT
LED	LIGHT-EMITTING DIODE	FR	FRONT RIGHT
LHD	LEFT-HAND DRIVE	CP	CONNECTING POINT
GP	GROUND POINT	WW	WORLDWIDE
LF	LOW FREQUENCY	CES	CENTRAL ELECTRICS
FOG	FOG LIGHT	ADL	ADDITIONAL DRIVING LIGHTS
NO	NUMBER	CLS	CENTRAL LOCKING SYSTEM
RFL	REAR FOG LIGHT		
NTC	NEGATIVE TEMPERATURE COEFFICIENT		
OP	OPEN		

ADDITIONAL WIRING DIAGRAM TRAILER COUPLING

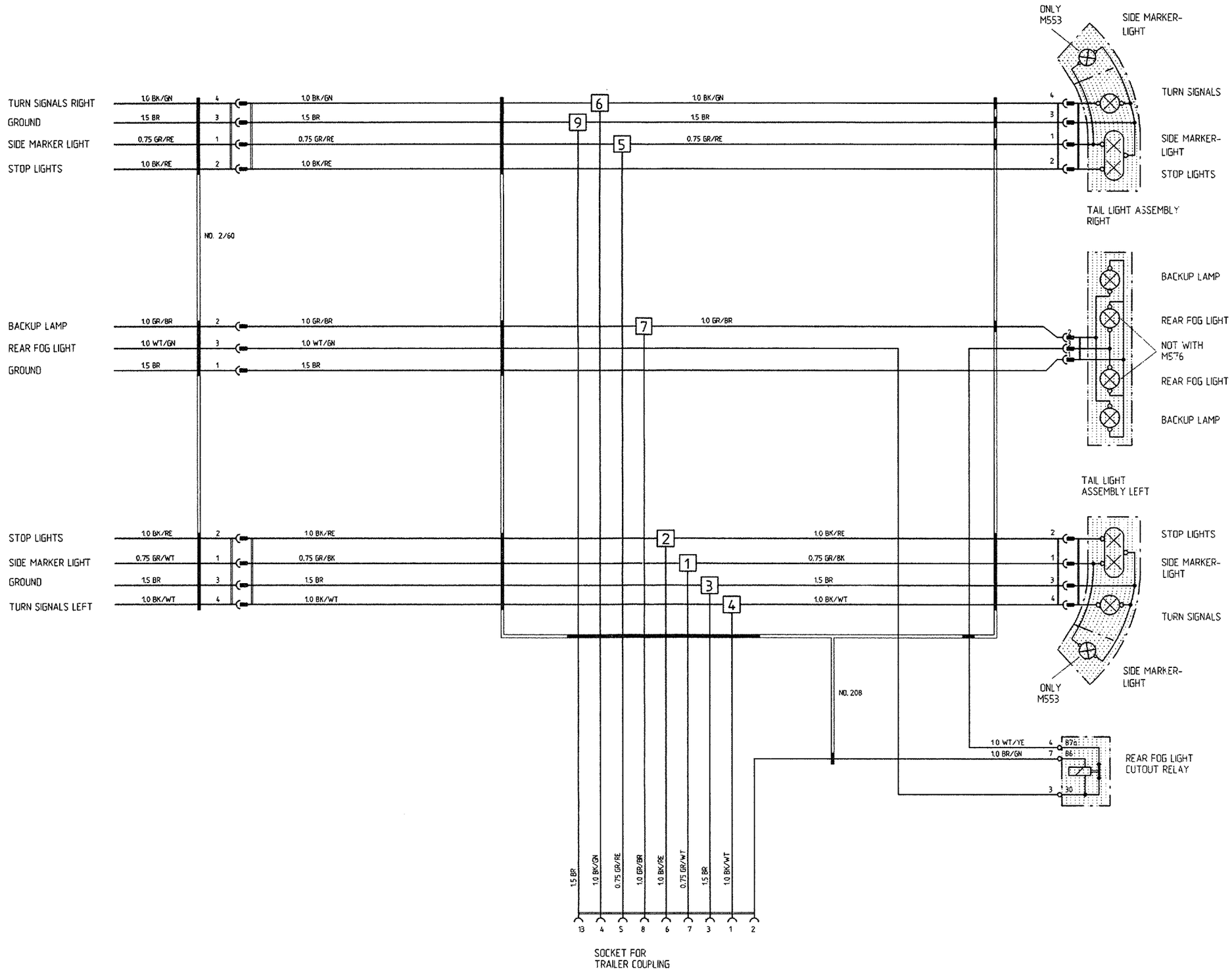

FLASHER
SEE 97-73

INDICATOR LIGHTS
SEE 97-85

AIRBAG

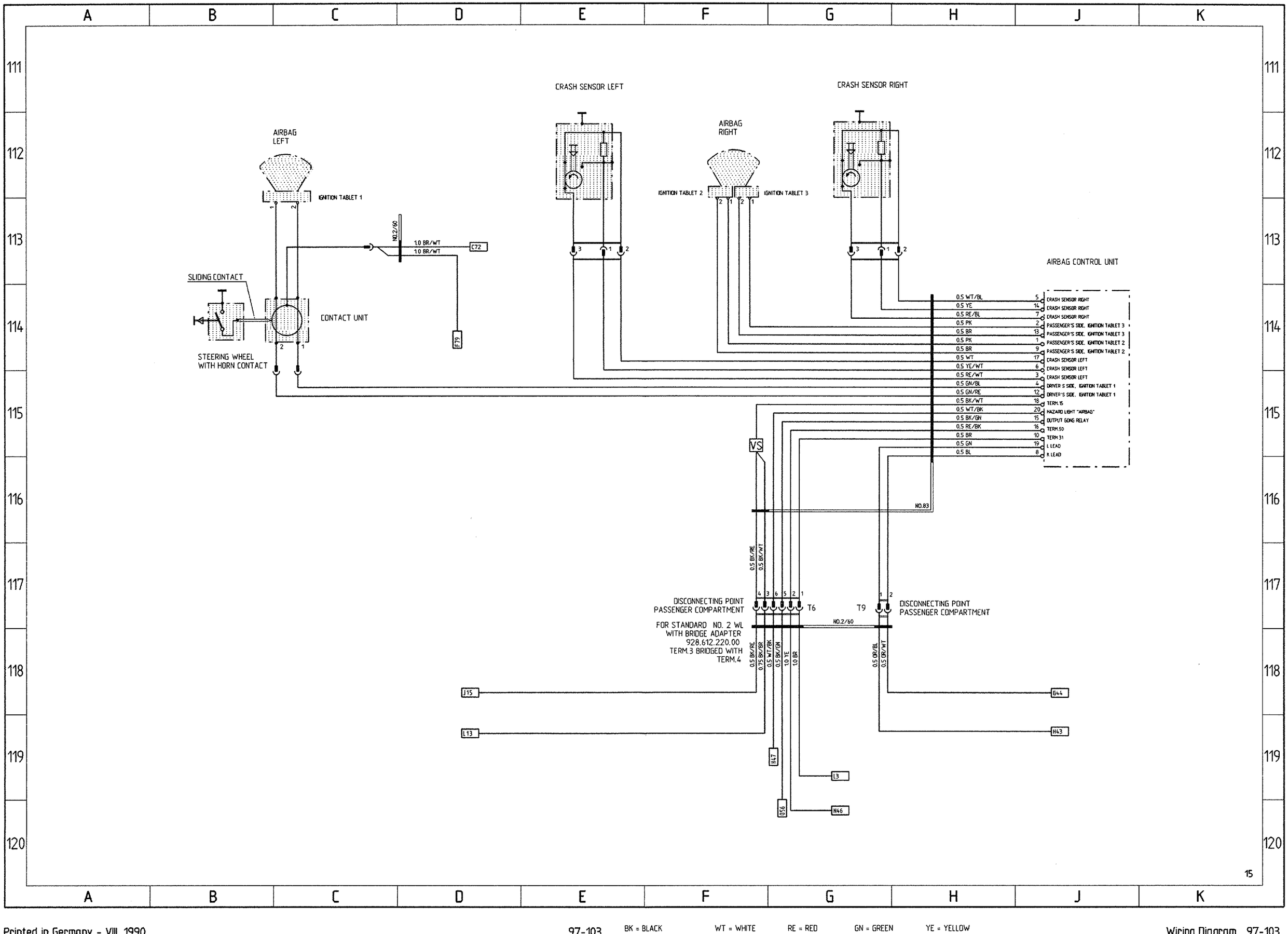
AIRBAG LEFT
IGNITION TABLET 1
SLIDING CONTACT
CONTACT UNIT
STEERING WHEEL WITH HORN CONTACT
NO.2/60
1.0 BR/WT
1.0 BR/WT
C72
F79
CRASH SENSOR LEFT
AIRBAG RIGHT
IGNITION TABLET 2
IGNITION TABLET 3
CRASH SENSOR RIGHT
AIRBAG CONTROL UNIT
0.5 WT/BL 5 CRASH SENSOR RIGHT
0.5 YE 14 CRASH SENSOR RIGHT
0.5 RE/BL 7 CRASH SENSOR RIGHT
0.5 PK 2 PASSENGER'S SIDE, IGNITION TABLET 3
0.5 BR 13 PASSENGER'S SIDE, IGNITION TABLET 3
0.5 PK 1 PASSENGER'S SIDE, IGNITION TABLET 2
0.5 BR 9 PASSENGER'S SIDE, IGNITION TABLET 2
0.5 WT 17 CRASH SENSOR LEFT
0.5 YE/WT 6 CRASH SENSOR LEFT
0.5 RE/WT 3 CRASH SENSOR LEFT
0.5 GN/BL 4 DRIVER'S SIDE, IGNITION TABLET 1
0.5 GN/RE 12 DRIVER'S SIDE, IGNITION TABLET 1
0.5 BK/WT 18 TERM.15
0.5 WT/BK 20 HAZARD LIGHT "AIRBAG"
0.5 BK/GN 15 OUTPUT GONG RELAY
0.5 RE/BK 16 TERM.50
0.5 BR 10 TERM.31
0.5 GN 19 L LEAD
0.5 BL 8 R LEAD
VS
NO.83
0.5 BK/RE
0.5 BK/WT
DISCONNECTING POINT PASSENGER COMPARTMENT
T6
T9
DISCONNECTING POINT PASSENGER COMPARTMENT
FOR STANDARD NO. 2 WL WITH BRIDGE ADAPTER 928.612.220.00 TERM.3 BRIDGED WITH TERM.4
NO.2/60
0.5 BK/RE
0.75 BK/BR
0.5 WT/BK
0.5 BK/GN
1.0 YE
1.0 BR
0.5 OR/BL
0.5 OR/WT
J15
L13
G44
H43
H47
L3
056
N46

15

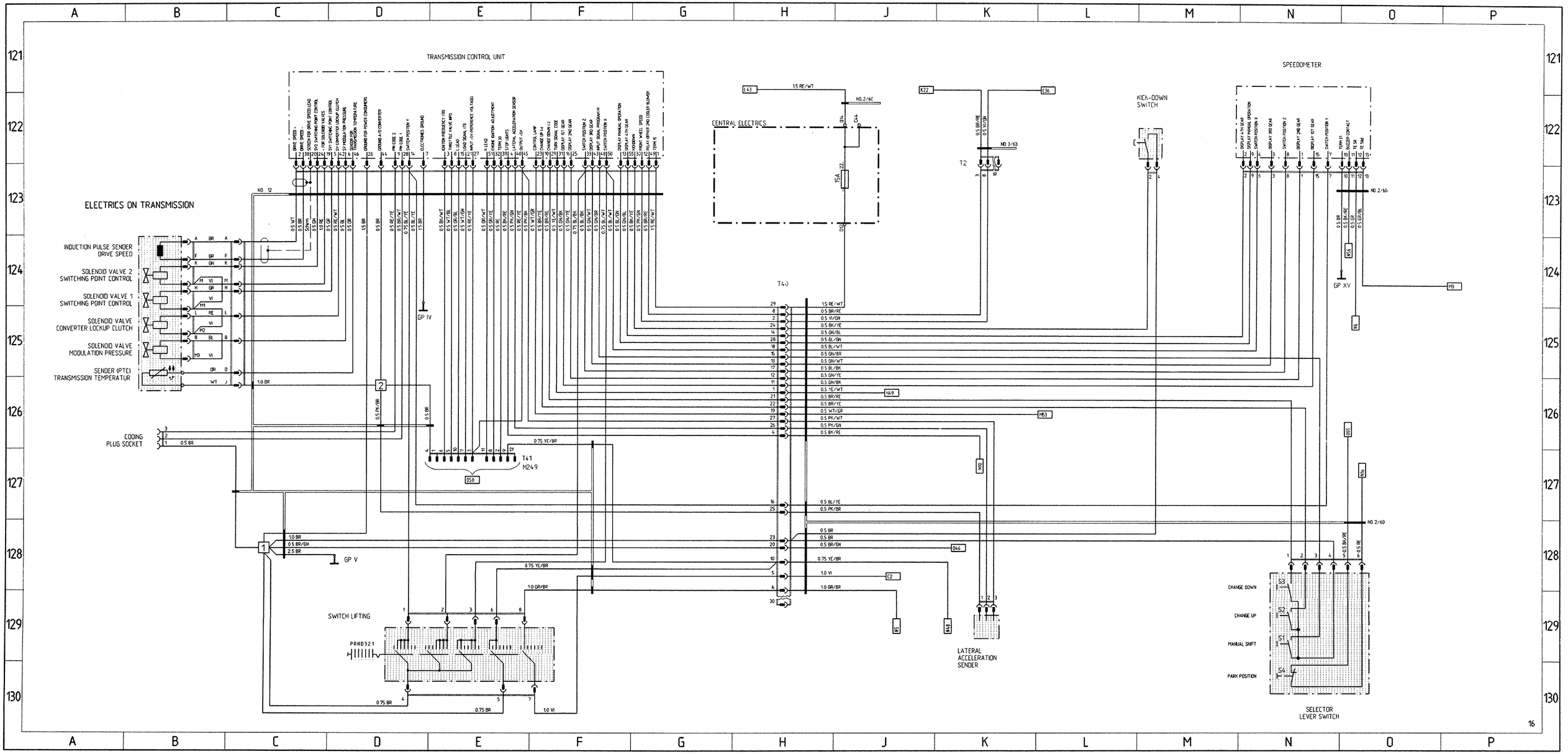
TRANSMISSION CONTROL UNIT
ELECTRICS ON TRANSMISSION
CENTRAL ELECTRICS
SPEEDOMETER
KICK-DOWN SWITCH
INDUCTION PULSE SENDER DRIVE SPEED
SOLENOID VALVE 2 SWITCHING POINT CONTROL
SOLENOID VALVE 1 SWITCHING POINT CONTROL
SOLENOID VALVE CONVERTER LOCKUP CLUTCH
SOLENOID VALVE MODULATION PRESSURE
SENDER (PTC) TRANSMISSION TEMPERATUR
CODING PLUG SOCKET
SWITCH LIFTING
PRND321
LATERAL ACCELERATION SENDER
SELECTOR LEVER SWITCH
CHANGE DOWN
CHANGE UP
MANUAL SHIFT
PARK POSITION
T40
T41
M249
T2
GP IV
GP V
GP XV
16

Changes to the circuit diagram for the 911 Carrera 2/4, models 89, 90

Sheet 5, D 50

Within the update, ground points for the DME control unit were marked incorrectly.
2.5 mm^2 lead, brown, to ground point XXI.
1.5 mm^2 lead, brown, to ground point XXII.

Changes to the circuit diagram for the 911 Carrera 2/4 models 90, 91

Sheet 8, O/P 71/72 and L/M 79

The zero travel, convertible top operation, top left-hand, top right-hand microswitches are drawn in the "open" position in the wiring diagrams. They are designed as normally closed switches, however; refer to model 92.

Please alter the circuit diagrams accordingly.

Printed in Germany – XII, 1991

Wiring Diagram
Type 911 Carrera 2 and 4 Model 92

	Coordinates	
Sheet 1	1 - 10	Lights
Sheet 2	11 - 20	Alarm System, Central Locks, Mirror, Power Window Regulator, Inside Lights
Sheet 3	21 - 30	Heater, AC, Coolant Fan, Rear Window Defogger
Sheet 4	31 - 40	ABS, Porsche Dynamic AWD Control (Carrera 4)
Sheet 4a	31 - 40	ABS (Carrera 2)
Sheet 4b		ABS Turbo look (Carrera 2)
Sheet 5	41 - 50	Motor, Ignition, Cruise Control
Sheet 6	51 - 60	Instruments, Sender, Central Informer, On-board computer
Sheet 7	61 - 70	Seats
Sheet 8	71 - 80	Rear Spoiler, Two-Tone Horns, Wipe- and Wash Cleaners, Sun Roof, Convertible Top
Sheet 9	81 - 90	Radio, Telephone
Sheet 10	91 - 100	Fog Light, Rear Fog Light
Sheet 11		Central Electric
Sheet 12		Construction Components
Sheet 13		Plug Connections, Ground Points, M-Numbers, Abbreviations
Sheet 14	101 - 110	Trailer Coupling
Sheet 15	111 - 120	Airbag
Sheet 16	121 - 130	Tiptronic (Carrera 2)
Sheet 17	131 - 140	911 Carrera RS

Wiring Diagram
Type 911 Carrera 2 and 4 Model 92

The wiring diagram consists of *17 individual wiring diagrams*, 1 sheet *construction components* and 1 sheet *plug connections and ground points*. These are divided into coordinate fields.

Each individual wiring diagram contains a part of the central-electrics box in a dashdotted frame.

This part of the central-electrics box shows all the lines and relays necessary for the individual wiring diagram.

The earth/ground points are identified by "MP" and their location is shown in a vehicle diagram.

The 10-pin connectors on the central-electrics box are clipped together out of 3 parts, the 20-pin connectors are clipped together out of 5 parts.

Part 1, with the moduled-on fastening lug, is the "starting element".

Parts 2,3 and 4 are "module elements".

The 10-pin connectors only contents one "module element".

Start- and module elements are identified by the numbers 1.....5.

Part 5 ist a "coding element".

The designations of the plug connections in the wiring diagram refer to the "starting element" from, for example, B 11.....15, and to the first module element from B 21.....25.

Printed in Germany – XII, 1991

LIGHTS

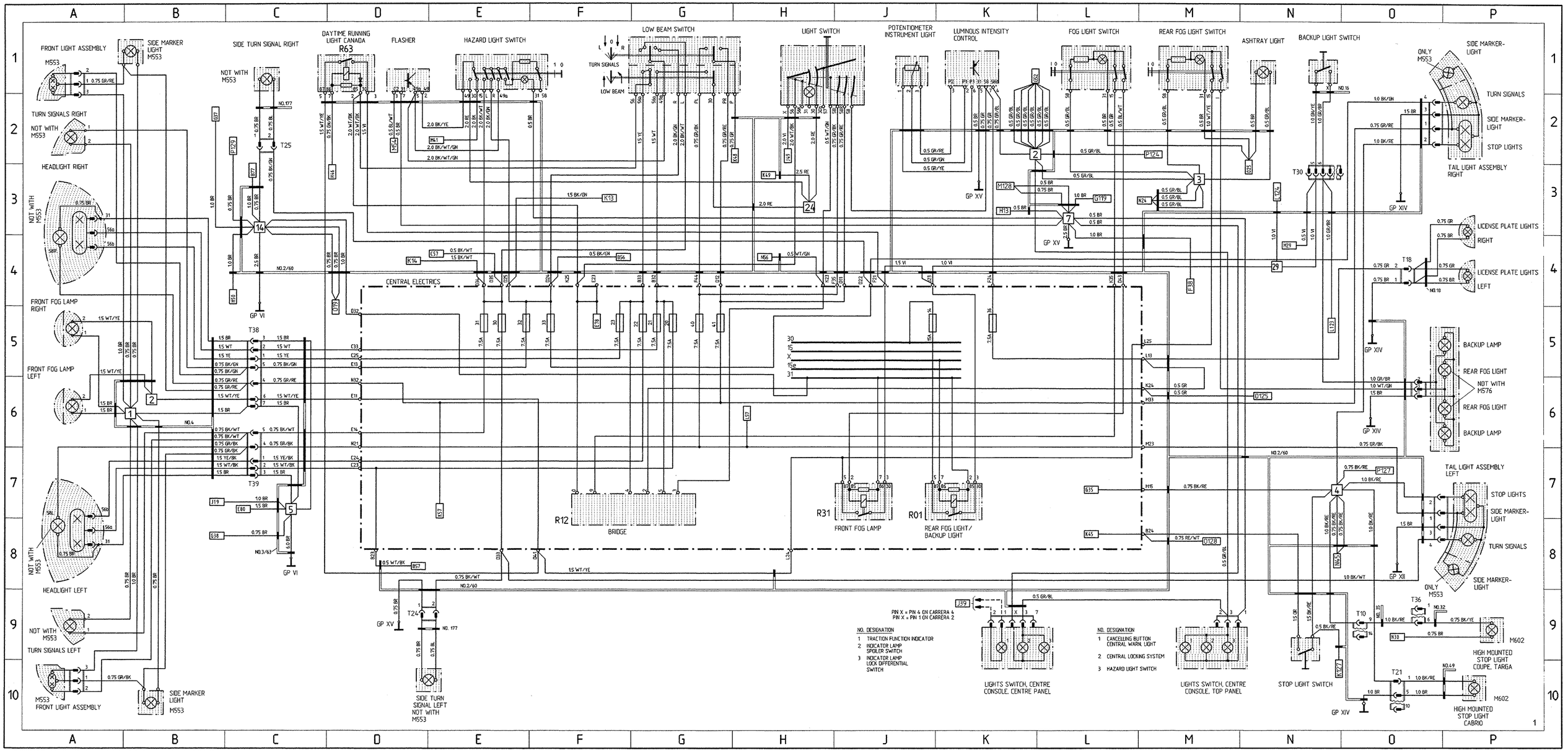

Printed in Germany - XII, 1991

97-111

BK = BLACK WT = WHITE RE = RED GN = GREEN YE = YELLOW GR = GREY BR = BROWN BL = BLUE VI = VIOLET PK = PINK OR = ORANGE

WIRING DIAGRAMM 97-111

911 Carrera 2/4 MODEL 92 SHEET 2

ALARM SYSTEM, CENTRAL LOCKING SYSTEM , MIRROR, POWER WINDOW REGULATOR , INSIDE LIGHTS

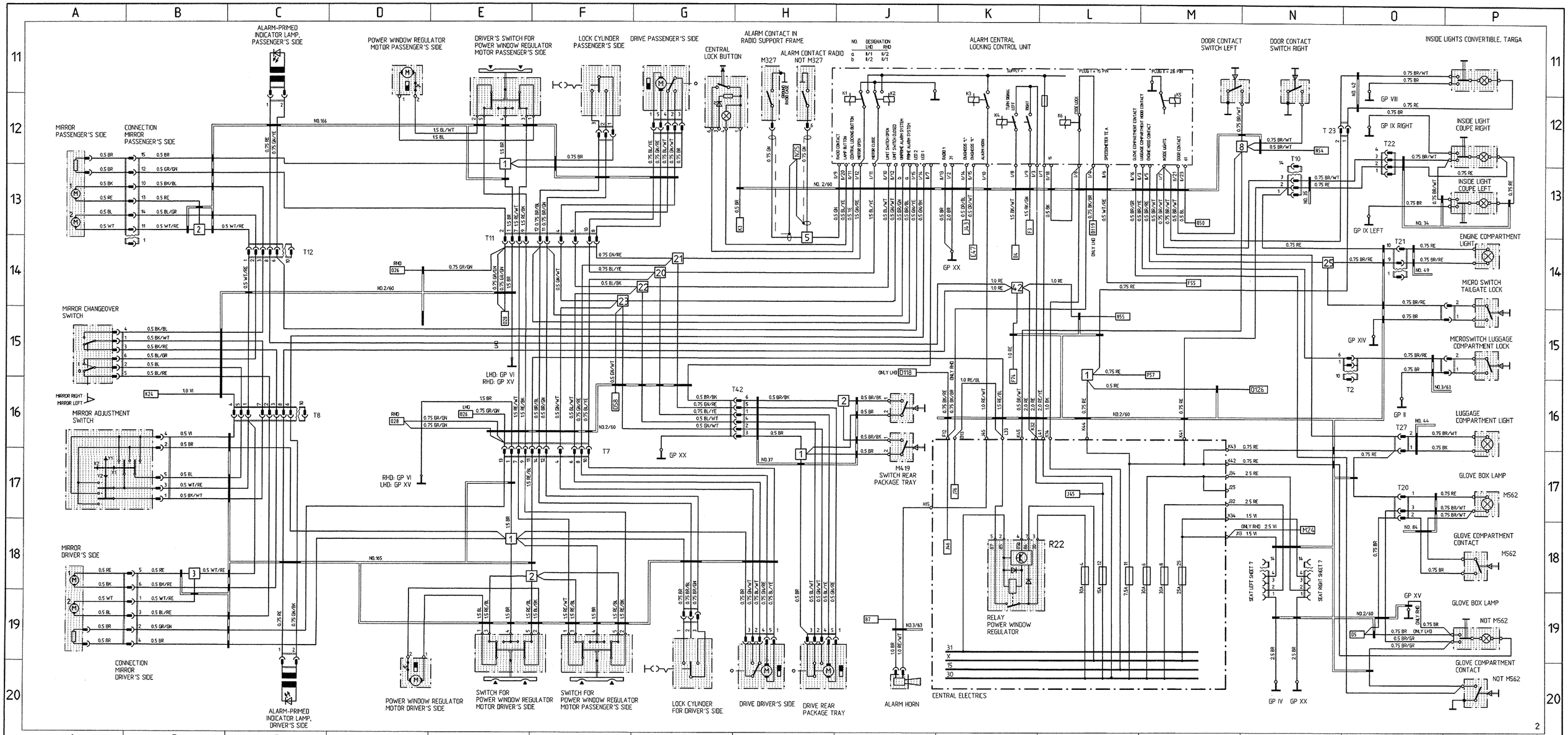

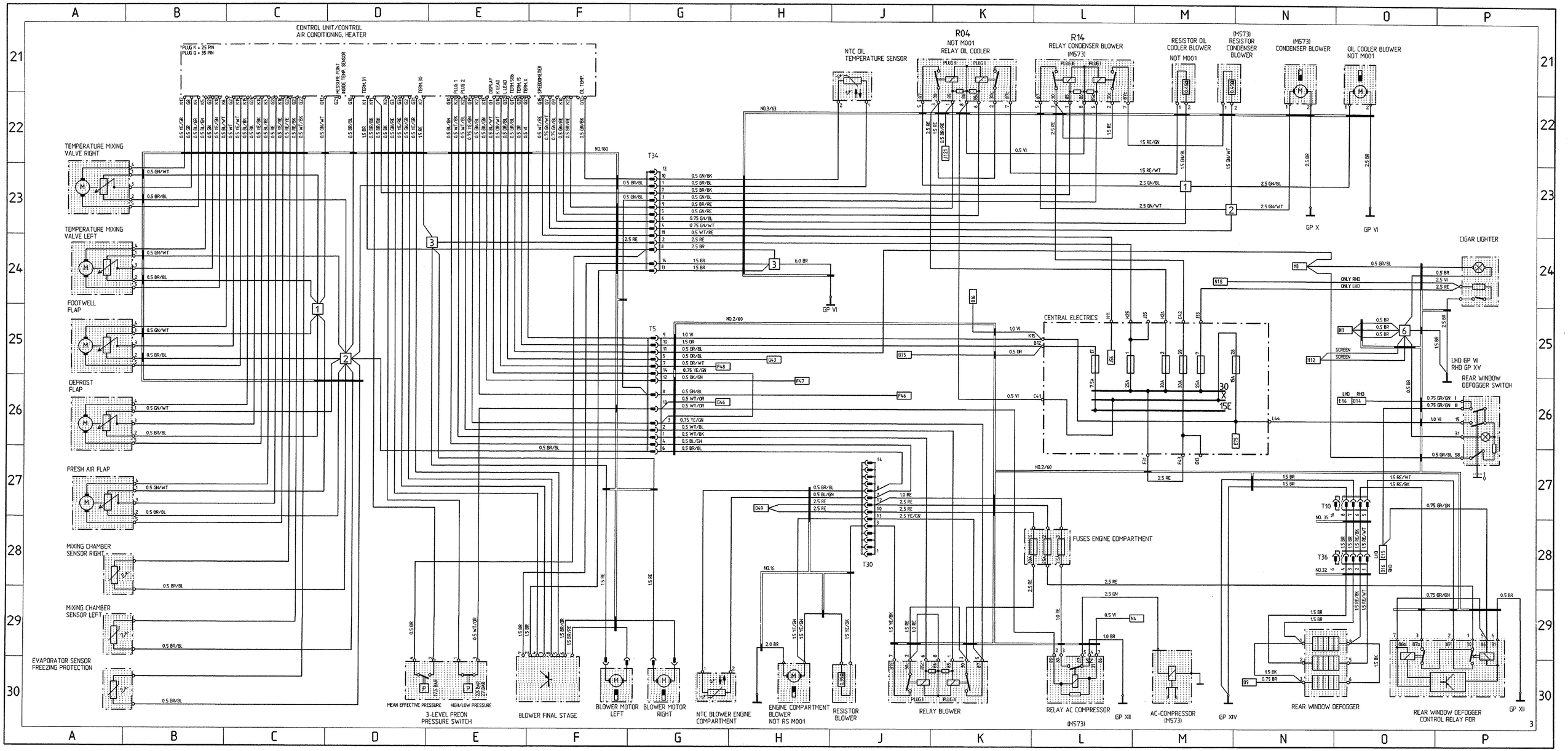
CONTROL UNIT/CONTROL AIR CONDITIONING, HEATER
PLUG K = 25 PIN
PLUG G = 35 PIN
NTC OIL TEMPERATURE SENSOR
R04
NOT M001
RELAY OIL COOLER
R14
RELAY CONDENSER BLOWER (M573)
RESISTOR OIL COOLER BLOWER NOT M001
(M573) RESISTOR CONDENSER BLOWER
(M573) CONDENSER BLOWER
OIL COOLER BLOWER NOT M001
GP X
GP VI
TEMPERATURE MIXING VALVE RIGHT
TEMPERATURE MIXING VALVE LEFT
FOOTWELL FLAP
DEFROST FLAP
FRESH AIR FLAP
MIXING CHAMBER SENSOR RIGHT
MIXING CHAMBER SENSOR LEFT
EVAPORATOR SENSOR FREEZING PROTECTION
T34
T5
T30
T10
T36
CENTRAL ELECTRICS
FUSES ENGINE COMPARTMENT
CIGAR LIGHTER
LHD GP VI
RHD GP XV
REAR WINDOW DEFOGGER SWITCH
3-LEVEL FREON PRESSURE SWITCH
BLOWER FINAL STAGE
BLOWER MOTOR LEFT
BLOWER MOTOR RIGHT
NTC BLOWER ENGINE COMPARTMENT
ENGINE COMPARTMENT BLOWER NOT RS M001
RESISTOR BLOWER
RELAY BLOWER
RELAY AC COMPRESSOR (M573)
GP XII
AC-COMPRESSOR (M573)
GP XIV
REAR WINDOW DEFOGGER
REAR WINDOW DEFOGGER CONTROL RELAY FOR
GP XII

911 Carrera 4 MODEL 92 SHEET 4

ABS, PORSCHE DYNAMIC AWD CONTROL

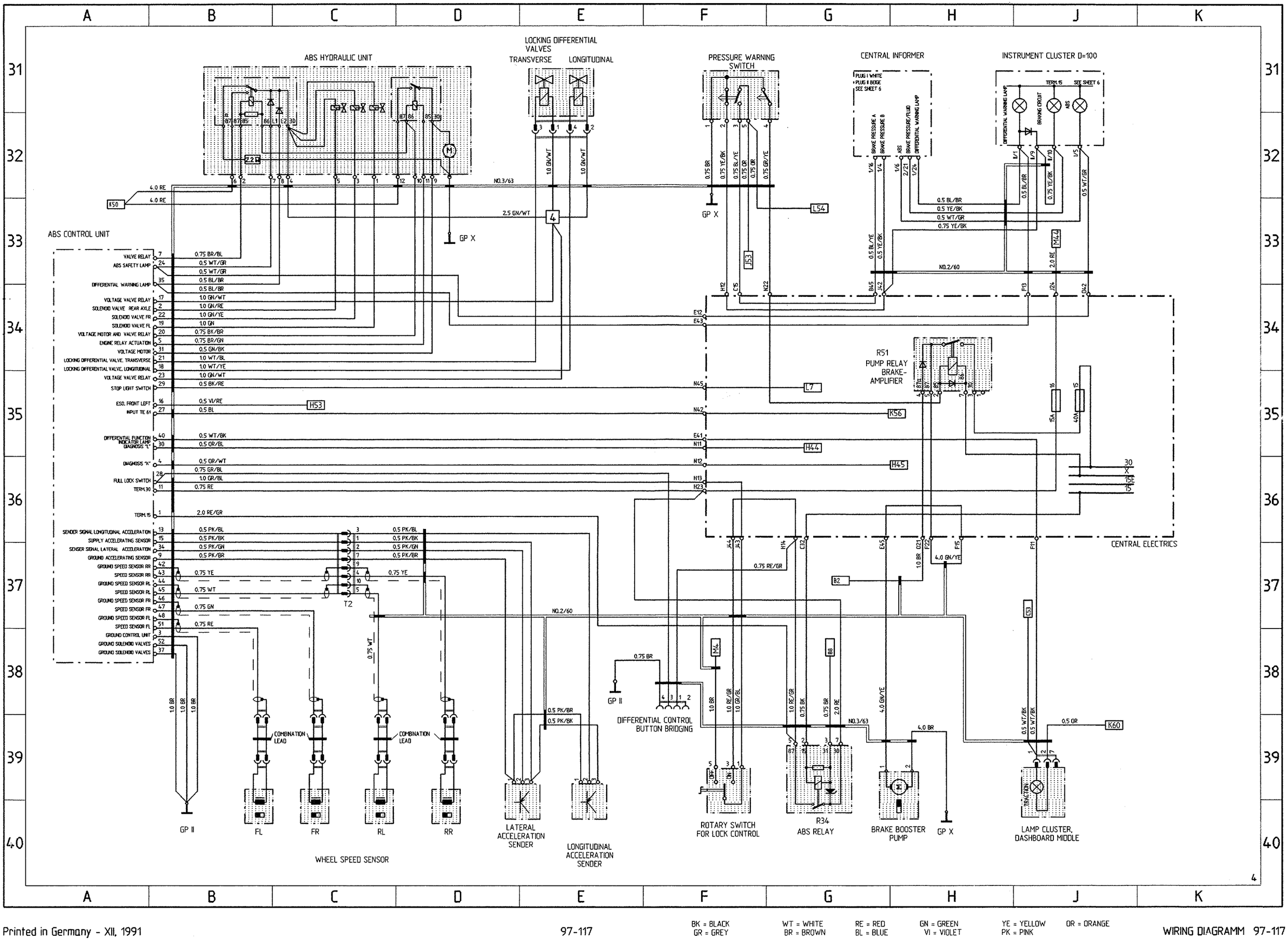

BK = BLACK GR = GREY WT = WHITE BR = BROWN RE = RED BL = BLUE GN = GREEN VI = VIOLET YE = YELLOW PK = PINK OR = ORANGE

ABS

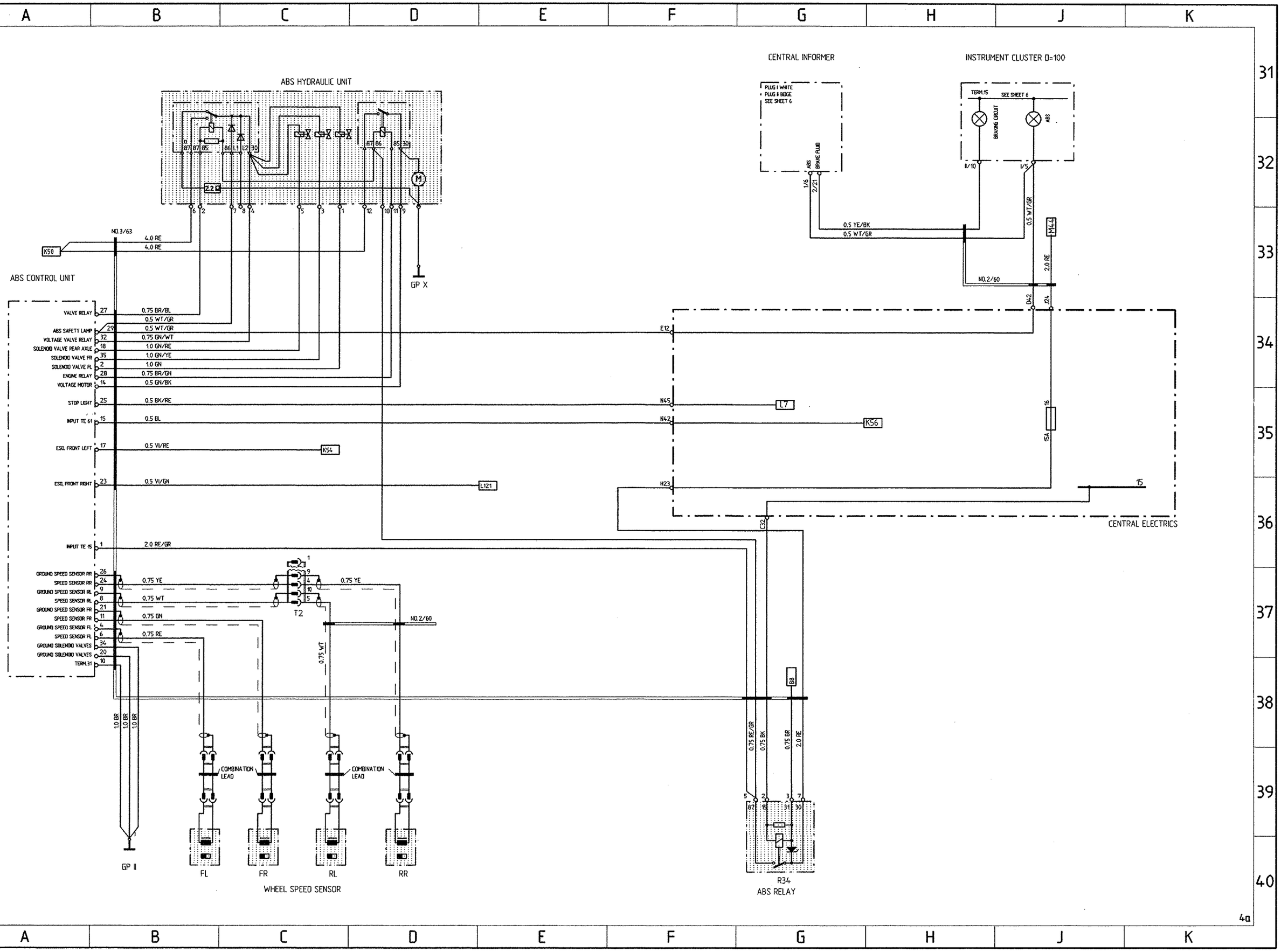
ABS HYDRAULIC UNIT
CENTRAL INFORMER
PLUG I WHITE
PLUG II BEIGE
SEE SHEET 6
ABS
BRAKE FLUID
INSTRUMENT CLUSTER D=100
TERM.15
SEE SHEET 6
BRAKING CIRCUIT
ABS
II/10
I/5
0.5 YE/BK
0.5 WT/GR
0.5 WT/GR
M14.4
2.0 RE
NO.2/60
D42
J24
NO.3/63
4.0 RE
4.0 RE
K50
ABS CONTROL UNIT
VALVE RELAY 27 0.75 BR/BL
0.5 WT/GR
ABS SAFETY LAMP 29 0.5 WT/GR
VOLTAGE VALVE RELAY 32 0.75 GN/WT
SOLENOID VALVE REAR AXLE 18 1.0 GN/RE
SOLENOID VALVE FR 35 1.0 GN/YE
SOLENOID VALVE FL 2 1.0 GN
ENGINE RELAY 28 0.75 BR/GN
VOLTAGE MOTOR 14 0.5 GN/BK
STOP LIGHT 25 0.5 BK/RE
INPUT TE 61 15 0.5 BL
ESD, FRONT LEFT 17 0.5 VI/RE
ESD, FRONT RIGHT 23 0.5 VI/GN
INPUT TE 15 1 2.0 RE/GR
GROUND SPEED SENSOR RR 26
SPEED SENSOR RR 24 0.75 YE
GROUND SPEED SENSOR RL 9
SPEED SENSOR RL 8 0.75 WT
GROUND SPEED SENSOR FR 21
SPEED SENSOR FR 11 0.75 GN
GROUND SOLENOID VALVES 4
SPEED SENSOR FL 6 0.75 RE
GROUND SOLENOID VALVES 34
GROUND SOLENOID VALVES 20
TERM.31 10
E12
N45
L7
N42
K56
H23
16
15A
15
C32
CENTRAL ELECTRICS
K54
L121
T2
0.75 YE
0.75 WT
NO.2/60
0.75 WT
1.0 BR
1.0 BR
1.0 BR
GP II
COMBINATION LEAD
COMBINATION LEAD
FL
FR
RL
RR
WHEEL SPEED SENSOR
B8
0.75 RE/GR
0.75 BK
0.75 BR
2.0 RE
R34
ABS RELAY
4a

ABS HYDRAULIC UNIT

PRESSURE WARNING SWITCH

CENTRAL INFORMER

INSTRUMENT CLUSTER D=100

ABS CONTROL UNIT

VALVE RELAY 27
ABS SAFETY LAMP 29
VOLTAGE VALVE RELAY 32
SOLENOID VALVE REAR AXLE 18
SOLENOID VALVE FR 35
SOLENOID VALVE FL 2
ENGINE RELAY 28
VOLTAGE MOTOR 14
STOP LIGHT 25
INPUT TE 61 15
ESOL FRONT LEFT 17
ESOL FRONT RIGHT 23
INPUT TE 15 1
GROUND SPEED SENSOR RR 26
SPEED SENSOR RR 24
GROUND SPEED SENSOR RL 9
SPEED SENSOR RL 8
GROUND SPEED SENSOR FR 21
SPEED SENSOR FR 11
GROUND SPEED SENSOR FL 4
SPEED SENSOR FL 6
GROUND SOLENOID VALVES 34
GROUND SOLENOID VALVES 20
TERM.31 10

0.75 BR/BL
0.5 WT/GR
0.5 WT/GR
0.75 GN/WT
1.0 GN/RE
1.0 GN/YE
1.0 GN
0.75 BR/GN
0.5 GN/BK
0.5 BK/RE
0.5 BL
0.5 VI/RE
0.5 VI/GN
2.0 RE/GR
0.75 YE
0.75 YE
0.75 WT
0.75 GN
0.75 RE
0.75 WT
1.0 BR
1.0 BR
1.0 BR

NO.3/63
4.0 RE
4.0 RE
K50
GP X
GP II
J54
K121
T2
COMBINATION LEAD
COMBINATION LEAD
FL
FR
RL
RR
WHEEL SPEED SENSOR

NO.3/63
0.75 BR
0.75 YE/BK
0.75 BL/YE
0.75 OR
0.75 GR/YE
GP X
J54
0.75 OR
J53
E12
N45
N42
LZ..
K56

PLUG I WHITE
PLUG II BEIGE
SEE SH. 6
BRAKE PRESSURE A
BRAKE PRESSURE B
ABS BRAKE PRESSURE BRAKE FLUID
0.5 BL/YE
0.5 YE/BK
0.75 YE/BK
0.5 YE/BK
0.5 WT/GR
NO.2/60
0.5 WT/GR
2.0 RE
M44

TERM.15 SEE SH. 6
BRAKING CIRCUIT
ABS
II/10
I/5

R51
PUMP RELAY
BRAKE-
AMPLIFIER
15A
40A
30
X
15
CENTRAL ELECTRICS

C32
H23
F22
F15
E45
D21
NOT RS
ONLY RS
0.75 BK
4.0 GN/YE
1.0 BR
B2
NO.2/60
NO.3/63
T2
0.75 BK
0.75 BK/WT
0.75 BK/WT
ONLY RS
ONLY RS
B8
0.75 RE/GR
0.75 BK
0.75 BK
0.75 BR
2.0 RE
4.0 BR
4.0 GN/YE
R34
ABS RELAY
BRAKE BOOSTER PUMP
GP X

4b

BK = BLACK
GR = GREY
WT = WHITE
BR = BROWN
RE = RED
BL = BLUE
GN = GREEN
VI = VIOLET
YE = YELLOW
PK = PINK
OR = ORANGE

911 Carrera 2/4 MODEL 92 SHEET 5

MOTOR, FUEL, IGNITION, CRUISE CONTROL

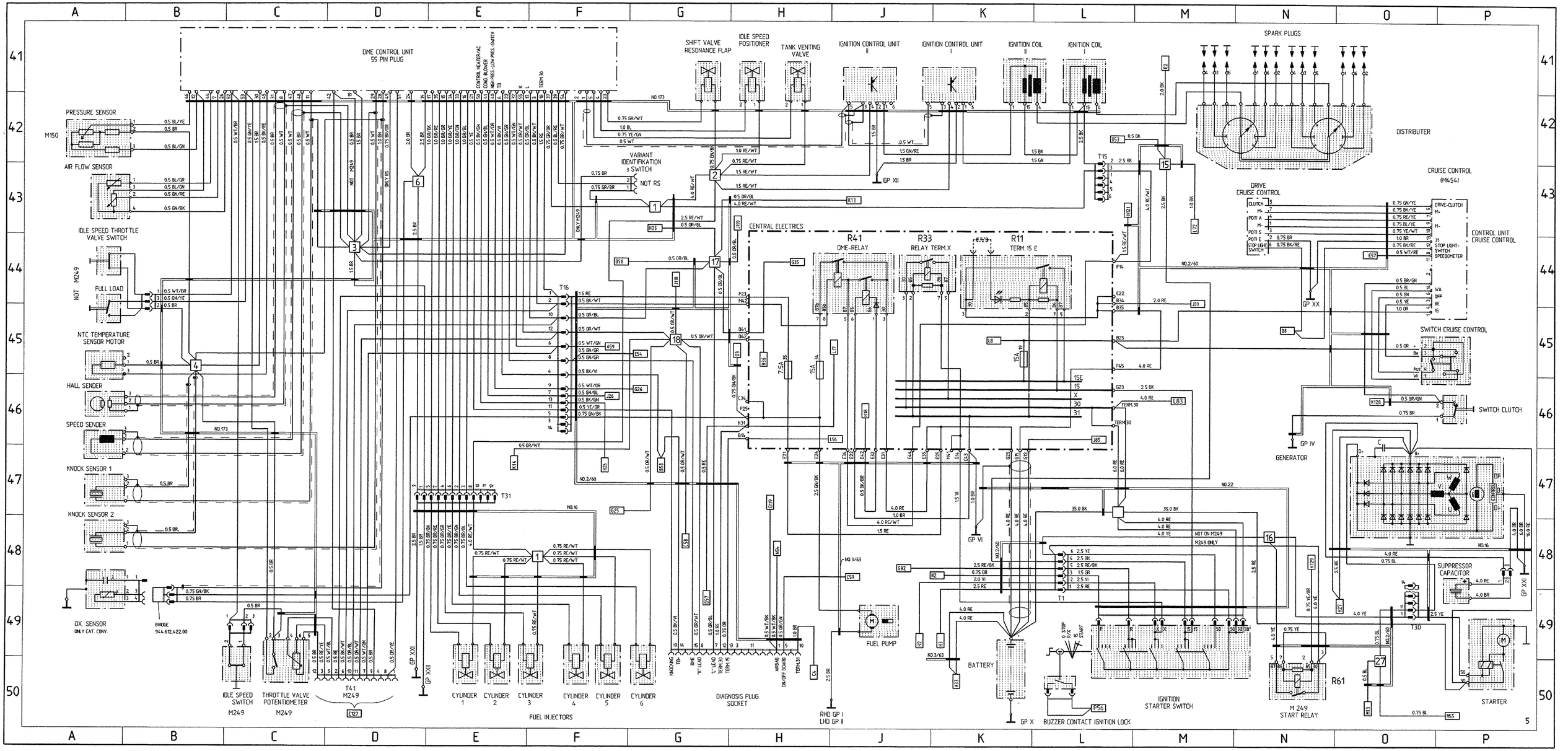

911 Carrera 2/4 MODEL 92 SHEET 6

INSTRUMENTS AND SENDER

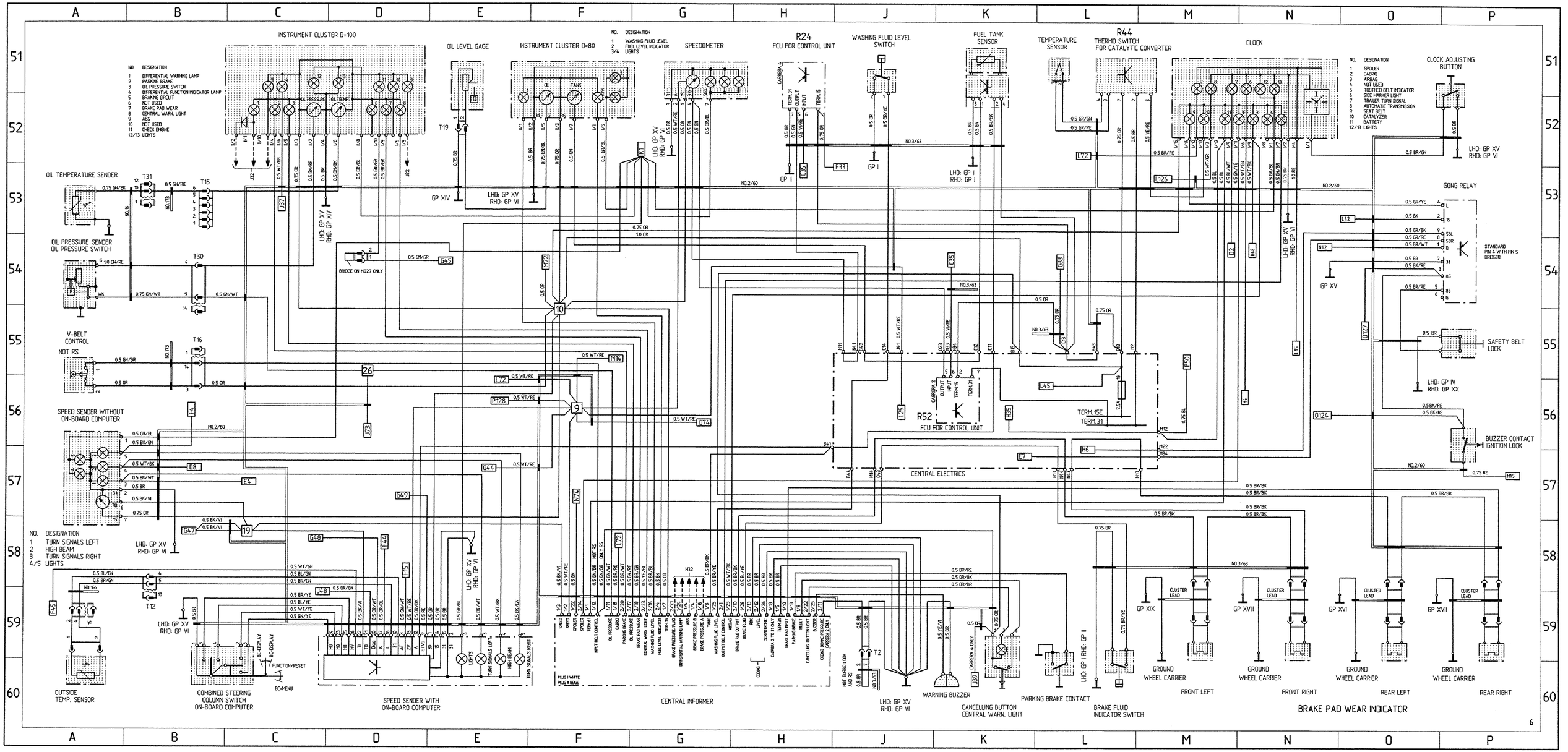

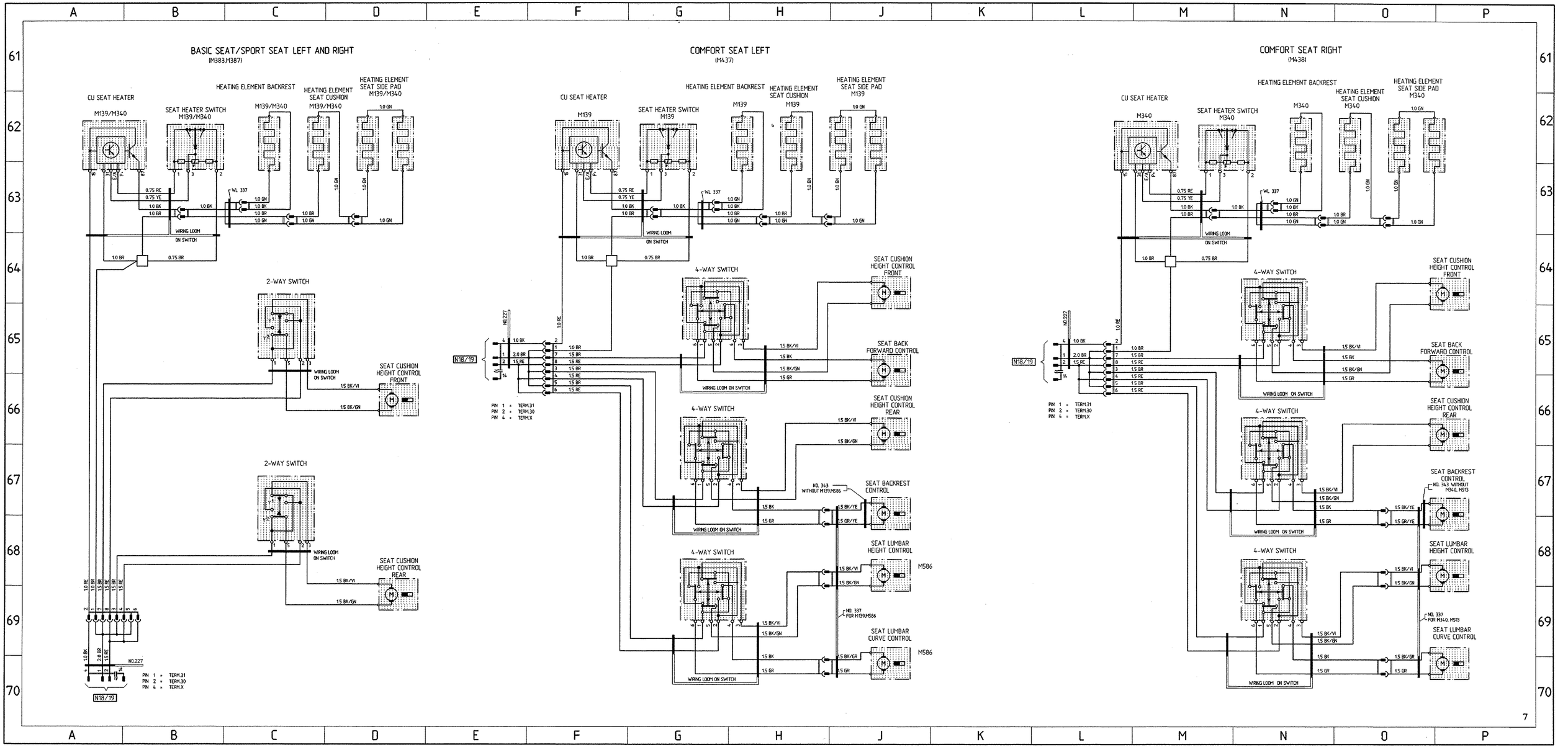
BASIC SEAT/SPORT SEAT LEFT AND RIGHT
(M383,M387)
COMFORT SEAT LEFT
(M437)
COMFORT SEAT RIGHT
(M438)
CU SEAT HEATER
SEAT HEATER SWITCH
HEATING ELEMENT BACKREST
HEATING ELEMENT SEAT CUSHION
HEATING ELEMENT SEAT SIDE PAD
WIRING LOOM ON SWITCH
2-WAY SWITCH
4-WAY SWITCH
SEAT CUSHION HEIGHT CONTROL FRONT
SEAT CUSHION HEIGHT CONTROL REAR
SEAT BACK FORWARD CONTROL
SEAT BACKREST CONTROL
SEAT LUMBAR HEIGHT CONTROL
SEAT LUMBAR CURVE CONTROL
N18/19
PIN 1 = TERM.31
PIN 2 = TERM.30
PIN 4 = TERM.X

911 Carrera 2/4 MODEL 92 SHEET 8

REAR SPOILER, TWO-TONE HORNS, WIPE- AND WASH CLEANERS, SUN ROOF, CONVERTIBLE TOP

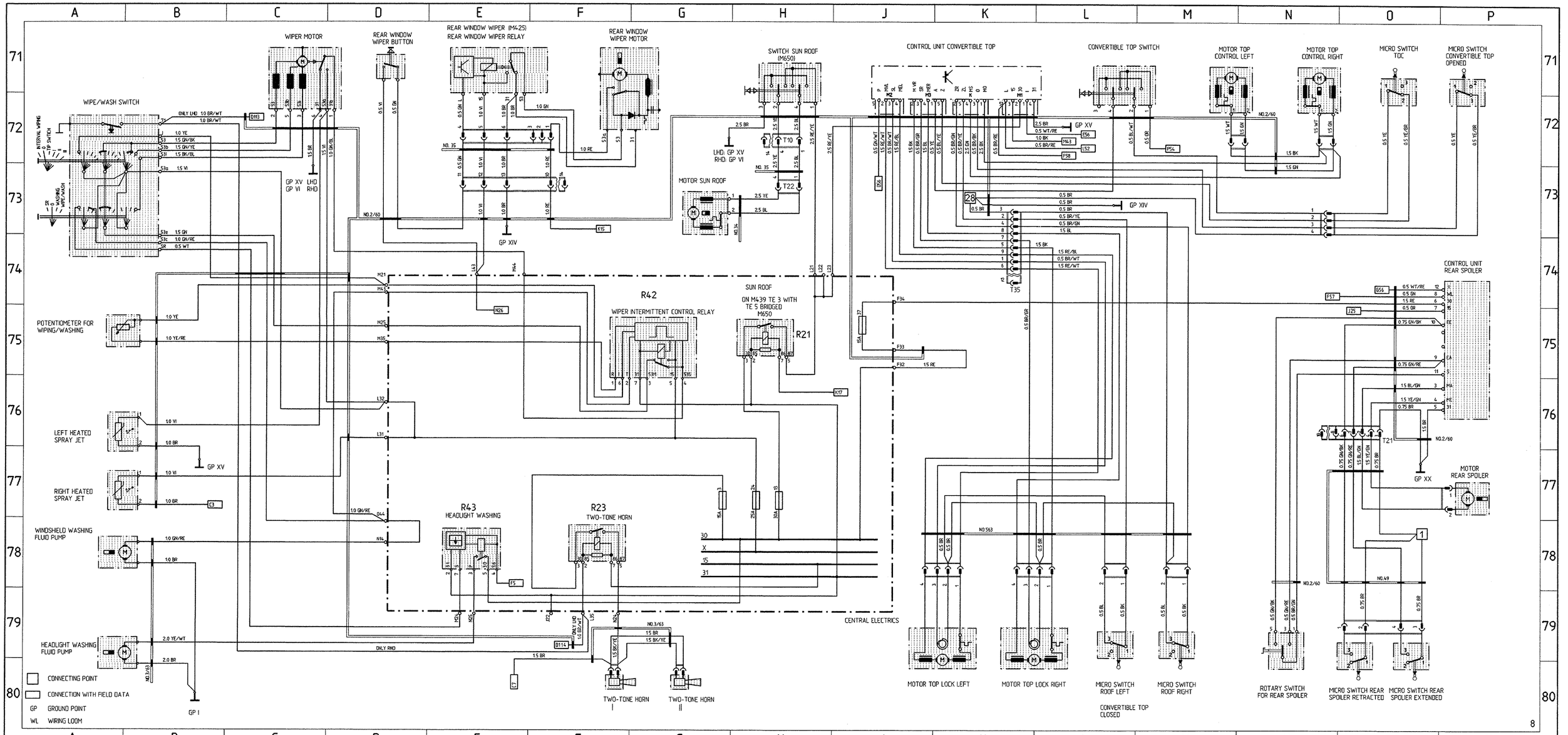

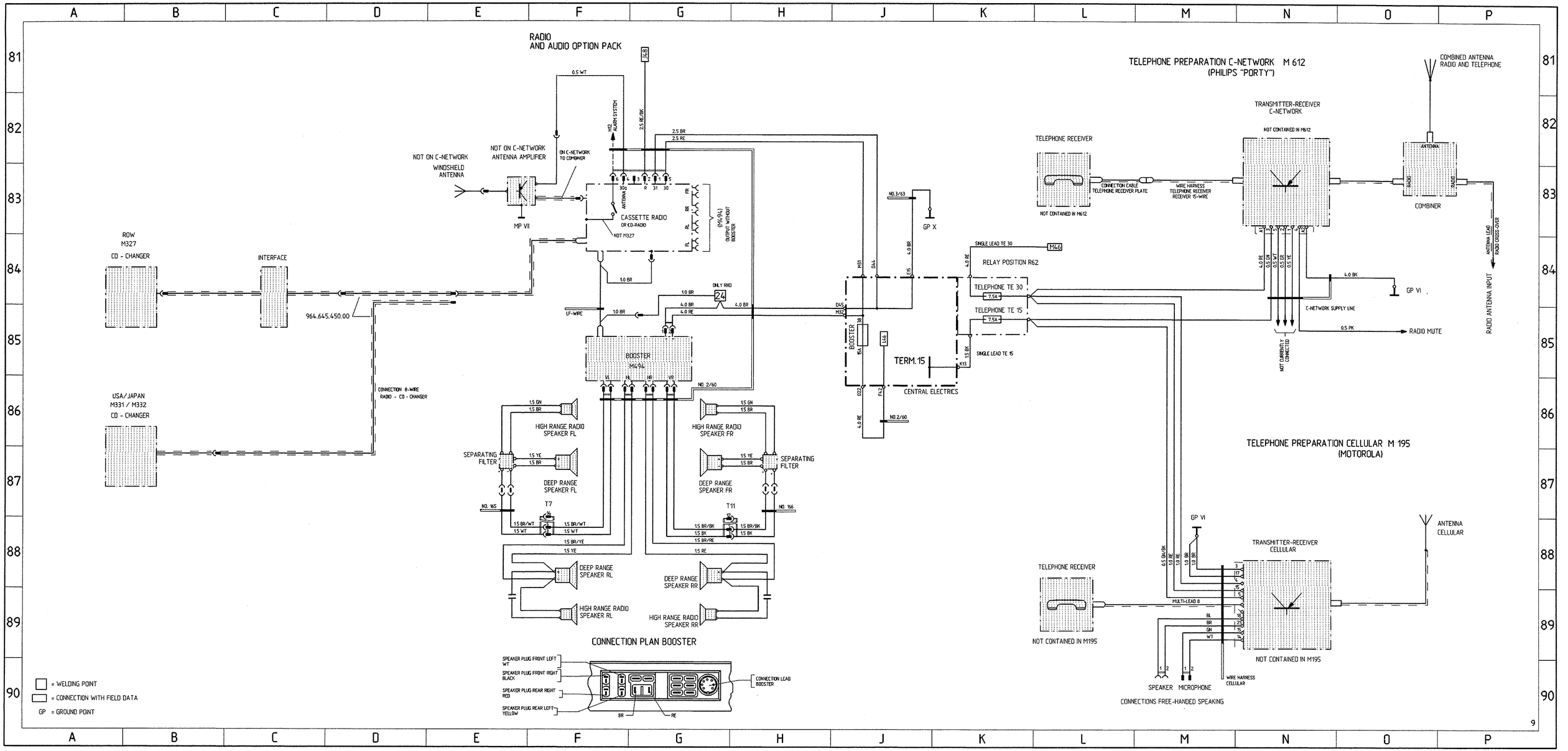
RADIO
AND AUDIO OPTION PACK
TELEPHONE PREPARATION C-NETWORK M 612
(PHILIPS "PORTY")
TELEPHONE PREPARATION CELLULAR M 195
(MOTOROLA)
ROW
M327
CD - CHANGER
INTERFACE
964.645.450.00
USA/JAPAN
M331 / M332
CD - CHANGER
CONNECTION 8-WIRE
RADIO - CD - CHANGER
NOT ON C-NETWORK
WINDSHIELD
ANTENNA
NOT ON C-NETWORK
ANTENNA AMPLIFIER
ON C-NETWORK
TO COMBINER
MP VII
CASSETTE RADIO
OR CD-RADIO
NOT M327
(M494)
OUTPUT WITHOUT
BOOSTER
BOOSTER
M494
ONLY RHD
LF-WIRE
HIGH RANGE RADIO
SPEAKER FL
HIGH RANGE RADIO
SPEAKER FR
SEPARATING
FILTER
DEEP RANGE
SPEAKER FL
DEEP RANGE
SPEAKER FR
DEEP RANGE
SPEAKER RL
DEEP RANGE
SPEAKER RR
HIGH RANGE RADIO
SPEAKER RL
HIGH RANGE RADIO
SPEAKER RR
T7
T11
NO. 165
NO. 166
NO. 2/60
NO. 3/63
GP X
TERM. 15
CENTRAL ELECTRICS
RELAY POSITION R62
TELEPHONE TE 30
TELEPHONE TE 15
7.5A
SINGLE LEAD TE 30
SINGLE LEAD TE 15
M46
TELEPHONE RECEIVER
NOT CONTAINED IN M612
CONNECTION CABLE
TELEPHONE RECEIVER PLATE
WIRE HARNESS
TELEPHONE RECEIVER
RECEIVER 15-WIRE
TRANSMITTER-RECEIVER
C-NETWORK
NOT CONTAINED IN M612
COMBINED ANTENNA
RADIO AND TELEPHONE
ANTENNA
COMBINER
GP VI
C-NETWORK SUPPLY LINE
RADIO MUTE
ANTENNA LEAD/
RADIO CROSS-OVER
RADIO ANTENNA INPUT
NOT CURRENTLY
CONNECTED
TELEPHONE RECEIVER
NOT CONTAINED IN M195
TRANSMITTER-RECEIVER
CELLULAR
ANTENNA
CELLULAR
MULTI-LEAD 8
NOT CONTAINED IN M195
SPEAKER
MICROPHONE
WIRE HARNESS
CELLULAR
CONNECTIONS FREE-HANDED SPEAKING
CONNECTION PLAN BOOSTER
SPEAKER PLUG FRONT LEFT
WT
SPEAKER PLUG FRONT RIGHT
BLACK
SPEAKER PLUG REAR RIGHT
RED
SPEAKER PLUG REAR LEFT
YELLOW
CONNECTION LEAD
BOOSTER
= WELDING POINT
= CONNECTION WITH FIELD DATA
GP = GROUND POINT

FOG LIGHT, REAR FOG LIGHT

FOG LIGHT- AND REAR FOG LIGHT-WIRINGS

ROW
FOG LIGHT +
REAR FOG LIGHT FROM 58

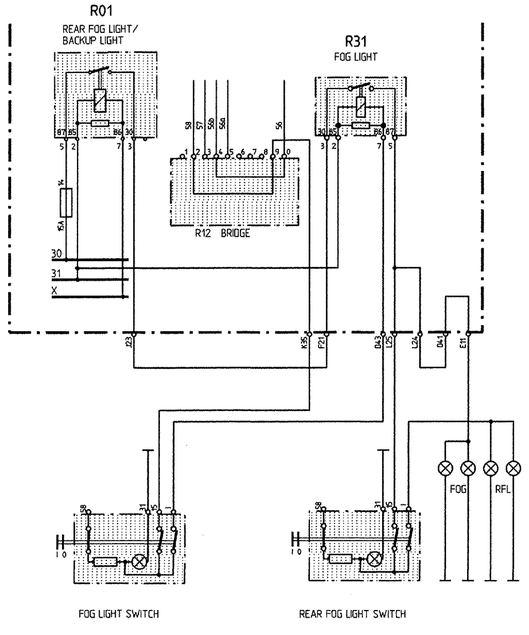

M487-NORWAY
FOG LIGHT + REAR FOG LIGHT
ONLY WITH 57

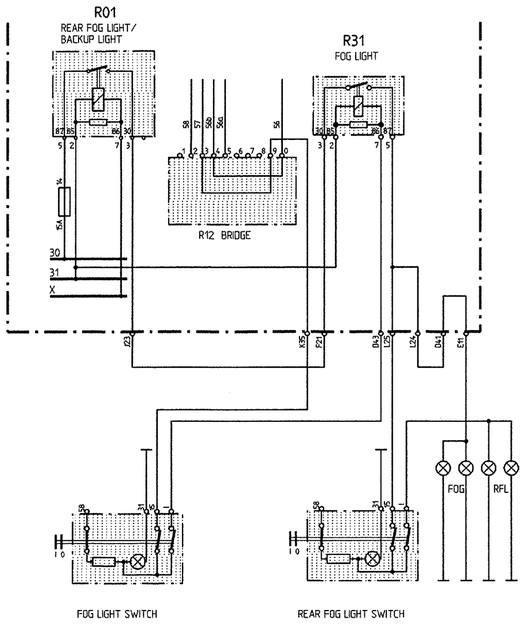

M553-USA
FOG LIGHT WITH 56b + 57

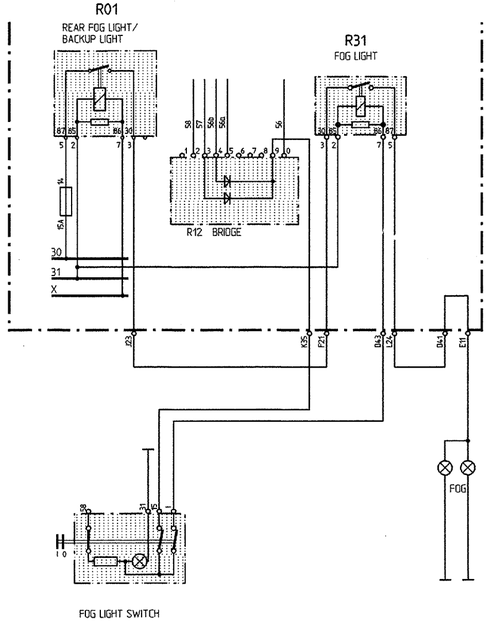

M193 JAPAN
FOG LIGHT +
REAR FOG LIGHT FROM 58

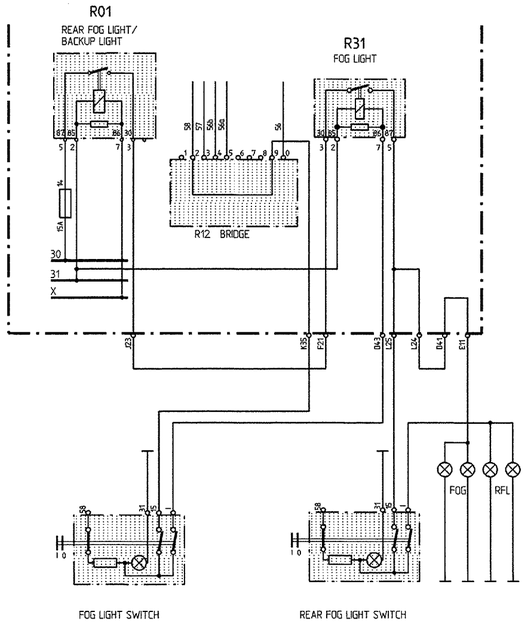

10

911 Carrera 2/4 MODEL 92 SHEET 11

CENTRAL ELECTRICS

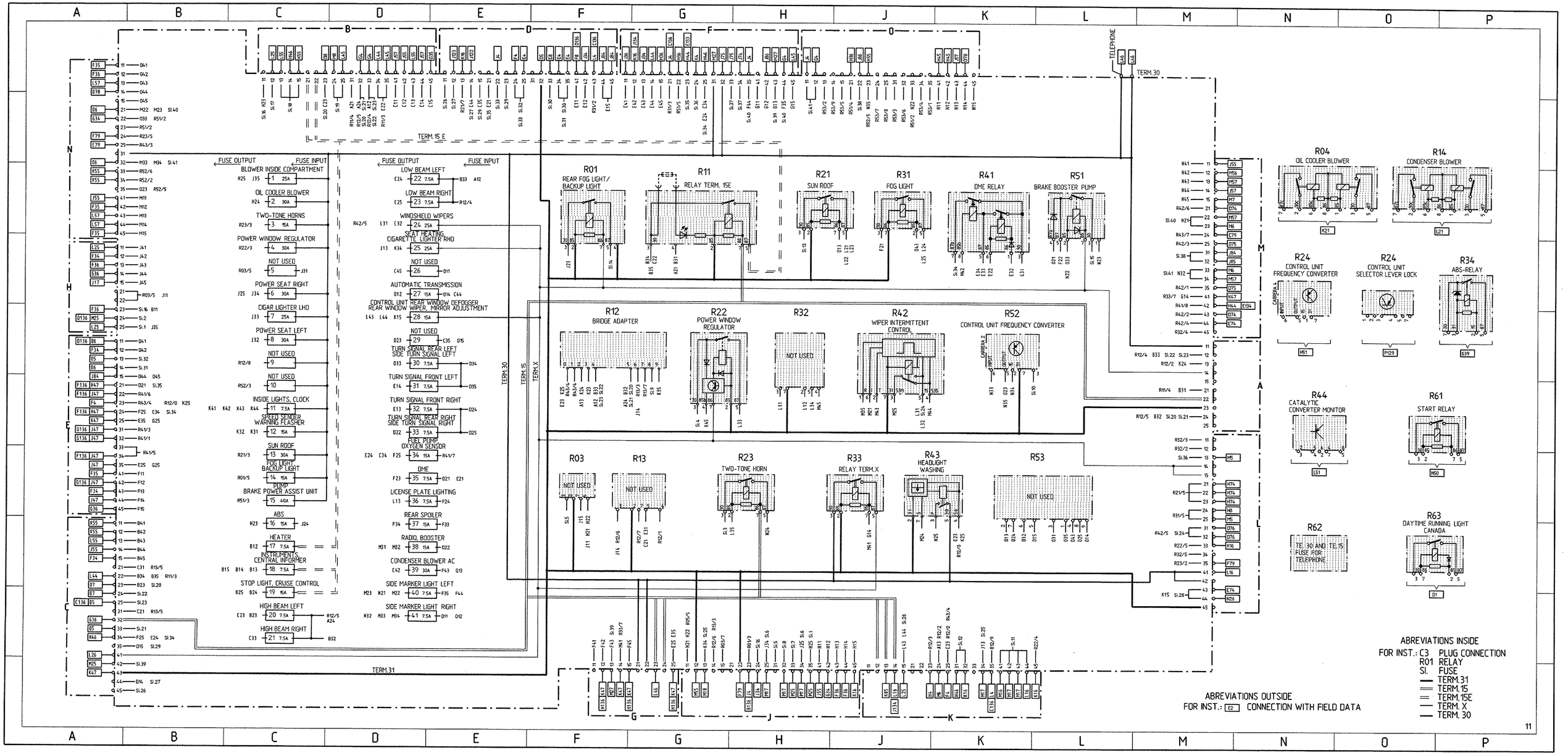

CONSTRUCTION COMPONENTS

DESIGNATION, FUNCTION	POSITION IN VEHICLE LHD	RHD	NOTE	FIELD IN WIRING DIAGRAMM
ABS RELAY	6cM	6cM	CENTRAL ELECTRICS	G39/40
ALARM HORN	3cL	3cL	IN WHEEL HOUSING FRONT RIGHT	J20
ANTENNA AMPLIFIER	7bL	7bQ	IN LUGGAGE COMPARTMENT	B84,E84
OUTSIDE TEMP. SENSOR	8bR	8bK	IN OUTSIDE MIRROW	B60
BATTERY MAIN SWITCH RS	2dN	2dN	IN LUGGAGE COMPARTMENT	H138/139
FLASHER	7dN	7dN	IN CENTRE CONSOLE	D1
BOOSTER	9eM	9eM	UNDER THE SEAT RIGHT	F/G85
STOP LIGHT SWITCH	6dP	6dM	AT THE BRAKE PEDAL BELOW THE FLOOR PANEL	N9
DIAGNOSIS CONNECTION	7cL	7cQ	IN PASSENGER'S FOOTWELL	G/H50
DME RELAY	6cM	6cM	CENTRAL ELECTRICS	J44
DME CONTROL UNIT	9eP	9eP	UNDER THE SEAT LEFT	B-F41
SPEED SENDER	15cP	15cP	BY ENGINE LEFT	A47
THROTTLE VALVE POTENTIOMETER, AUTOM. TRANSMISSION	15bN	15bN	ON THROTTLE VALVE ASSEMBLY	C50
THROTTLE VALVE SWITCH, MANUAL TRANSMISSION	15bN	15bN	ON THROTTLE VALVE ASSEMBLY	A44/45
PRESSURE SENSOR	10eP	10eP	UNDER THE SEAT LEFT	A42
PRESSURE WARNING SWITCH	1dO	1dO	IN LUGGAGE COMPARTMENT	F31
PRESSURE SWITCH AIR CONDITIONING SYSTEM	6bO	—	IN LUGGAGE COMPARTMENT	E30
TWO-TONE HORN I	3cL	3cL	IN WHEEL HOUSING FRONT RIGHT	F80
TWO-TONE HORN II	3cL	3cL	IN WHEEL HOUSING FRONT RIGHT	G80
SEPARATING FILTER FL	9dQ	9dQ	UNDER THE DOOR TRIM PANEL	E87
SEPARATING FILTER FR	9dL	9dL	UNDER THE DOOR TRIM PANEL	H87
CRASH SENSOR RIGHT	4cM	—	IN LUGGAGE COMPARTMENT	G112/113
CRASH SENSOR LEFT	4cP	—	IN LUGGAGE COMPARTMENT	F112/113
BLOWER FINAL STAGE	6bN	6bN	IN LUGGAGE COMPARTMENT	F30
BLOWER ENGINE COMPARTMENT	16cO	16cO	ON ENGINE	H30
BLOWER MOTOR RIGHT	6cM	6cM	IN LUGGAGE COMPARTMENT	G30
BLOWER MOTOR LEFT	6cP	6cP	IN LUGGAGE COMPARTMENT	F30
GONG RELAY	6cP	—	BY STEERING COLUMN LEFT	P53/54
HALL SENDER	17cO	17cO	ON DISTRIBUTOR	A46
REAR WINDOW WIPER RELAY	15bO	15bO	ON REAR WINDOW WIPER MOTOR	E71
HYDRAULIC UNIT ABS	3dP	3dP	IN LUGGAGE COMPARTMENT	C32
V-BELT CONTROL	17dO	17dO	ON ENGINE	A55/56
MAP ALTERATION- SWITCH	9eP	9eP	UNDER THE SEAT LEFT	G42
KICK-DOWN SWITCH	6dO	6dM	BY ACCELERATOR PEDAL UNDER FLOOR PANEL	M122
KNOCK SENSOR 1	15cP	15cP	BY ENGINE LEFT	A47
KNOCK SENSOR 2	16cN	16cN	BY ENGINE TOP	A48
CONDENSER BLOWER	2dQ	2dQ	IN WHEEL HOUSING FRONT LEFT	N21
FUEL PUMP	6eM	6eP	BEHIND THE BASE	J49
CLUTCH SWITCH CRUISE CONTROL	6dP	6dN	BY CLUTCH PEDAL UNDER FLOOR PANEL	P46
LONGITUDINAL ACCELERATION SENDER	7dN	7dN	IN CENTRE CONSOLE	E40
LOCKING DIFFERENTIAL VALVES LONGIT. AND TRANSVERSE	3dM	3dM	IN LUGGAGE COMPARTMENT	E31
IDLE SPEED SWITCH AUTOMATIC TRANSMISSION	15bN	15bN	ON ENGINE	C50
IDLE SPEED POSITIONER	15bN	15bN	ENGINE COMPARTMENT	H41
AIR FLOW SENSOR	16bO	16bO	ON ENGINE	A43
MICRO SWITCH ROOF RIGHT	9aN	9aN	AT CONVERTIBLE TOP FRAME	M79
MICRO SWITCH ROOF LEFT	9aO	9aO	AT CONVERTIBLE TOP FRAME	L79
MICRO SWITCH REAR SPOLIER EXTENDED	16bP	16bP	ON TAILGATE	G79
MICRO SWITCH REAR SPOILER RETRACTED	16bP	16bP	ON TAILGATE	G79
MICRO SWITCH TDC	12cL	12cL	BEHIND SIDE PANEL COVERING	G71
MICROSWITCH FOR TOP CONTROL	12cL	12cL	BEHIND SIDE PANEL COVERING	P71
MOTOR SUN ROOF	12aN	12aN	IN ROOF	G73
MOTOR TOP CONTROL RIGHT	15cN	15cN	BEHIND REAR SEAT	N71
MOTOR TOP CONTROL LEFT	15cO	15cO	BEHIND REAR SEAT	M71
MOTOR TOP LOCK RIGHT	9aN	9aN	AT CONVERTIBLE TOP FRAME	K/L79
MOTOR TOP LOCK LEFT	9aO	9aO	AT CONVERTIBLE TOP FRAME	J/K79
REAR FOG LIGHT CUTOUT RELAY	17dN	17dN	BEHIND REAR PANEL	A108
NTC HEATER FAN	16cP	16cP	ENGINE COMPARTMENT	G30
OIL PRESSURE SENDER/SWITCH	14cN	14cN	ON ENGINE	A54
OIL COOLER BLOWER	2dL	2dL	IN WHEEL HOUSING FRONT RIGHT	D21
OIL LEVEL GAGE	12cK	12cK	IN WHEEL HOUSING REAR RIGHT	E51/52

DESIGNATION, FUNCTION	POSITION IN VEHICLE LHD	RHD	NOTE	FIELD IN WIRING DIAGRAMM
OIL TEMPERATURE SENDER FOR INSTRUMENT	14cN	14cN	ON ENGINE	A53
OIL TEMPERATURE SENDER SENDER FOR OIL COOLER BLOWER	2dL	2dL	IN WHEEL HOUSING FRONT RIGHT	J21
SWITCH LIFTING	12dO	12dO	ON GEARBOX	D-F129
BRAKE BOOSTER PUMP	1dO	1dO	IN LUGGAGE COMPARTMENT	H39/40
LATERAL ACCELERATION SENDER ABS	7dN	7dN	IN CENTRE CONSOLE	D40
LATERAL ACCELERATION SENDER AUTOMATIC TRANSMISSION	7dN	7dN	IN CENTRE CONSOLE	K129
CONTROL RELAY REAR WINDOW DEFOGGER	16cP	16cP	CARRIER PLATE IN ENGINE COMPARTMENT	D/P29/30
RELAY CONDENSER BLOWER	6cM	6cM	CENTRAL ELECTRICS	L21
RELAY AC COMPRESSOR	16cP	16cP	CARRIER PLATE IN ENGINE COMPARTMENT	L30
RELAY TWO-TONE HORN	6cM	6cM	CENTRAL ELECTRICS	F78
RELAY POWER WINDOW REGULATOR	6cM	6cM	CENTRAL ELECTRICS	K18/19
RELAY FREQUENCY TRANSFORMER	6cM	6cM	CENTRAL ELECTRICS	K56/H51
RELAY BLOWER ENGINE COMPARTMENT	16cP	16cP	CARRIER PLATE IN ENGINE COMPARTMENT	J/K30
RELAY STARTER AUTOMATIC TRANSMISSION	6cM	6cM	CENTRAL ELECTRICS	N50
RELAY BACKUP LIGHT	7bQ	7bQ	IN LUGGAGE COMPARTMENT LEFT	L122
RELAY THERMO SWITCH CATALYTIC CONVERTER	6cM	6cM	CENTRAL ELECTRICS	L/M51
RELAY TERM.X	6cM	6cM	CENTRAL ELECTRICS	K44
RELAY TERM.15 E	6cM	6cM	CENTRAL ELECTRICS	K/L44
RELAY REAR FOG LIGHT- BACKUP LIGHT	6cM	6cM	CENTRAL ELECTRICS	J/K7
RELAY FRONT FOG LAMP	6cM	6cM	CENTRAL ELECTRICS	J7
RELAY OIL COOLER BLOWER	6cM	6cM	CENTRAL ELECTRICS	K21
RELAY BRAKE BOOSTER PUMP	6cM	6cM	CENTRAL ELECTRICS	H34/35
RELAY SUN ROOF	6cM	6cM	CENTRAL ELECTRICS	H75
RELAY DAYTIME RUNNING LIGHT CANADA	6cM	6cM	CENTRAL ELECTRICS	D1
BACKUP LIGHT SWITCH	14dN	14dN	BY TRANSMISSION RIGHT	N1
SHIFT VALVE RESONANCE FLAP	15bN	15bN	ON ENGINE	G41
WINDSHIELD WASHING FLUID PUMP	3cQ	3cQ	BY WASHING FLUID RESERVOIR IN WHEEL HOUSING FL	A78
WINDSHIELD WASHING FLUID PUMP RS	4cM	4cQ	IN LUGGAGE COMPARTMENT	A78
FUSES ENGINE COMPARTMENT	16cP	16cP	CARRIER PLATE IN ENGINE COMPARTMENT	L28
HEADLIGHT CLEANER PUMP	3cQ	3cQ	BY WASHING FLUID RESERVOIR IN WHEEL HOUSING FL	A79/80
HEADLIGHT CLEANER RELAY	6cM	6cM	CENTRAL ELECTRICS	E78
STARTER	14dN	14dN	BY CLUTCH HOUSING RIGHT	P49/50
DRIVE CRUISE CONTROL	15cO	15cO	ON ENGINE	N43/44
CONTROL UNIT ABS	2dM	2dM	IN LUGGAGE COMPARTMENT	A33-38
CONTROL UNIT AIRBAG	6cO	—	ON INTRUMENT PANEL	J114/115
CONTROL UNIT ALARM SYSTEM/CENTRAL LOCKING SYSTEM	9eM	9eM	UNDER THE SEAT RIGHT	J-M12
CONTROL UNIT AUTOMATIC TRANSMISSION	10dP	10dP	UNDER THE SEAT LEFT	C-G122
CONTROL UNIT CONVERTIBLE TOP	6cP	6cP	ON INTRUMENT PANEL	J/K71
CONTROL UNIT INSTRUMENT LIGHT	7bQ	7bQ	IN LUGGAGE COMPARTMENT LEFT	K1
CONTROL UNIT REAR SPOILER	6cM	6cP	INSIDE FIREWALL RIGHT/LEFT	P74-76
CONTROL UNIT HEATING, AIR CONDITIONING	7cO	7cN	ON INTRUMENT PANEL	B-F21
CONTROL UNIT SELECTOR LEVER LOCK	6cM	6cM	CENTRAL ELECTRICS	D/P129/130
CONTROL UNIT CRUISE CONTROL	9eN	9eN	UNDER THE SEAT RIGHT	P43/44
BUZZER CONTACT	7cP	7cM	ON IGNITION LOCK	P56
FUEL LEVEL SENDER	5cM	5cP	IN FUEL TANK	K51
TANK VENTING VALVE	15cN	15cN	BY ENGINE TOP	H41
TEMPERATURE MOTOR	15cP	15cP	BY ENGINE LEFT	A45
VARIANT IDENTIFIKATION SWITCH	9eP	9eP	UNDER THE SEAT LEFT	G43
RESISTOR BLOWER	16dP	16dP	ENGINE COMPARTMENT	J30
RESISTOR FOR BLOWER CONDENSER	2dQ	2dQ	IN WHEEL HOUSING FRONT LEFT	M21
RESISTOR OIL COOLER BLOWER	2dL	2dL	IN WHEEL HOUSING FRONT RIGHT	M21
WARNING BUZZER	7cP	7cP	ON INTRUMENT PANEL	K60
WIPER INTERMITTENT CONTROL RELAY	6cM	6cM	CENTRAL ELECTRICS	F/G75
CENTRAL ELECTRICS	6cM	6cM	IN LUGGAGE COMPARTMENT	—
CENTRAL INFORMER	6cP	6cP	ON STEERING COLUMN	H32,F/G/H59
IGNITION CONTROL UNIT I	15cP	15cP	IN ENGINE COMPARTMENT LEFT	K41
IGNITION CONTROL UNIT II	15cP	15cP	IN ENGINE COMPARTMENT LEFT	J41
IGNITION COIL I	15cQ	15cQ	IN ENGINE COMPARTMENT LEFT	L41
IGNITION COIL II	15cQ	15cQ	IN ENGINE COMPARTMENT LEFT	K41

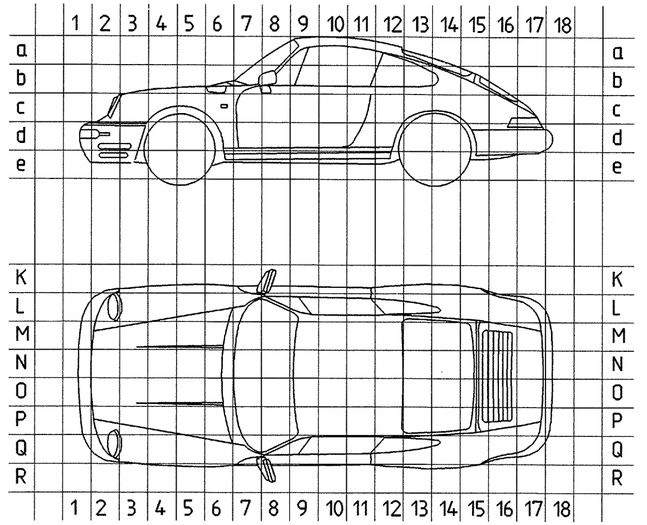

12

911 Carrera 2/4 MODEL 92 SHEET 13

PLUG CONNECTIONS, GROUND POINTS, ABBREVIATIONS

PLUG CONNECTIONS

CODE	NUMBER OF PINS	DESIGNATION, FUNCTION	POSITION IN VEHICLE LHD	POSITION IN VEHICLE RHD	NOTE	FIELD
T1	6	IGNITION LOCK	6cP	6cM	BY STEERING COLUMN LEFT	L48
T2	10	ABS	6cL	6cL	IN LUGGAGE COMPARTMENT RIGHT	C36/37, K12, 0152
T5	14	HEATER, AIR CONDITIONER	6cM	6cM	UNDER INSTRUMENT PANEL RIGHT	G25/26
T6	6	AIRBAG	7dN	7dN	IN CENTRE CONSOLE	F/G117
T7	14	DOOR DRIVER'S SIDE	6cQ	6cL	UNDER INSTRUMENT PANEL LEFT	A88,F88,E/F17
T8	10	DOOR DRIVER'S SIDE	6cQ	6cL	UNDER INSTRUMENT PANEL LEFT	C16
T9	2	AIRBAG	7dN	7dN	IN CENTRE CONSOLE	G117
T10	14	REAR WINDOW SHELF	12cL	12cL	BEHIND SIDE PANEL COVERING	09,N13,027,E/F73,H72
T11	12	DOOR PASSENGER'S SIDE	6cL	6cQ	UNDER INSTRUMENT PANEL RIGHT	E14,D86,H88
T12	10	DOOR PASSENGER'S SIDE	6cL	6cQ	UNDER INSTRUMENT PANEL RIGHT	B59,C14
T15	6	DME	9eP	9eP	UNDER THE SEAT LEFT	L43,C14,B53
T16	14	DME	9eP	9eP	UNDER THE SEAT LEFT	F45/46,B55
T18	2	LICENSE PLATE LIGHTS	17dL	17dL	TAIL LIGHTS RIGHT	04
T19	2	OIL LEVEL GAGE	15cM	15cM	IN ENGINE COMPARTMENT RIGHT	E52
T20	3	GLOVE BOX LAMP AIRBAG	6cL	—	UNDER INSTRUMENT PANEL RIGHT	017
T21	10	TAILGATE	15cL	15cL	IN ENGINE COMPARTMENT RIGHT	N76,013,010
T22	4	INSIDE LIGHTS, SUN ROOF	15bM	15bM	BELOW THE PARCEL TRAY	H73,012
T23	2	INSIDE LIGHTS CONVERTIBLE, TARGA	6cQ	6cQ	UNDER INSTRUMENT PANEL LEFT	012
T24	2	SIDE TURN SIGNAL LEFT	7bQ	7bQ	IN LUGGAGE COMPARTMENT ON SIDE MEMBER LEFT	D/E9
T25	2	SIDE TURN SIGNAL RIGHT	7bL	7bL	IN LUGGAGE COMPARTMENT ON SIDE MEMBER RIGHT	C2
T27	2	LUGGAGE COMPARTMENT LIGHT	7bL	7bL	IN LUGGAGE COMPARTMENT ON SIDE MEMBER RIGHT	016
T30	14	NO. 16 MOTOR	16cP	16cP	CARRIER PLATE IN ENGINE COMPARTMENT	N/03,J27/28,048/49,B54
T31	12	MOTOR, DME	16cP	16cP	CARRIER PLATE IN ENGINE COMPARTMENT	D/E47,B53
T34	14	HEATER, AIR CONDITIONER	6cM	6cM	IN LUGGAGE COMPARTMENT RIGHT	G23/24
T35	12	CONVERTIBLE TOP	12cL	12cL	BEHIND SIDE PANEL COVERING	K73/74
T36	6	REAR WINDOW	15bM	15bM	BELOW THE PARCEL TRAY	09,028
T38	7	NO.4, FRONT LIGHTS	3cL	3cL	IN WHEEL HOUSING FRONT RIGHT	C5/6
T39	5	NO.4, FRONT LIGHTS	3cL	3cL	IN WHEEL HOUSING FRONT RIGHT	C6/7
T40	30	AUTOMATIC TRANSMISSION	9eP	9eP	UNDER THE SEAT LEFT	H124/125
T41	12	AUTOMATIC TRANSMISSION	9eP	9eP	UNDER THE SEAT LEFT	C/D50,E127
T42	6	REAR PACKAGE TRAY	9eM	9eM	UNDER THE SEAT RIGHT	H16

GROUND POINTS

CODE	NOTE	POSITION IN VEHICLE LHD
GP I	LUGGAGE COMPARTMENT, WHEEL HOUSING LEFT	2cP
GP II	LUGGAGE COMPARTMENT, WHEEL HOUSING RIGHT	2cM
GP III	ON FIREWALL	—
GP IV	GROUND FOR POWER CONSUMERS, UNDER SEAT LEFT	11eP
GP V	ELECTRONICS, UNDER SEAT LEFT	10eP
GP VI	CENTRAL ELECTRICS, ON SIDE MEMBER RIGHT	6bL
GP VII	ANTENNA AMPLIFIER ON SIDE MEMBER LEFT	7bL
GP VIII	INSIDE LIGHT CONVERTIBLE, ROOF CENTRE FRONT	9aN
GP IX	INSIDE LIGHT, ROOF RIGHT	11aL
GP IX	INSIDE LIGHT, ROOF LEFT	11aP
GP X	BATTERY, LUGGAGE COMPARTMENT LEFT	3eP
GP XI	GROUND STRAP (STARTER, TRANSMISSION, ENGINE, BODY)	14cM
GP XII	ENGINE COMPARTMENT REAR LEFT	15cQ
GP XIII	MOTOR LEFT	15cO
GP XIV	ENGINE COMPARTMENT REAR RIGHT	15cL
GP XV	INSTRUMENTS, SIDE MEMBER LEFT	7bQ
GP XVI	COMBINED LEAD REAR LEFT	13dP
GP XVII	COMBINED LEAD REAR RIGHT	12dM
GP XVIII	COMBINED LEAD FRONT RIGHT	4cM
GP XIX	COMBINED LEAD FRONT LEFT	4cP
GP XX	SEAT CROSS MEMBER, UNDER SEAT RIGHT	8eL
GP XXI	GROUND FOR POWER CONSUMERS, CONNECTION CRANK CASE	16cN0
GP XXII	ELECTRONICS, CONNECTION CRANK CASE	16cN0

ABBREVIATIONS

CODE	MEANING	CODE	MEANING
ABS	ANTILOCK BRAKING SYSTEM	PIN	PIN
AC	AIR CONDITIONING SYSTEM	POT	POTENTIOMETER
SS	SPEED SENSOR	PSD	PORSCHE LIMITED SLIP DIFFERENTIAL
DEF	DEFROST	ROK	TIRE PRESSURE CONTROL
ESO	ENGINE-SPEED SENSOR OUTPUT	ROW	REST OF WORLD
DME	DIGITAL ENGINE ELECTRONICS	RHD	RIGHT-HAND DRIVE
EZK	ELECTRIC IGNITION SYSTEM WITH KNOCK CONTROL	CL	CLOSE
FCU	FREQUENCY CONVERTER UNIT	SA	SAUDI ARABIA
RA	REAR AXLE	CU	CONTROL UNIT
HF	HIGH FREQUENCY	WP	WELD POINT
RL	REAR LEFT	HCS	HEADLIGHT CLEANING SYSTEM
RR	REAR RIGHT	PL	PLUG
IC	INSTRUMENT CLUSTER	DP	DISCONNECTING POINT
TE	TERMINAL	USA	USA
SCS	COMBINED STEERING COLUMN SWITCH	FA	FRONT AXLE
WL	WIRING LOOM	FL	FRONT LEFT
LED	LIGHT-EMITTING DIODE	FR	FRONT RIGHT
LHD	LEFT-HAND DRIVE	CP	CONNECTING POINT
GP	GROUND POINT	WW	WORLDWIDE
LF	LOW FREQUENCY	CES	CENTRAL ELECTRICS
FOG	FOG LIGHT	ADL	ADDITIONAL DRIVING LIGHTS
NO	NUMBER	CLS	CENTRAL LOCKING SYSTEM
RFL	REAR FOG LIGHT		
NTC	NEGATIVE TEMPERATURE COEFFICIENT		
OP	OPEN		

M - NUMBERS

M 139	ADJUSTABLE SEAT HEATING, LEFT SEAT
M 193	JAPAN VERSION
M 249	AUTOMATIC TRANSMISSION
M 340	ADJUSTABLE SEAT HEATING, RIGHT SEAT
M 383	SPORT SEAT LEFT ELECTRIC HEIGHT ADJUSTMENT
M 387	SPORT SEAT RIGHT ELECTRIC HEIGHT ADJUSTMENT
M 425	REAR WINDOW WIPER
M 437	COMFORT SEAT LEFT
M 438	COMFORT SEAT RIGHT
M 439	ELECTRIC CONVERTIBLE TOP
M 454	CRUISE CONTROL
M 513	LUMBAR SUPPORT SEAT RIGHT
M 553	USA - CANADA VERSION
M 562	AIRBAG
M 573	AIR CONDITIONING SYSTEM
M 576	WITHOUT REAR FOG LIGHT
M 586	LUMBAR SUPPORT SEAT LEFT
M 602	HIGH MOUNTED STOP LIGHT
M 650	SUN ROOF
M 659	ON-BOARD COMPUTER

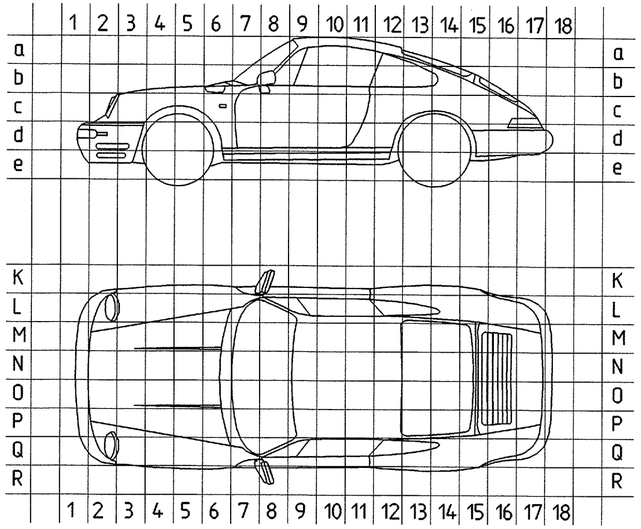

911 Carrera 2/4 MODEL 92 SHEET 14

ADDITIONAL WIRING DIAGRAM TRAILER COUPLING

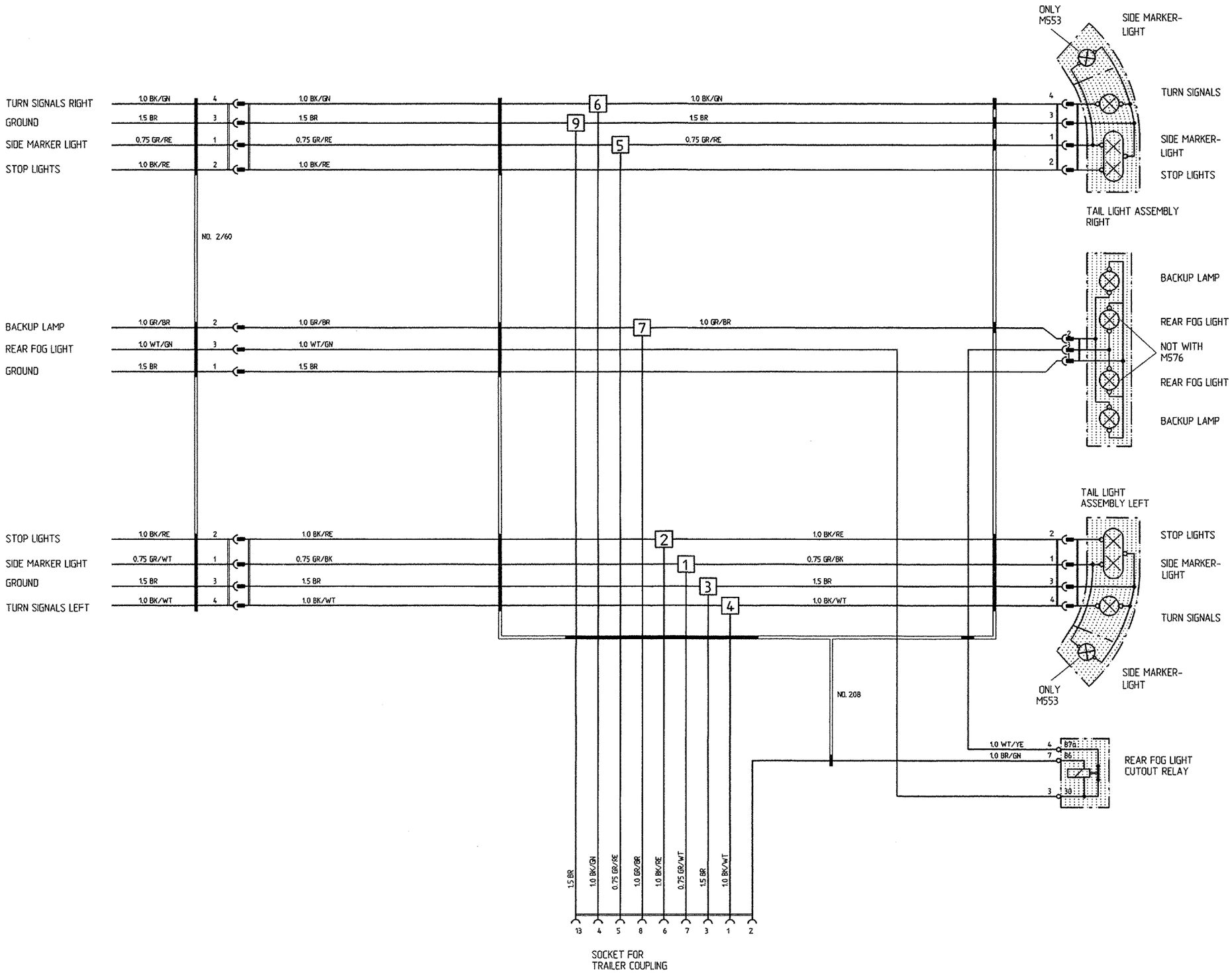

FLASHER
SEE 97-111

INDICATOR LIGHTS
SEE 97-125

14

AIRBAG

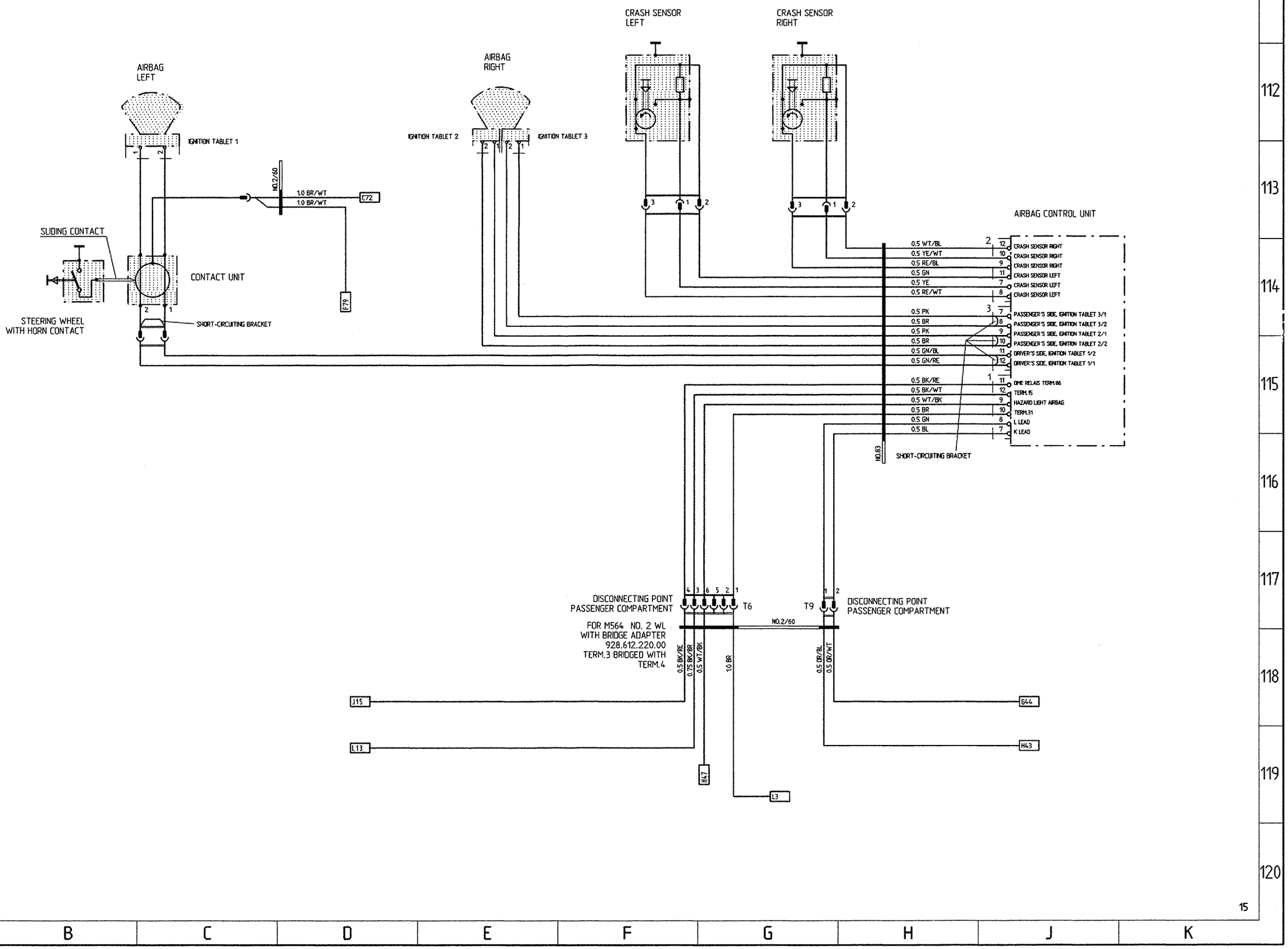
AIRBAG LEFT
IGNITION TABLET 1
AIRBAG RIGHT
IGNITION TABLET 2
IGNITION TABLET 3
CRASH SENSOR LEFT
CRASH SENSOR RIGHT
AIRBAG CONTROL UNIT
SLIDING CONTACT
CONTACT UNIT
STEERING WHEEL WITH HORN CONTACT
SHORT-CIRCUITING BRACKET
NO.2/60
1.0 BR/WT
1.0 BR/WT
C72
F79
0.5 WT/BL
0.5 YE/WT
0.5 RE/BL
0.5 GN
0.5 YE
0.5 RE/WT
CRASH SENSOR RIGHT
CRASH SENSOR RIGHT
CRASH SENSOR RIGHT
CRASH SENSOR LEFT
CRASH SENSOR LEFT
CRASH SENSOR LEFT
0.5 PK
0.5 BR
0.5 PK
0.5 BR
0.5 GN/BL
0.5 GN/RE
PASSENGER'S SIDE, IGNITION TABLET 3/1
PASSENGER'S SIDE, IGNITION TABLET 3/2
PASSENGER'S SIDE, IGNITION TABLET 2/1
PASSENGER'S SIDE, IGNITION TABLET 2/2
DRIVER'S SIDE, IGNITION TABLET 1/2
DRIVER'S SIDE, IGNITION TABLET 1/1
0.5 BK/RE
0.5 BK/WT
0.5 WT/BK
0.5 BR
0.5 GN
0.5 BL
DME RELAIS TERM.86
TERM.15
HAZARD LIGHT AIRBAG
TERM.31
L LEAD
K LEAD
NO.63
SHORT-CIRCUITING BRACKET
DISCONNECTING POINT PASSENGER COMPARTMENT
T6
T9
DISCONNECTING POINT PASSENGER COMPARTMENT
FOR M564 NO. 2 WL WITH BRIDGE ADAPTER 928.612.220.00 TERM.3 BRIDGED WITH TERM.4
NO.2/60
0.5 BK/RE
0.75 BK/BR
0.5 WT/BK
1.0 BR
0.5 OR/BL
0.5 OR/WT
J15
L13
H47
L3
G44
H43
15

911 Carrera 2 MODEL 92 SHEET 16

AUTOMATIC TRANSMISSION

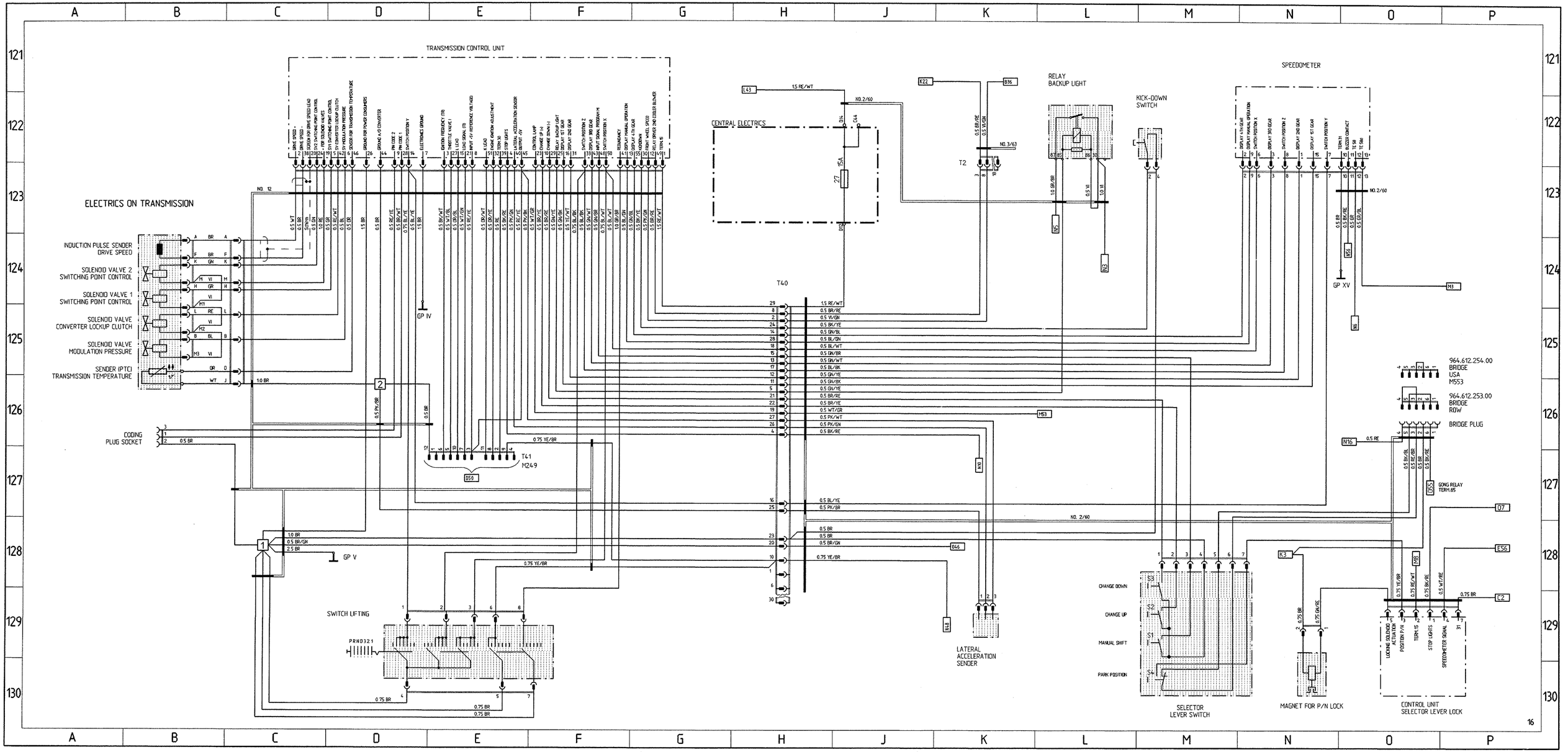

BK = BLACK WT = WHITE RE = RED GN = GREEN YE = YELLOW GR = GREY BR = BROWN BL = BLUE VI = VIOLET PK = PINK OR = ORANGE

DIFFERENT CIRCUITS

REAR FOG LIGHT

R01

REAR FOG LIGHT/
BACKUP LIGHT

R31

FOG LIGHT

ROW

JAPAN

R12 BRIDGE

RFL

REAR FOG LIGHT SWITCH

BATTERY
MAIN SWITCH
DME

OTHER CIRCUITS
SEE SHEET 5

CENTRAL ELECTRICS

R41

DME RELAY

7.5A

15A

NO.2/60

F12

K14

15E

15

X

30

31

NO.22

35.0 BK

1.5 RE

4.0 RE

0.5 BK/BR

GP VI

A33

NO.3/63

PLUG Z

BATTERY
MAIN SWITCH
(EMERGENCY-OFF-SWITCH)

35 BK

GP X

BATTERY

17

BK = BLACK WT = WHITE RE = RED GN = GREEN YE = YELLOW OR = ORANGE
GR = GREY BR = BROWN BL = BLUE VI = VIOLET PK = PINK

Changes to the circuit diagram for the 911 Carrera 2/4, model 92

Sheet 6, M - P 53/54

Wire from gong relay pin 4 to clock 1/14 is deleted
Wire from gong relay pin 5 to clock 1/14 is added.

Please alter the circuit diagram accordingly.

Printed in Germany – XVII, 1992

Wiring Diagram
Type 911 Carrera 2 and 4 Model 93

	Coordinates	
Sheet 1	1 - 10	Lights
Sheet 2	11 - 20	Alarm System, Central Locks, Mirror, Power Window Regulator, Inside Lights
Sheet 3	21 - 30	Heater, AC, Coolant Fan, Rear Window De-fogger
Sheet 4	31 - 40	ABS, Porsche Dynamic AWD Control (Carrera 4)
Sheet 4a	31 - 40	ABS (Carrera 2)
Sheet 4b	31 - 40	ABS Turbo look (Carrera 2)
Sheet 5	41 - 50	Motor, Ignition, Cruise Control
Sheet 6	51 - 60	Instruments, Sensor, Central Informer, On-board computer
Sheet 7	61 - 70	Seats
Sheet 8	71 - 80	Rear Spoiler, Two-Tone Horns, Wipe- and Wash Cleaners, Sun Roof, Convertible Top
Sheet 9	81 - 90	Radio, Telephone
Sheet 10	91 - 100	Fog Light, Rear Fog Light
Sheet 11		Central Electric
Sheet 12		Construction Components
Sheet 13		Plug Connections, Ground Points, M-Numbers, Abbreviations
Sheet 14	101 - 110	Trailer Coupling
Sheet 15	111 - 120	Airbag
Sheet 16	121 - 130	Tiptronic (Carrera 2)
Sheet 17	131 - 140	911 Carrera RS

Wiring Diagram
Type 911 Carrera 2 and 4 Model 93

The wiring diagram consists of *12 individual wiring diagrams*, 1 sheet *construction components* and 1 sheet *plug connections and ground points*. These are divided into coordinate fields.

Each individual wiring diagram contains a part of the central-electrics box in a dashdotted frame.

This part of the central-electrics box shows all the lines and relays necessary for the individual wiring diagram.

The earth/ground points are identified by "GP" and their location is shown in a vehicle diagram.

The 10-pin connectors on the central-electrics box are clipped together out of 3 parts, the 20-pin connectors are clipped together out of 5 parts.

Part 1, with the moduled-on fastening lug, is the "starting element".

Parts 2,3 and 4 are "module elements".

The 10-pin connectors only contents one "module element".

Start- and module elements are identified by the numbers 1.....5.

Part 5 ist a "coding element".

The designations of the plug connections in the wiring diagram refer to the "starting element" from, for example, B 11.....15, and to the first module element from B 21.....25.

Printed in Germany – XVII, 1992

LIGHTS

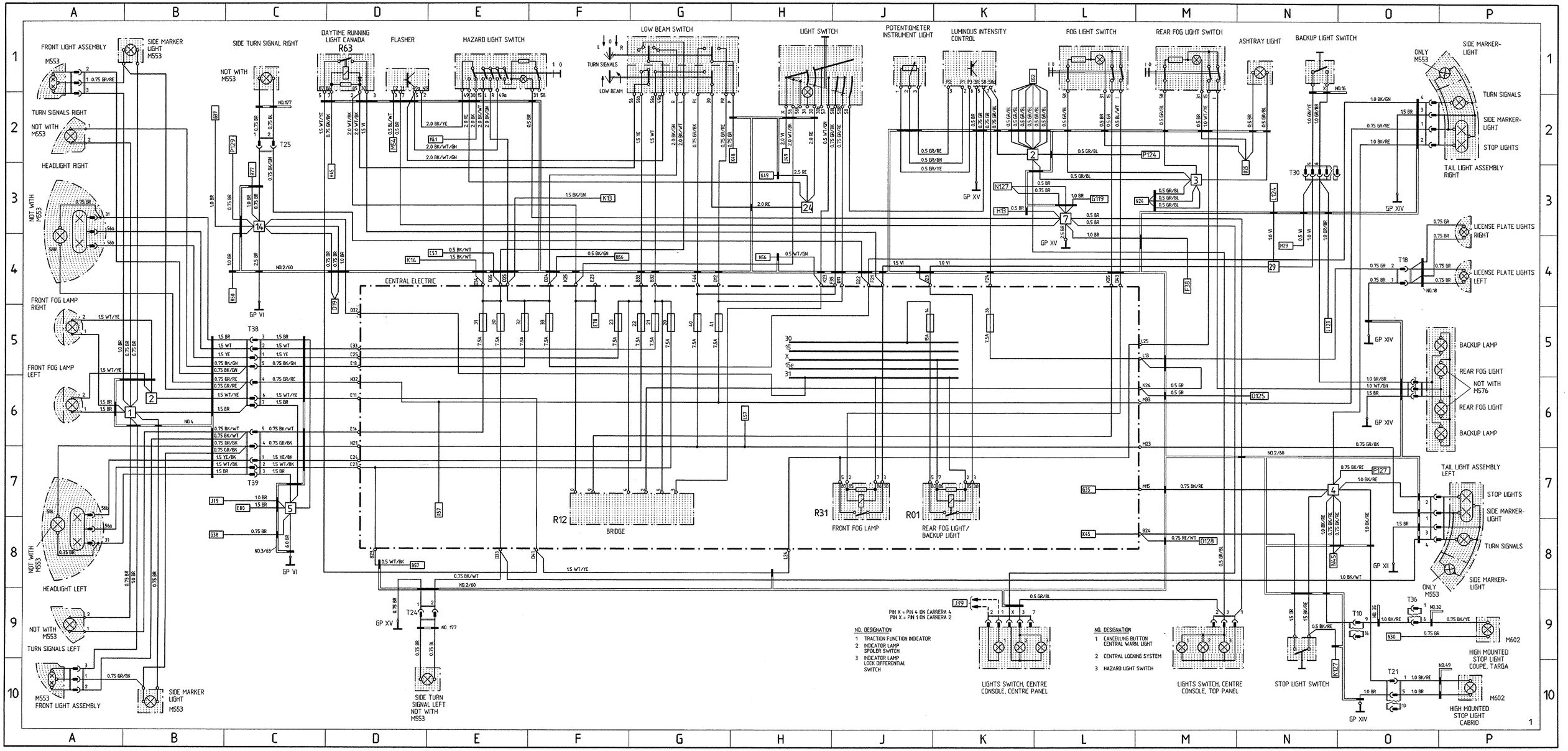
FRONT LIGHT ASSEMBLY
SIDE MARKER LIGHT M553
SIDE TURN SIGNAL RIGHT
DAYTIME RUNNING LIGHT CANADA R63
FLASHER
HAZARD LIGHT SWITCH
LOW BEAM SWITCH
LIGHT SWITCH
POTENTIOMETER INSTRUMENT LIGHT
LUMINOUS INTENSITY CONTROL
FOG LIGHT SWITCH
REAR FOG LIGHT SWITCH
ASHTRAY LIGHT
BACKUP LIGHT SWITCH
TURN SIGNALS RIGHT
HEADLIGHT RIGHT
FRONT FOG LAMP RIGHT
FRONT FOG LAMP LEFT
HEADLIGHT LEFT
TURN SIGNALS LEFT
SIDE MARKER LIGHT M553
SIDE TURN SIGNAL LEFT NOT WITH M553
CENTRAL ELECTRIC
R12 BRIDGE
R31 FRONT FOG LAMP
R01 REAR FOG LIGHT/ BACKUP LIGHT
PIN X = PIN 4 ON CARRERA 4
PIN X = PIN 1 ON CARRERA 2
NO. DESIGNATION
1 TRACTION FUNCTION INDICATOR
2 INDICATOR LAMP SPOILER SWITCH
3 INDICATOR LAMP LOCK DIFFERENTIAL SWITCH
LIGHTS SWITCH, CENTRE CONSOLE, CENTRE PANEL
NO. DESIGNATION
1 CANCELLING BUTTON CENTRAL WARN. LIGHT
2 CENTRAL LOCKING SYSTEM
3 HAZARD LIGHT SWITCH
LIGHTS SWITCH, CENTRE CONSOLE, TOP PANEL
STOP LIGHT SWITCH
TAIL LIGHT ASSEMBLY RIGHT
TAIL LIGHT ASSEMBLY LEFT
LICENSE PLATE LIGHTS RIGHT
LICENSE PLATE LIGHTS LEFT
BACKUP LAMP
REAR FOG LIGHT
HIGH MOUNTED STOP LIGHT COUPE, TARGA
HIGH MOUNTED STOP LIGHT CABRIO
GP VI
GP XV
GP XIV
GP XII

911 Carrera 2/4 MODEL 93 SHEET 2

ALARM SYSTEM, CENTRAL LOCKING SYSTEM, MIRROR, POWER WINDOW REGULATOR, INSIDE LIGHTS

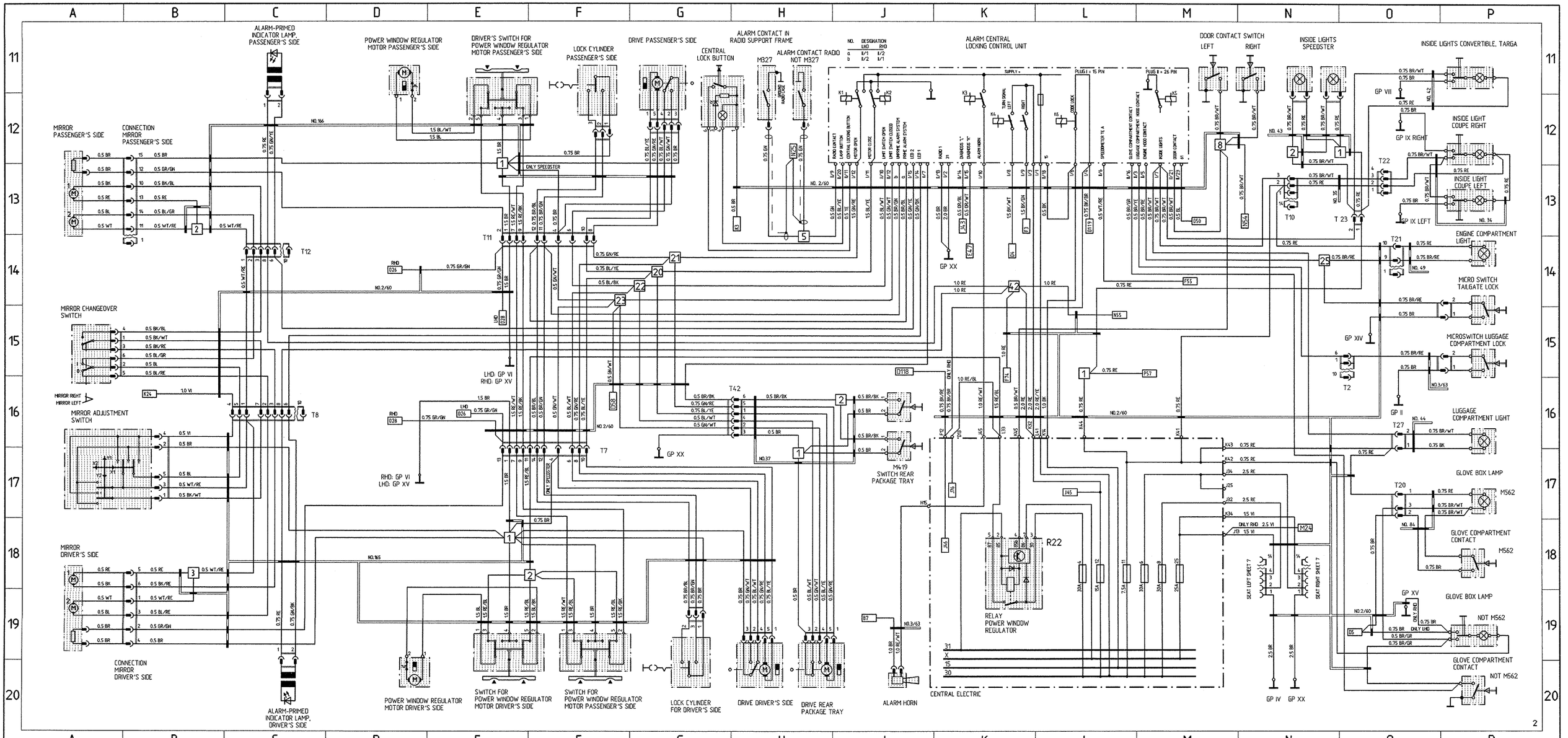

Printed in Germany - XVII, 1992

97-153

BK = BLACK WT = WHITE RE = RED GN = GREEN YE = YELLOW GR = GREY BR = BROWN BL = BLUE VI = VIOLET PK = PINK OR = ORANGE

911 Carrera 2/4 MODEL 93 SHEET 3

HEATER,AC

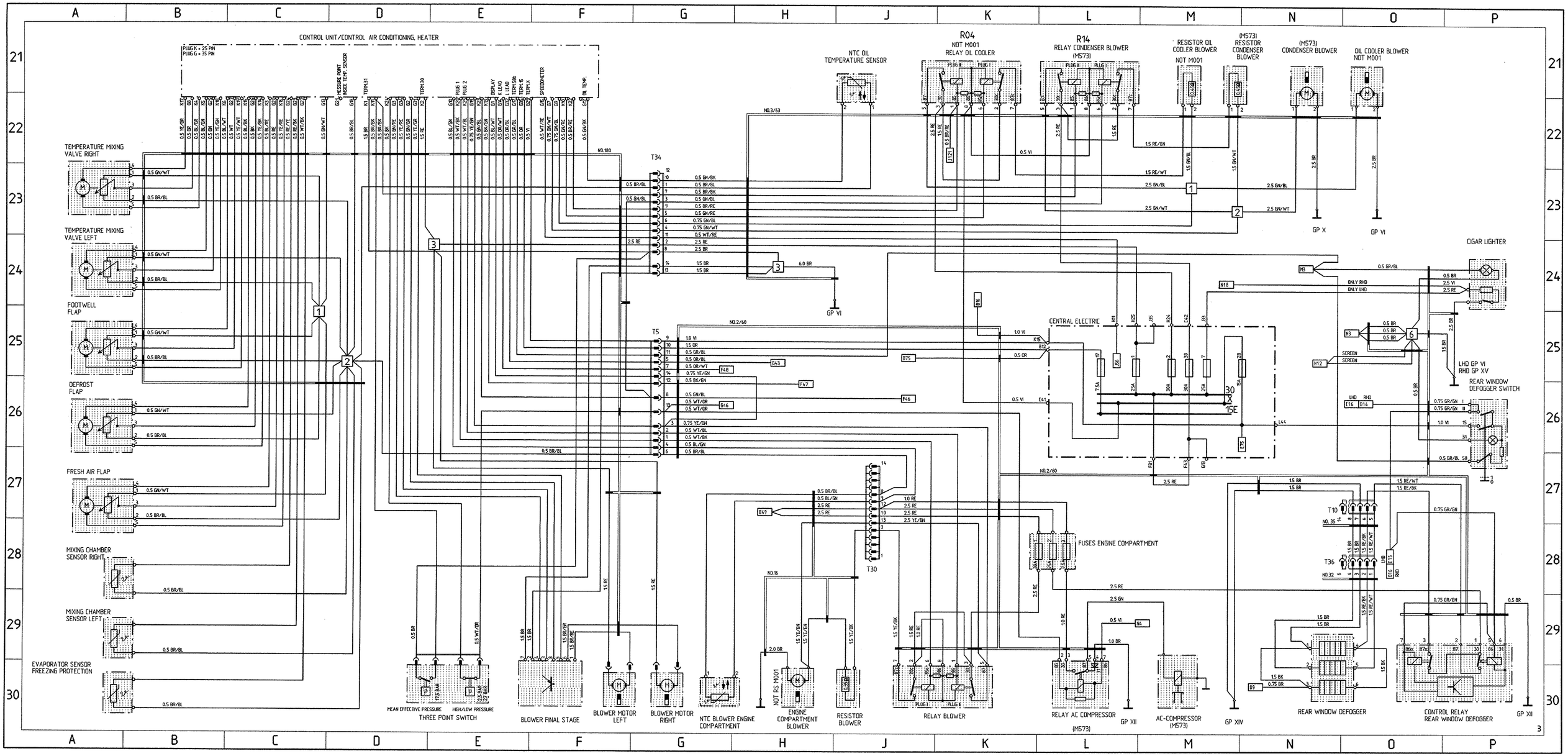

BK = BLACK WT = WHITE RE = RED GN = GREEN YE = YELLOW GR = GREY BR = BROWN BL = BLUE VI = VIOLET PK = PINK OR = ORANGE

911 Carrera 4 MODEL 93 SHEET 4

ABS, PORSCHE DYNAMIC AWD CONTROL

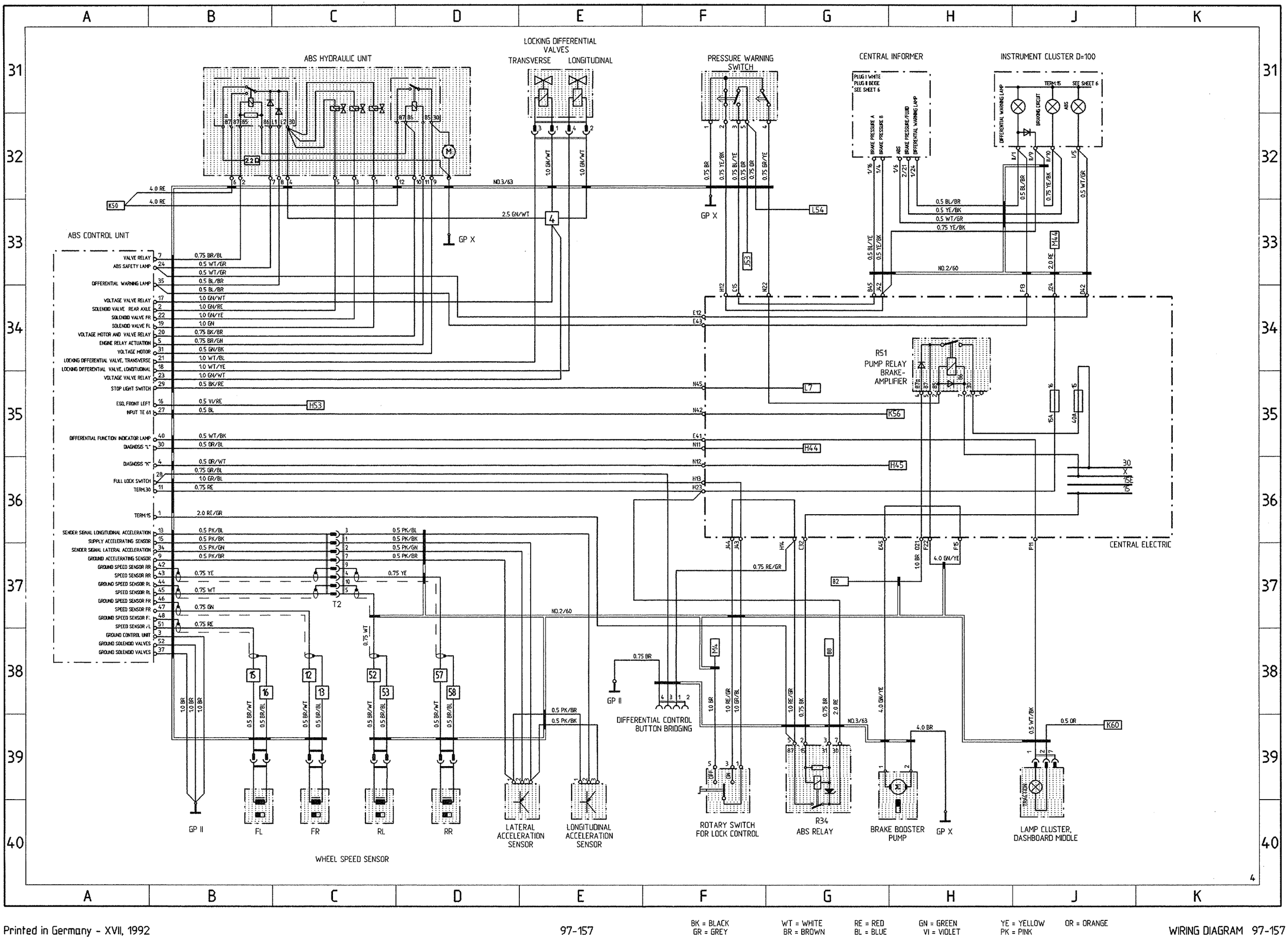

Printed in Germany - XVII, 1992

97-157

BK = BLACK GR = GREY WT = WHITE BR = BROWN RE = RED BL = BLUE GN = GREEN VI = VIOLET YE = YELLOW PK = PINK OR = ORANGE

WIRING DIAGRAM 97-157

911 Carrera 2 MODEL 93 SHEET 4A

ABS

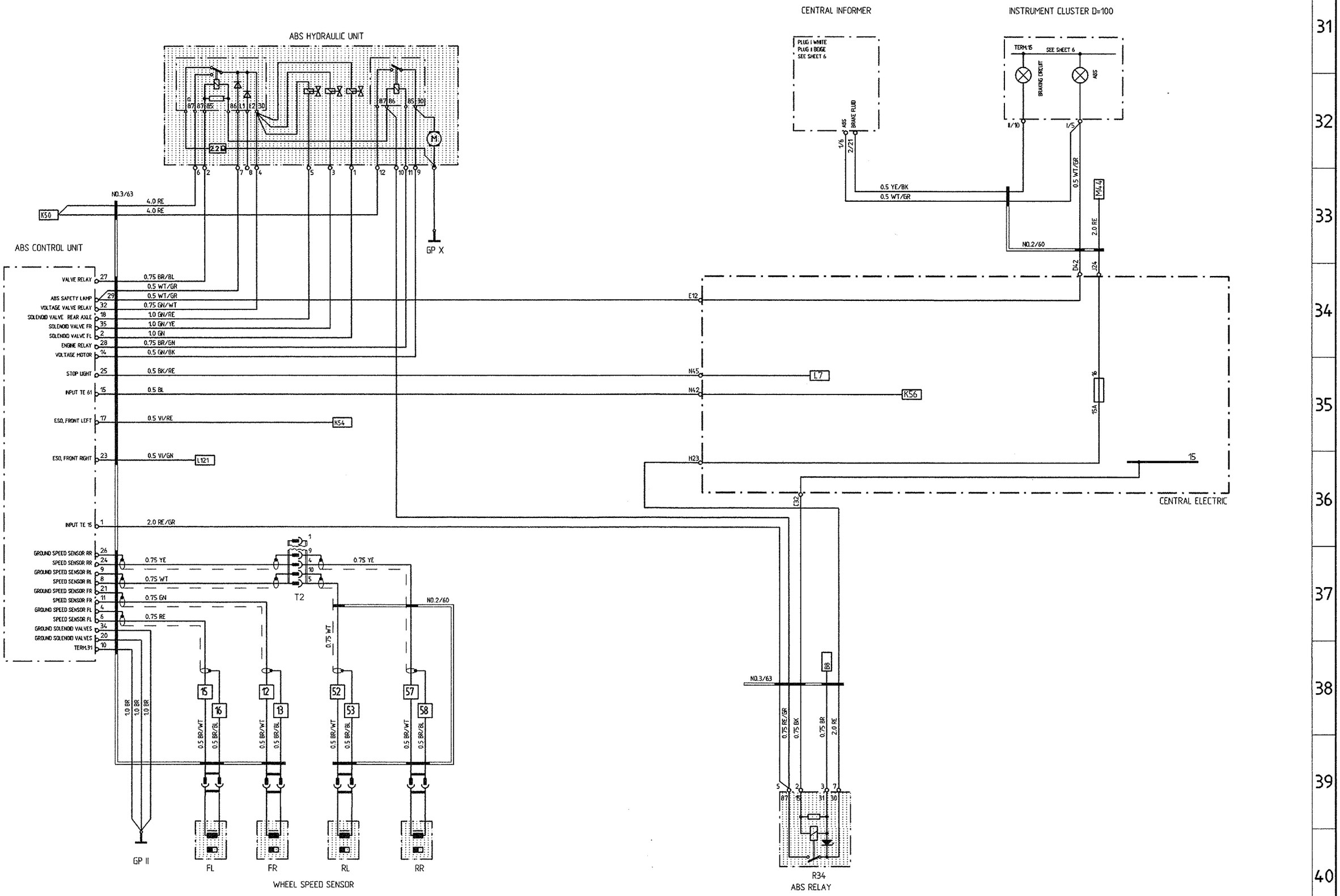

911 Carrera 2 MODEL 93 SHEET 4B

ABS TURBO LOOK

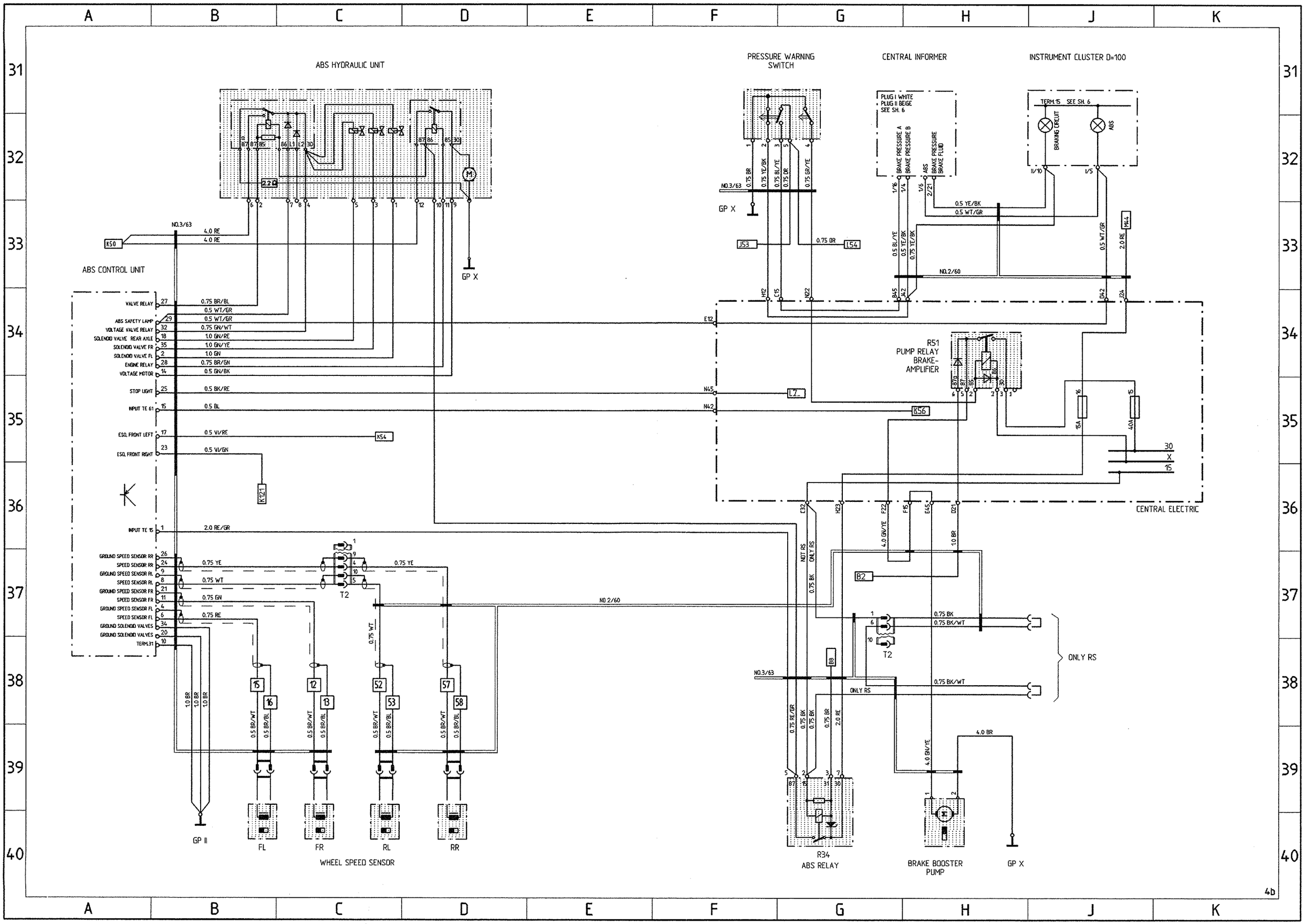

BK = BLACK GR = GREY WT = WHITE BR = BROWN RE = RED BL = BLUE GN = GREEN VI = VIOLET YE = YELLOW PK = PINK OR = ORANGE

911 Carrera 2/4 MODEL 93 SHEET 5

MOTOR, FUEL, IGNITION, CRUISE CONTROL

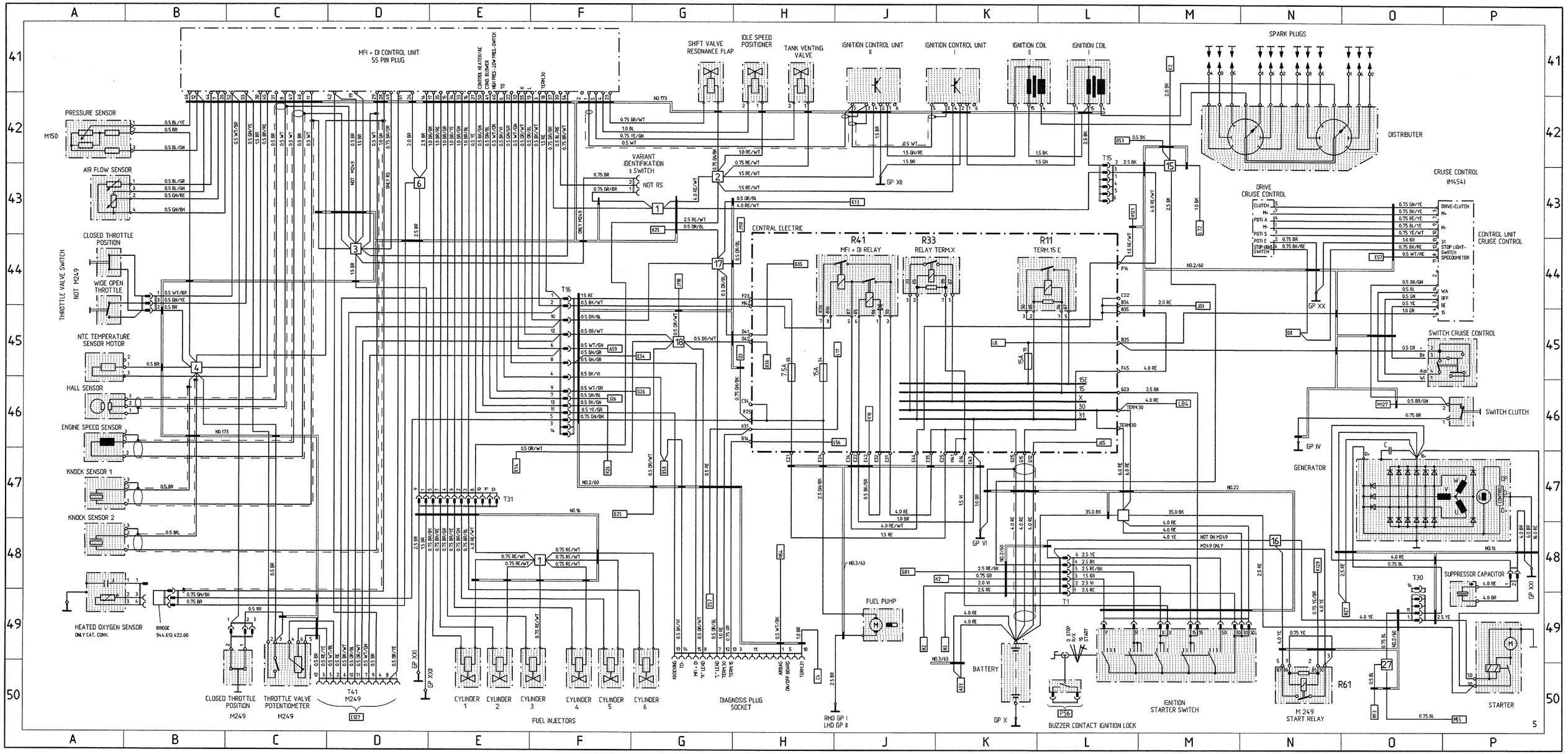

911 Carrera 2/4 MODEL 93 SHEET 6

INSTRUMENTS AND SENSOR

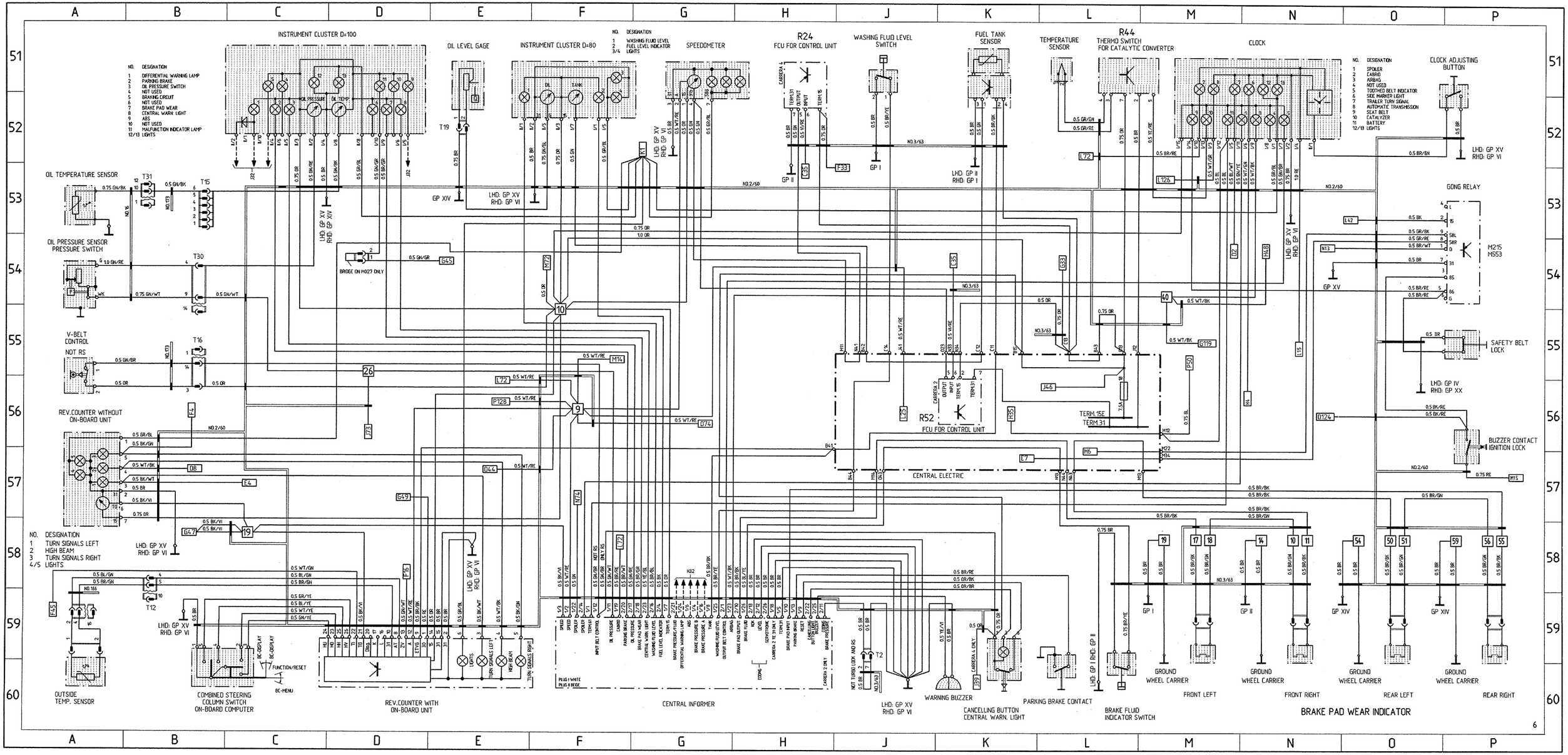

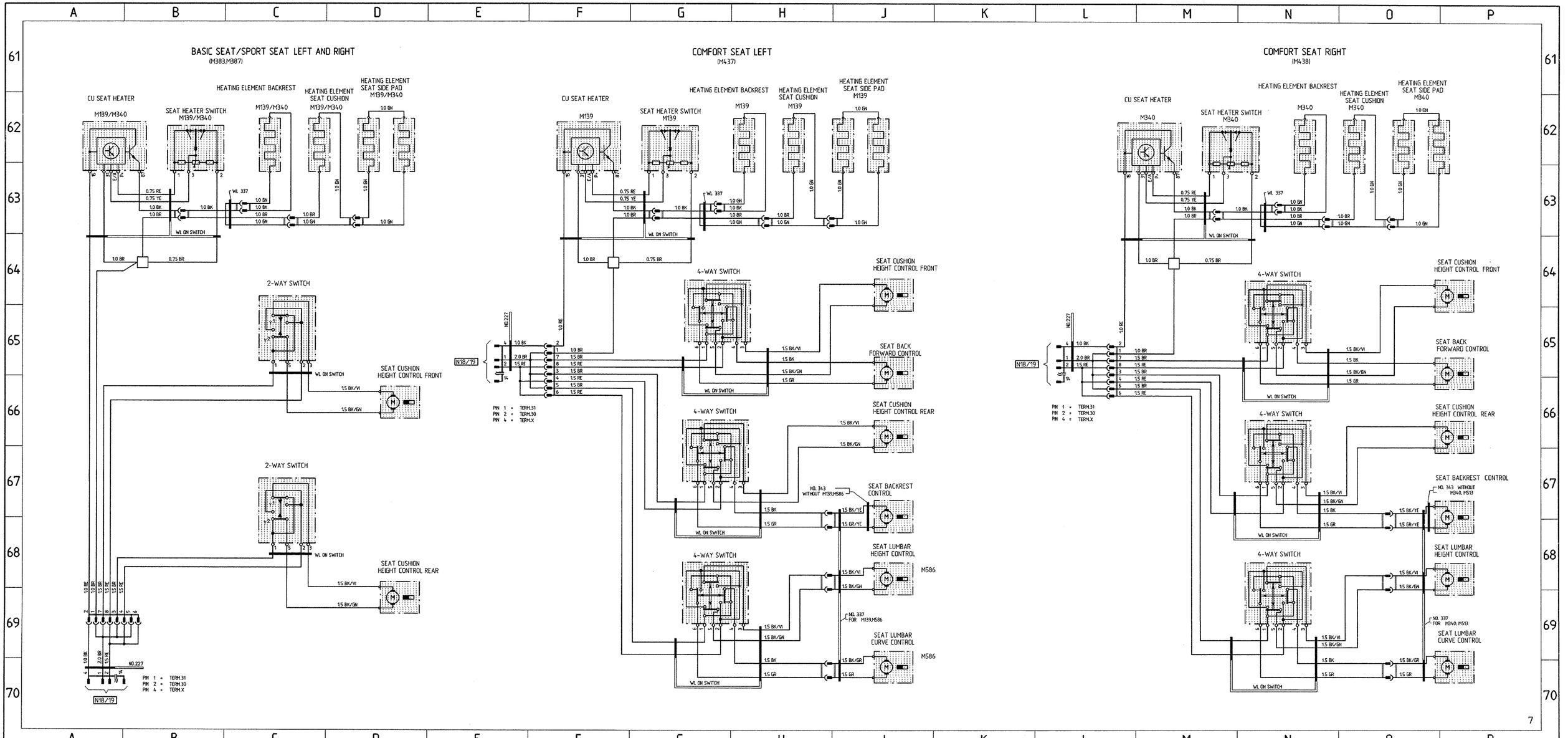
BASIC SEAT/SPORT SEAT LEFT AND RIGHT
(M383,M387)
CU SEAT HEATER
M139/M340
SEAT HEATER SWITCH M139/M340
HEATING ELEMENT BACKREST M139/M340
HEATING ELEMENT SEAT CUSHION M139/M340
HEATING ELEMENT SEAT SIDE PAD M139/M340
WL ON SWITCH
2-WAY SWITCH
SEAT CUSHION HEIGHT CONTROL FRONT
SEAT CUSHION HEIGHT CONTROL REAR
N18/19
NO.227
PIN 1 = TERM.31
PIN 2 = TERM.30
PIN 4 = TERM.X
COMFORT SEAT LEFT
(M437)
M139
4-WAY SWITCH
SEAT BACK FORWARD CONTROL
SEAT BACKREST CONTROL
NO. 343 WITHOUT M139,M586
SEAT LUMBAR HEIGHT CONTROL
M586
NO. 337 FOR M139,M586
SEAT LUMBAR CURVE CONTROL
COMFORT SEAT RIGHT
(M438)
M340
NO. 343 WITHOUT M340, M513
NO. 337 FOR M340, M513

REAR SPOILER, TWO-TONE HORNS, WIPE- AND WASH CLEANERS, SUN ROOF, CONVERTIBLE TOP

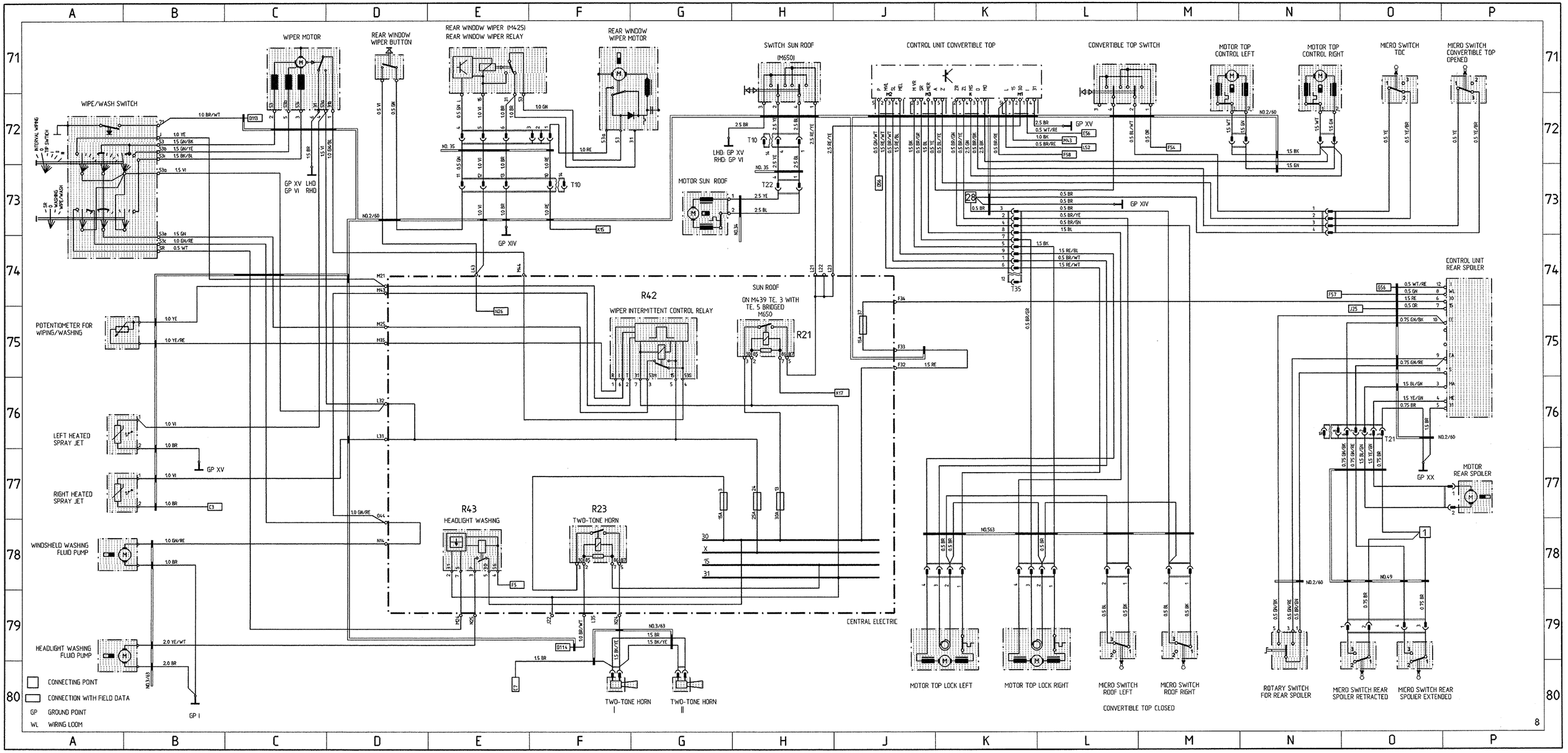

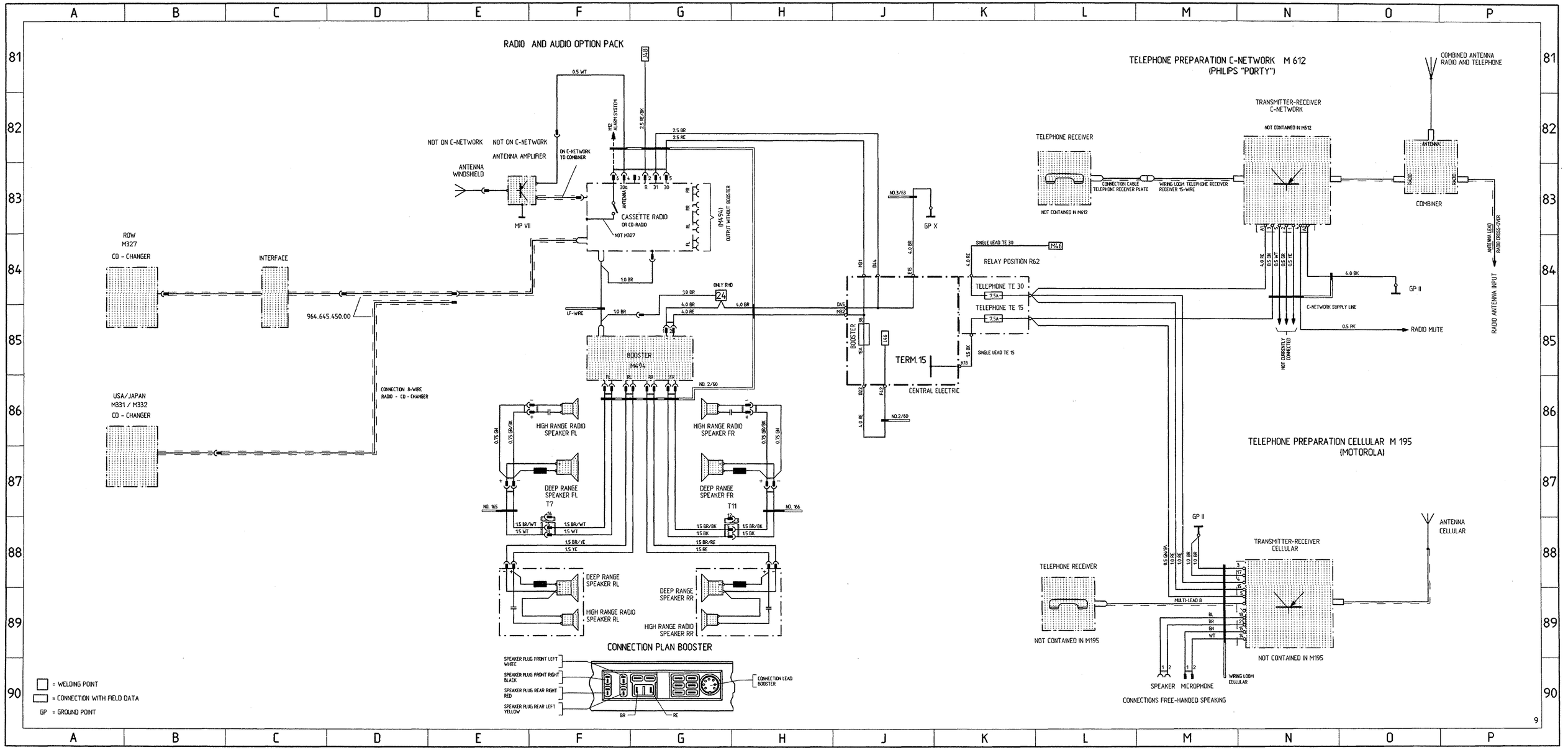
RADIO AND AUDIO OPTION PACK
TELEPHONE PREPARATION C-NETWORK M 612
(PHILIPS "PORTY")
TELEPHONE PREPARATION CELLULAR M 195
(MOTOROLA)
ROW
M327
CD - CHANGER
INTERFACE
964.645.450.00
USA/JAPAN
M331 / M332
CD - CHANGER
CONNECTION 8-WIRE
RADIO - CD - CHANGER
ANTENNA WINDSHIELD
ANTENNA AMPLIFIER
NOT ON C-NETWORK
NOT ON C-NETWORK
ON C-NETWORK
TO COMBINER
MP VII
CASSETTE RADIO
OR CD-RADIO
NOT M327
(M694)
OUTPUT WITHOUT BOOSTER
ONLY RHD
LF-WIRE
BOOSTER
M694
HIGH RANGE RADIO
SPEAKER FL
HIGH RANGE RADIO
SPEAKER FR
DEEP RANGE
SPEAKER FL
T7
DEEP RANGE
SPEAKER FR
T11
DEEP RANGE
SPEAKER RL
HIGH RANGE RADIO
SPEAKER RL
DEEP RANGE
SPEAKER RR
HIGH RANGE RADIO
SPEAKER RR
CONNECTION PLAN BOOSTER
SPEAKER PLUG FRONT LEFT
WHITE
SPEAKER PLUG FRONT RIGHT
BLACK
SPEAKER PLUG REAR RIGHT
RED
SPEAKER PLUG REAR LEFT
YELLOW
CONNECTION LEAD
BOOSTER
TERM.15
CENTRAL ELECTRIC
GP X
GP II
RELAY POSITION R62
TELEPHONE TE 30
TELEPHONE TE 15
SINGLE LEAD TE 30
SINGLE LEAD TE 15
TELEPHONE RECEIVER
NOT CONTAINED IN M612
CONNECTION CABLE
TELEPHONE RECEIVER PLATE
WIRING LOOM TELEPHONE RECEIVER
RECEIVER 15-WIRE
TRANSMITTER-RECEIVER
C-NETWORK
NOT CONTAINED IN M612
COMBINED ANTENNA
RADIO AND TELEPHONE
ANTENNA
COMBINER
C-NETWORK SUPPLY LINE
NOT CURRENTLY
CONNECTED
RADIO MUTE
ANTENNA LEAD
RADIO CROSS-OVER
RADIO ANTENNA INPUT
TELEPHONE RECEIVER
NOT CONTAINED IN M195
TRANSMITTER-RECEIVER
CELLULAR
NOT CONTAINED IN M195
ANTENNA
CELLULAR
MULTI-LEAD 8
WRING LOOM
CELLULAR
SPEAKER
MICROPHONE
CONNECTIONS FREE-HANDED SPEAKING
= WELDING POINT
= CONNECTION WITH FIELD DATA
GP = GROUND POINT

FOG LIGHT- AND REAR FOG LIGHT-WIRINGS

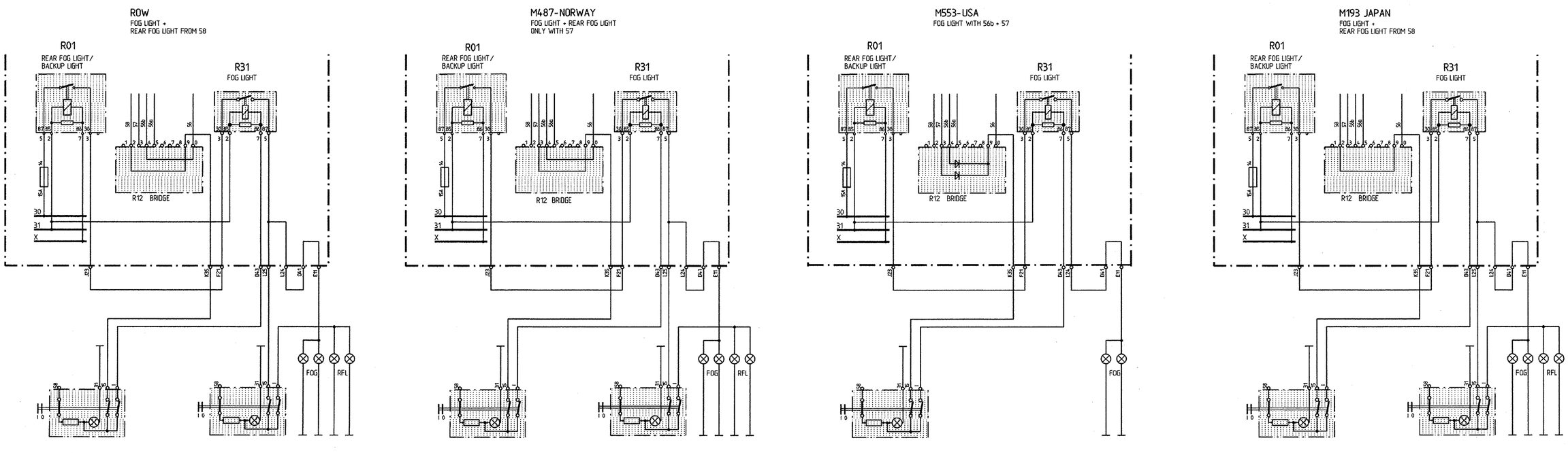

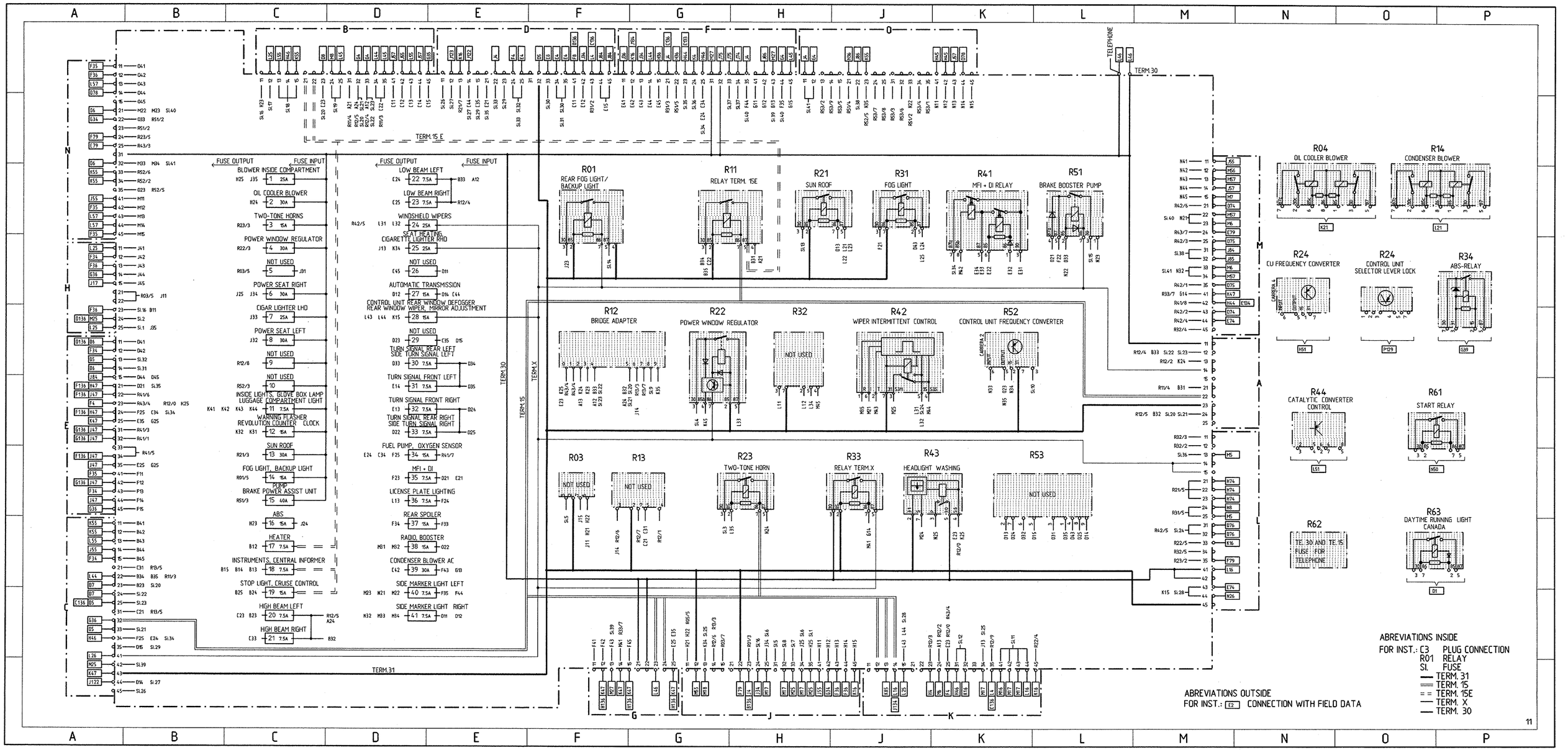
FUSE OUTPUT
FUSE INPUT
BLOWER INSIDE COMPARTMENT
OIL COOLER BLOWER
TWO-TONE HORNS
POWER WINDOW REGULATOR
NOT USED
POWER SEAT RIGHT
CIGAR LIGHTER LHD
POWER SEAT LEFT
INSIDE LIGHTS, GLOVE BOX LAMP
LUGGAGE COMPARTMENT LIGHT
WARNING FLASHER
REVOLUTION COUNTER CLOCK
SUN ROOF
FOG LIGHT, BACKUP LIGHT
BRAKE POWER ASSIST UNIT
ABS
HEATER
INSTRUMENTS, CENTRAL INFORMER
STOP LIGHT, CRUISE CONTROL
HIGH BEAM LEFT
HIGH BEAM RIGHT
LOW BEAM LEFT
LOW BEAM RIGHT
WINDSHIELD WIPERS
SEAT HEATING
CIGARETTE LIGHTER RHD
AUTOMATIC TRANSMISSION
CONTROL UNIT REAR WINDOW DEFOGGER
REAR WINDOW WIPER, MIRROR ADJUSTMENT
TURN SIGNAL REAR LEFT
SIDE TURN SIGNAL LEFT
TURN SIGNAL FRONT LEFT
TURN SIGNAL FRONT RIGHT
TURN SIGNAL REAR RIGHT
SIDE TURN SIGNAL RIGHT
FUEL PUMP, OXYGEN SENSOR
MFI + DI
LICENSE PLATE LIGHTING
REAR SPOILER
RADIO, BOOSTER
CONDENSER BLOWER AC
SIDE MARKER LIGHT LEFT
SIDE MARKER LIGHT RIGHT
TERM. 15 E
TERM. 30
TERM. X
TERM. 15
TERM. 31
TELEPHONE
R01 REAR FOG LIGHT/ BACKUP LIGHT
R11 RELAY TERM. 15E
R21 SUN ROOF
R31 FOG LIGHT
R41 MFI + DI RELAY
R51 BRAKE BOOSTER PUMP
R04 OIL COOLER BLOWER
R14 CONDENSER BLOWER
R24 CU FREQUENCY CONVERTER
R24 CONTROL UNIT SELECTOR LEVER LOCK
R34 ABS-RELAY
R12 BRIDGE ADAPTER
R22 POWER WINDOW REGULATOR
R32 NOT USED
R42 WIPER INTERMITTENT CONTROL
R52 CONTROL UNIT FREQUENCY CONVERTER
R44 CATALYTIC CONVERTER CONTROL
R61 START RELAY
R03 NOT USED
R13 NOT USED
R23 TWO-TONE HORN
R33 RELAY TERM.X
R43 HEADLIGHT WASHING
R53 NOT USED
R62 TE. 30 AND TE. 15 FUSE FOR TELEPHONE
R63 DAYTIME RUNNING LIGHT CANADA
ABREVIATIONS INSIDE
FOR INST.: C3 PLUG CONNECTION
R01 RELAY
SL FUSE
TERM. 31
TERM. 15
TERM. 15E
TERM. X
TERM. 30
ABREVIATIONS OUTSIDE
FOR INST.: E2 CONNECTION WITH FIELD DATA

CONSTRUCTION COMPONENTS

DESIGNATION, FUNCTION	POSITION IN VEHICLE LHD	POSITION IN VEHICLE RHD	NOTE	FIELD IN WIRING DIAGRAM
ABS RELAY	6cM	6cM	CENTRAL ELECTRIC	G39/40
AIR FLOW SENSOR	16bO	16bO	ON ENGINE	A43
ALARM HORN	3cL	3cL	IN WHEEL HOUSING FRONT RIGHT	J20
ANTENNA AMPLIFIER	7bL	7bQ	IN LUGGAGE COMPARTMENT	E/F83
BACKUP LIGHT SWITCH	14dN	14dN	BY TRANSMISSION RIGHT	N1
BATTERY MAIN SWITCH RS	2dN	2dN	IN LUGGAGE COMPARTMENT	H138/139
BLOWER ENGINE COMPARTMENT	16cO	16cO	ON ENGINE	H30
BLOWER FINAL STAGE	6bN	6bN	IN LUGGAGE COMPARTMENT	F30
BLOWER MOTOR LEFT	6cP	6cP	IN LUGGAGE COMPARTMENT	F30
BLOWER MOTOR RIGHT	6cM	6cM	IN LUGGAGE COMPARTMENT	G30
BOOSTER	9eM	9eM	UNDER THE SEAT RIGHT	F/G85
BRAKE BOOSTER PUMP	1dO	1dO	IN LUGGAGE COMPARTMENT	H39/40
BUZZER CONTACT	7cP	7cM	ON IGNITION LOCK	P56
CENTRAL ELECTRIC	6cM	6cM	IN LUGGAGE COMPARTMENT	—
CENTRAL INFORMER	6cP	6cP	ON STEERING COLUMN	H32,F/G/H59
CLUTCH SWITCH CRUISE CONTROL	6dP	6dN	BY CLUTCH PEDAL UNDER FLOOR PANEL	P46
CONDENSER BLOWER	2dO	2dO	IN WHEEL HOUSING FRONT LEFT	N21
CONTROL RELAY REAR WINDOW DEFOGGER	16cP	16cP	CARRIER PLATE IN ENGINE COMPARTMENT	O/P29/30
CONTROL UNIT ABS	2dM	2dM	IN LUGGAGE COMPARTMENT	A33-38
CONTROL UNIT AIRBAG	6cO	6cO	ON INTRUMENT PANEL	J114/115
CONTROL UNIT ALARM SYSTEM/CENTRAL LOCKING SYSTEM	9eM	9eM	UNDER THE SEAT RIGHT	J-M12
CONTROL UNIT AUTOMATIC TRANSMISSION	10dP	10dP	UNDER THE SEAT LEFT	C-G122
CONTROL UNIT CONVERTIBLE TOP	6cP	6cP	ON INTRUMENT PANEL	J/K71
CONTROL UNIT CRUISE CONTROL	9eN	9eN	UNDER THE SEAT RIGHT	P43/44
CONTROL UNIT INSTRUMENT LIGHT	7bQ	7bQ	IN LUGGAGE COMPARTMENT LEFT	K1
CONTROL UNIT HEATING, AIR CONDITIONING	7cO	7cN	ON INTRUMENT PANEL	B-F21
CONTROL UNIT REAR SPOILER	6cM	6cP	INSIDE FIREWALL RIGHT/LEFT	P74-76
CONTROL UNIT SELECTOR LEVER LOCK	6cM	6cM	CENTRAL ELECTRIC	O/P129/130
CRASH SENSOR LEFT	4cP	4cP	IN LUGGAGE COMPARTMENT	F112/113
CRASH SENSOR RIGHT	4cM	4cM	IN LUGGAGE COMPARTMENT	G112/113
DIAGNOSIS CONNECTION	7cL	7cQ	IN PASSENGER'S FOOTWELL	G/H50
DRIVE CRUISE CONTROL	15cO	15cO	ON ENGINE	N43/44
ENGINE SPEED SENSOR	15cP	15cP	BY ENGINE LEFT	A46/47
FLASHER	7dN	7dN	IN CENTRE CONSOLE	D1
FUEL LEVEL SENSOR	5cM	5cP	IN FUEL TANK	K51
FUEL PUMP	6eM	6eP	BEHIND THE BASE	J49
FUSES ENGINE COMPARTMENT	16cP	16cP	CARRIER PLATE IN ENGINE COMPARTMENT	L28
GONG RELAY	6cP	—	BY STEERING COLUMN LEFT	P53/54
HALL SENSOR	17cO	17cO	ON DISTRIBUTOR	A46
HEADLIGHT CLEANER PUMP	3cQ	3cQ	BY WASHING FLUID RESERVOIR IN WHEEL HOUSING FL	A79/80
HEADLIGHT CLEANER RELAY	6cM	6cM	CENTRAL ELECTRIC	E78
HYDRAULIC UNIT ABS	3dP	3dP	IN LUGGAGE COMPARTMENT	C32
IDLE SPEED POSITIONER	15bN	15bN	IN ENGINE COMPARTMENT	H41
IDLE SPEED SWITCH AUTOMATIC TRANSMISSION	15bN	15bN	ON ENGINE	C50
IGNITION COIL I	15cQ	15cQ	IN ENGINE COMPARTMENT LEFT	L41
IGNITION COIL II	15cQ	15cQ	IN ENGINE COMPARTMENT LEFT	K41
IGNITION CONTROL UNIT I	15cP	15cP	IN ENGINE COMPARTMENT LEFT	K41
IGNITION CONTROL UNIT II	15cP	15cP	IN ENGINE COMPARTMENT LEFT	J41
KICK-DOWN SWITCH	6dO	6dM	BY ACCELERATOR PEDAL UNDER FLOOR PANEL	M122
KNOCK SENSOR 1	15cP	15cP	BY ENGINE LEFT	A47
KNOCK SENSOR 2	16cN	16cN	BY ENGINE TOP	A48
LATERAL ACCELERATION SENSOR ABS	7dN	7dN	IN CENTRE CONSOLE	D/E40
LATERAL ACCELERATION SENSOR AUTOMAT	7dN	7dN	IN CENTRE CONSOLE	K129
LOCKING DIFFERENTIAL VALVES LONGIT. AND TRANSVERSE	3dM	3dM	IN LUGGAGE COMPARTMENT	E31
LONGITUDINAL ACCELERATION SENSOR	7dN	7dN	IN CENTRE CONSOLE	E40
MFI + DI CONTROL UNIT	9eP	9eP	UNDER THE SEAT LEFT	B-F41
MFI + DI RELAY	6cM	6cM	CENTRAL ELECTRIC	J44
MICRO SWITCH FOR TOP CONTROL	12cL	12cL	BEHIND SIDE PANEL COVERING	P71

DESIGNATION, FUNCTION	POSITION IN VEHICLE LHD	POSITION IN VEHICLE RHD	NOTE	FIELD IN WIRING DIAGRAM
MICRO SWITCH REAR SPOLIER EXTENDED	16bP	16bP	ON TAILGATE	O79
MICRO SWITCH REAR SPOILER RETRACTED	16bP	16bP	ON TAILGATE	O79
MICRO SWITCH ROOF LEFT	9aO	9aO	AT CONVERTIBLE TOP FRAME	L79
MICRO SWITCH ROOF RIGHT	9aN	9aN	AT CONVERTIBLE TOP FRAME	M79
MICRO SWITCH TDC	12cL	12cL	BEHIND SIDE PANEL COVERING	O71
MOTOR TOP CONTROL LEFT	15cO	15cO	BEHIND REAR SEAT	M/N71
MOTOR TOP CONTROL RIGHT	15cN	15cN	BEHIND REAR SEAT	N71
MOTOR TOP LOCK LEFT	9aO	9aO	AT CONVERTIBLE TOP FRAME	J/K79
MOTOR TOP LOCK RIGHT	9aN	9aN	AT CONVERTIBLE TOP FRAME	K/L79
MOTOR SUN ROOF	12aN	12aN	IN ROOF	G73
NTC HEATER FAN	16cP	16cP	IN ENGINE COMPARTMENT	G30
OIL COOLER BLOWER	2dL	2dL	IN WHEEL HOUSING FRONT RIGHT	O21
OIL LEVEL GAGE	12cK	12cK	IN WHEEL HOUSING REAR RIGHT	E51/52
OIL PRESSURE SENSOR/SWITCH	14cN	14cN	ON ENGINE	A54
OIL TEMPERATURE SENSOR COOLING FAN	2dL	2dL	IN WHEEL HOUSING FRONT RIGHT	J21
OIL TEMPERATURE SENSOR FOR INSTRUMENT	14cN	14cN	ON ENGINE	A53
OUTSIDE TEMP. SENSOR	8bK	8bR	IN OUTSIDE MIRROW	A60
PRESSURE SENSOR	10eP	10eP	UNDER THE SEAT LEFT	A42
PRESSURE SWITCH AIR CONDITIONING SYSTEM	6bO	6bO	IN LUGGAGE COMPARTMENT	D/E30
PRESSURE WARNING SWITCH	1dO	1dO	IN LUGGAGE COMPARTMENT	F/G31/32
REAR FOG LIGHT CUTOUT RELAY	17dN	17dN	BEHIND REAR PANEL	H108
REAR WINDOW WIPER RELAY	15bO	15bO	ON REAR WINDOW WIPER MOTOR	E71
RELAY AC COMPRESSOR	16cP	16cP	CARRIER PLATE IN ENGINE COMPARTMENT	L30
RELAY BACKUP LIGHT	7bQ	7bQ	IN LUGGAGE COMPARTMENT LEFT	L122
RELAY BLOWER ENGINE COMPARTMENT	16cP	16cP	CARRIER PLATE IN ENGINE COMPARTMENT	J/K30
RELAY BRAKE BOOSTER PUMP	6cM	6cM	CENTRAL ELECTRIC	H34/35
RELAY CONDENSER BLOWER	6cM	6cM	CENTRAL ELECTRIC	L21
RELAY FREQUENCY TRANSFORMER	6cM	6cM	CENTRAL ELECTRIC	K56/H51
RELAY FRONT FOG LAMP	6cM	6cM	CENTRAL ELECTRIC	J7
RELAY DAYTIME RUNNING LIGHT CANADA	6cM	6cM	CENTRAL ELECTRIC	D1
RELAY OIL COOLER BLOWER	6cM	6cM	CENTRAL ELECTRIC	K21
RELAY POWER WINDOW REGULATOR	6cM	6cM	CENTRAL ELECTRIC	K18/19
RELAY REAR FOG LIGHT- BACKUP LIGHT	6cM	6cM	CENTRAL ELECTRIC	J/K7
RELAY STARTER AUTOMATIC TRANSMISSION	6cM	6cM	CENTRAL ELECTRIC	N50
RELAY SUN ROOF	6cM	6cM	CENTRAL ELECTRIC	H75
RELAY TERM.X	6cM	6cM	CENTRAL ELECTRIC	K44
RELAY TERM.15 E	6cM	6cM	CENTRAL ELECTRIC	K/L44
RELAY THERMO SWITCH CATALYTIC CONVERTER	6cM	6cM	CENTRAL ELECTRIC	L/M51
RELAY TWO-TONE HORN	6cM	6cM	CENTRAL ELECTRIC	F78
RESISTOR BLOWER	16dP	16dP	IN ENGINE COMPARTMENT	J30
RESISTOR FOR BLOWER CONDENSER	2dQ	2dQ	IN WHEEL HOUSING FRONT LEFT	M21
RESISTOR OIL COOLER BLOWER	2dL	2dL	IN WHEEL HOUSING FRONT RIGHT	M21
SHIFT VALVE RESONANCE FLAP	15bN	15bN	ON ENGINE	G41
STARTER	14dN	14dN	BY CLUTCH HOUSING RIGHT	P49/50
STOP LIGHT SWITCH	6dP	6dM	AT THE BRAKE PEDAL BELOW THE FLOOR PANEL	N9
SWITCH LIFTING	12dO	12dO	ON GEARBOX	D-F129
TANK VENTING VALVE	15cN	15cN	BY ENGINE TOP	H41
TEMPERATURE MOTOR	15cP	15cP	BY ENGINE LEFT	A45
THROTTLE VALVE POTENTIOMETER, AUTOM. TRANSMISSION	15bN	15bN	ON THROTTLE VALVE ASSEMBLY	C50
THROTTLE VALVE SWITCH, MANUAL TRANSMISSION	15bN	15bN	ON THROTTLE VALVE ASSEMBLY	A44/45
TWO-TONE HORN I	3cL	3cL	IN WHEEL HOUSING FRONT RIGHT	F80
TWO-TONE HORN II	3cL	3cL	IN WHEEL HOUSING FRONT RIGHT	G80
VARIANT IDENTIFIKATION SWITCH	9eP	9eP	UNDER THE SEAT LEFT	G43
V-BELT CONTROL	17dO	17dO	ON ENGINE	A55/56
WARNING BUZZER	7cP	7cP	ON INTRUMENT PANEL	K60
WINDSHIELD WASHING FLUID PUMP	3cQ	3cQ	BY WASHING FLUID RESERVOIR IN WHEEL HOUSING FL	A78
WINDSHIELD WASHING FLUID PUMP RS	4cM	4cQ	IN LUGGAGE COMPARTMENT	A78
WIPER INTERMITTENT CONTROL RELAY	6cM	6cM	CENTRAL ELECTRIC	F/G75

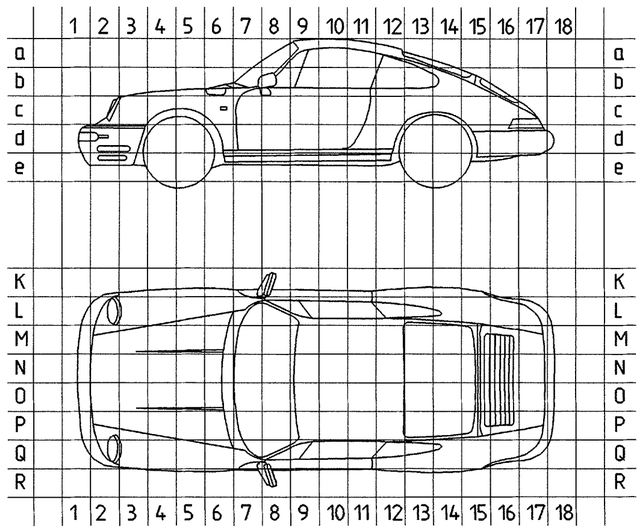

12

PLUG CONNECTIONS, GROUND POINTS, ABBREVIATIONS

PLUG CONNECTIONS

CODE	NUMBER OF PINS	DESIGNATION, FUNCTION	POSITION IN VEHICLE LHD	POSITION IN VEHICLE RHD	NOTE	FIELD
T1	6	IGNITION LOCK	6cP	6cM	BY STEERING COLUMN LEFT	L48
T2	10	ABS	6cL	6cL	IN LUGGAGE COMPARTMENT RIGHT	C36/37, K122, 015
T5	14	HEATER, AIR CONDITIONER	6cM	6cM	UNDER INSTRUMENT PANEL RIGHT	G25/26
T6	6	AIRBAG	7dN	7dN	IN CENTRE CONSOLE	F/G117
T7	14	DOOR DRIVER'S SIDE	6cQ	6cL	UNDER INSTRUMENT PANEL LEFT	F88,E/F17
T8	10	DOOR DRIVER'S SIDE	6cQ	6cL	UNDER INSTRUMENT PANEL LEFT	C16
T9	2	AIRBAG	7dN	7dN	IN CENTRE CONSOLE	G117
T10	14	REAR WINDOW SHELF	12cL	12cL	BEHIND SIDE PANEL COVERING	09,N13,027,E/F73,H72
T11	12	DOOR PASSENGER'S SIDE	6cL	6cQ	UNDER INSTRUMENT PANEL RIGHT	E14,H88
T12	10	DOOR PASSENGER'S SIDE	6cL	6cQ	UNDER INSTRUMENT PANEL RIGHT	B59,C14
T15	6	MFI + DI	9eP	9eP	UNDER THE SEAT LEFT	L43,B53
T16	14	MFI + DI	9eP	9eP	UNDER THE SEAT LEFT	F45/46,B55
T18	2	LICENSE PLATE LIGHTS	17dL	17dL	TAIL LIGHTS RIGHT	D4
T19	2	OIL LEVEL GAGE	15cM	15cM	IN ENGINE COMPARTMENT RIGHT	E52
T20	3	GLOVE BOX LAMP AIRBAG	6cL	—	UNDER INSTRUMENT PANEL RIGHT	017
T21	10	TAILGATE	15cL	15cL	IN ENGINE COMPARTMENT RIGHT	N76,014,010
T22	4	INSIDE LIGHTS, SUN ROOF	15bM	15bM	BELOW THE PARCEL TRAY	H73,013
T23	2	INSIDE LIGHTS CONVERTIBLE, TARGA	6cQ	6cQ	UNDER INSTRUMENT PANEL LEFT	013
T24	2	SIDE TURN SIGNAL LEFT	7bQ	7bQ	IN LUGGAGE COMPARTMENT ON SIDE MEMBER LEFT	D/E9
T25	2	SIDE TURN SIGNAL RIGHT	7bL	7bL	IN LUGGAGE COMPARTMENT ON SIDE MEMBER RIGHT	C2
T27	2	LUGGAGE COMPARTMENT LIGHT	7bL	7bL	IN LUGGAGE COMPARTMENT ON SIDE MEMBER RIGHT	D16
T30	14	NO. 16 MOTOR	16cP	16cP	CARRIER PLATE IN ENGINE COMPARTMENT	N/03,J27/28,048/49,B54
T31	12	MOTOR, MFI+DI	16cP	16cP	CARRIER PLATE IN ENGINE COMPARTMENT	D/E47,B53
T34	14	HEATER, AIR CONDITIONER	6cM	6cM	IN LUGGAGE COMPARTMENT RIGHT	G23/24
T35	12	CONVERTIBLE TOP	12cL	12cL	BEHIND SIDE PANEL COVERING	K73/74
T36	6	REAR WINDOW	15bM	15bM	BELOW THE PARCEL TRAY	09,028
T38	7	NO.4, FRONT LIGHTS	3cL	3cL	IN WHEEL HOUSING FRONT RIGHT	C5/6
T39	5	NO.4, FRONT LIGHTS	3cL	3cL	IN WHEEL HOUSING FRONT RIGHT	C6/7
T40	30	AUTOMATIC TRANSMISSION	9eP	9eP	UNDER THE SEAT LEFT	H124/125
T41	12	AUTOMATIC TRANSMISSION	9eP	9eP	UNDER THE SEAT LEFT	C/050,E127
T42	6	REAR PACKAGE TRAY	9eM	9eM	UNDER THE SEAT RIGHT	H16

GROUND POINTS

CODE	NOTE	POSITION IN VEHICLE LHD
GP I	LUGGAGE COMPARTMENT, WHEEL HOUSING LEFT	2cP
GP II	LUGGAGE COMPARTMENT, WHEEL HOUSING RIGHT	2cM
GP III	ON FIREWALL	—
GP IV	GROUND FOR POWER CONSUMERS, UNDER SEAT LEFT	11eP
GP V	ELECTRONICS, UNDER SEAT LEFT	10eP
GP VI	CENTRAL ELECTRIC, ON SIDE MEMBER RIGHT	6bL
GP VII	ANTENNA AMPLIFIER ON SIDE MEMBER LEFT	7bL
GP VIII	INSIDE LIGHT CONVERTIBLE, ROOF CENTRE FRONT	9aN
GP IX	INSIDE LIGHT, ROOF RIGHT	11aL
GP IX	INSIDE LIGHT, ROOF LEFT	11aP
GP X	BATTERY, LUGGAGE COMPARTMENT LEFT	3eP
GP XI	GROUND STRAP (STARTER, TRANSMISSION, ENGINE, BODY)	14cM
GP XII	ENGINE COMPARTMENT REAR LEFT	15cQ
GP XIII	MOTOR LEFT	15cQ
GP XIV	ENGINE COMPARTMENT REAR RIGHT	15cL
GP XV	INSTRUMENTS, SIDE MEMBER LEFT	7bQ
GP XVI	COMBINED LEAD REAR LEFT	13dP
GP XVII	COMBINED LEAD REAR RIGHT	12dM
GP XVIII	COMBINED LEAD FRONT RIGHT	4cM
GP XIX	COMBINED LEAD FRONT LEFT	4cP
GP XX	SEAT CROSS MEMBER, UNDER SEAT RIGHT	8eL
GP XXI	GROUND FOR POWER CONSUMERS, CONNECTION CRANK CASE	16cNO
GP XXII	ELECTRONICS, CONNECTION CRANK CASE	16cNO

ABBREVIATIONS

CODE	MEANING	CODE	MEANING
ABS	ANTILOCK BRAKING SYSTEM	NO	NUMBER
ADL	ADDITIONAL DRIVING LIGHTS	NTC	NEGATIVE TEMPERATURE COEFFICIENT
AC	AIR CONDITIONING SYSTEM	OP	OPEN
CE	CENTRAL ELECTRIC	PIN	PIN
CL	CLOSE	PL	PLUG
CLS	CENTRAL LOCKING SYSTEM	POT	POTENTIOMETER
CP	CONNECTING POINT	PSD	PORSCHE LIMITED SLIP DIFFERENTIAL
CU	CONTROL UNIT	RA	REAR AXLE
DEF	DEFROST	RDK	TIRE PRESSURE CONTROL
D I	ELECTRIC IGNITION SYSTEM WITH KNOCK CONTROL	RFL	REAR FOG LIGHT
DP	DISCONNECTING POINT	RHD	RIGHT-HAND DRIVE
ESO	ENGINE-SPEED SENSOR OUTPUT	RL	REAR LEFT
FA	FRONT AXLE	ROW	REST OF WORLD
FCU	FREQUENCY CONVERTER UNIT	RR	REAR RIGHT
FL	FRONT LEFT	SA	SAUDI ARABIA
FOG	FOG LIGHT	SCS	COMBINED STEERING COLUMN SWITCH
FR	FRONT RIGHT	SS	SPEED SENSOR
GP	GROUND POINT	TE	TERMINAL
HCS	HEADLIGHT CLEANING SYSTEM	USA	USA
HF	HIGH FREQUENCY	WL	WIRING LOOM
IC	INSTRUMENT CLUSTER	WP	WELD POINT
LED	LIGHT-EMITTING DIODE	WW	WORLDWIDE
LF	LOW FREQUENCY		
LHD	LEFT-HAND DRIVE		
MFI + DI	DIGITAL ENGINE ELECTRONICS		

M - NUMBERS

M 139	ADJUSTABLE SEAT HEATING, LEFT SEAT
M 193	JAPAN VERSION
M 215	SAUDI-ARABIA VERSION
M 249	AUTOMATIC TRANSMISSION
M 340	ADJUSTABLE SEAT HEATING, RIGHT SEAT
M 383	SPORT SEAT LEFT ELECTRIC HEIGHT ADJUSTMENT
M 387	SPORT SEAT RIGHT ELECTRIC HEIGHT ADJUSTMENT
M 425	REAR WINDOW WIPER
M 437	COMFORT SEAT LEFT
M 438	COMFORT SEAT RIGHT
M 439	ELECTRIC CONVERTIBLE TOP
M 454	CRUISE CONTROL
M 513	LUMBAR SUPPORT SEAT RIGHT
M 553	USA - CANADA VERSION
M 562	AIRBAG
M 573	AIR CONDITIONING SYSTEM
M 576	WITHOUT REAR FOG LIGHT
M 586	LUMBAR SUPPORT SEAT LEFT
M 602	HIGH MOUNTED STOP LIGHT
M 650	SUN ROOF
M 659	ON-BOARD COMPUTER

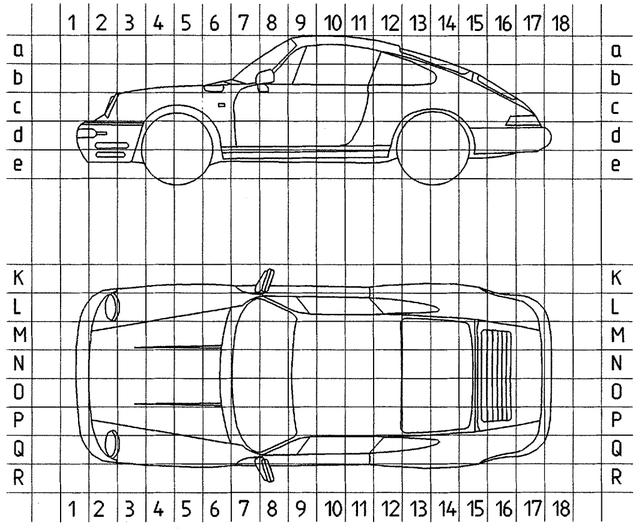

13

911 Carrera 2/4 MODEL 93 SHEET 14

ADDITIONAL WIRING DIAGRAM TRAILER COUPLING

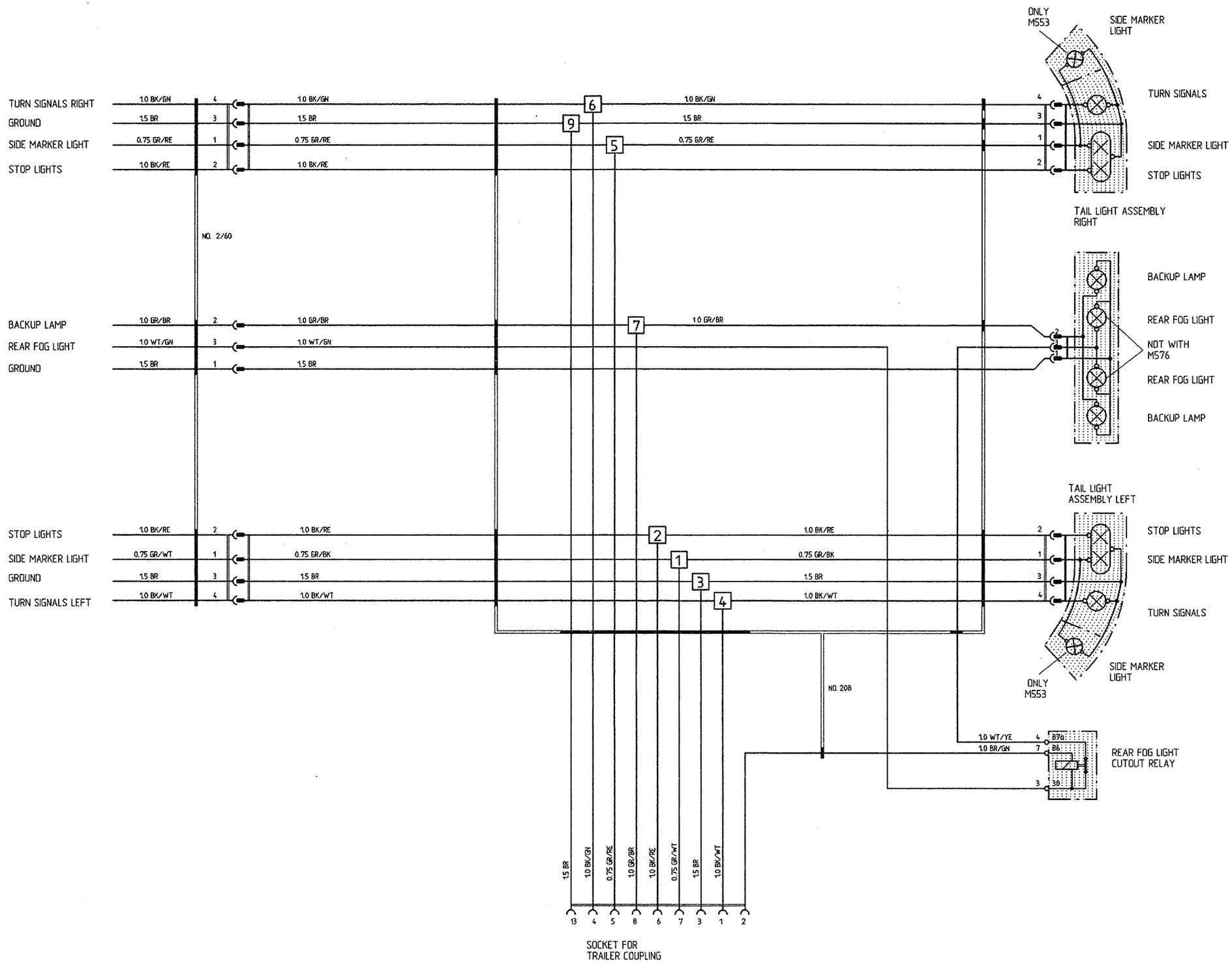

FLASHER
SEE 97-151

INDICATOR LIGHTS
SEE 97-165

AIRBAG

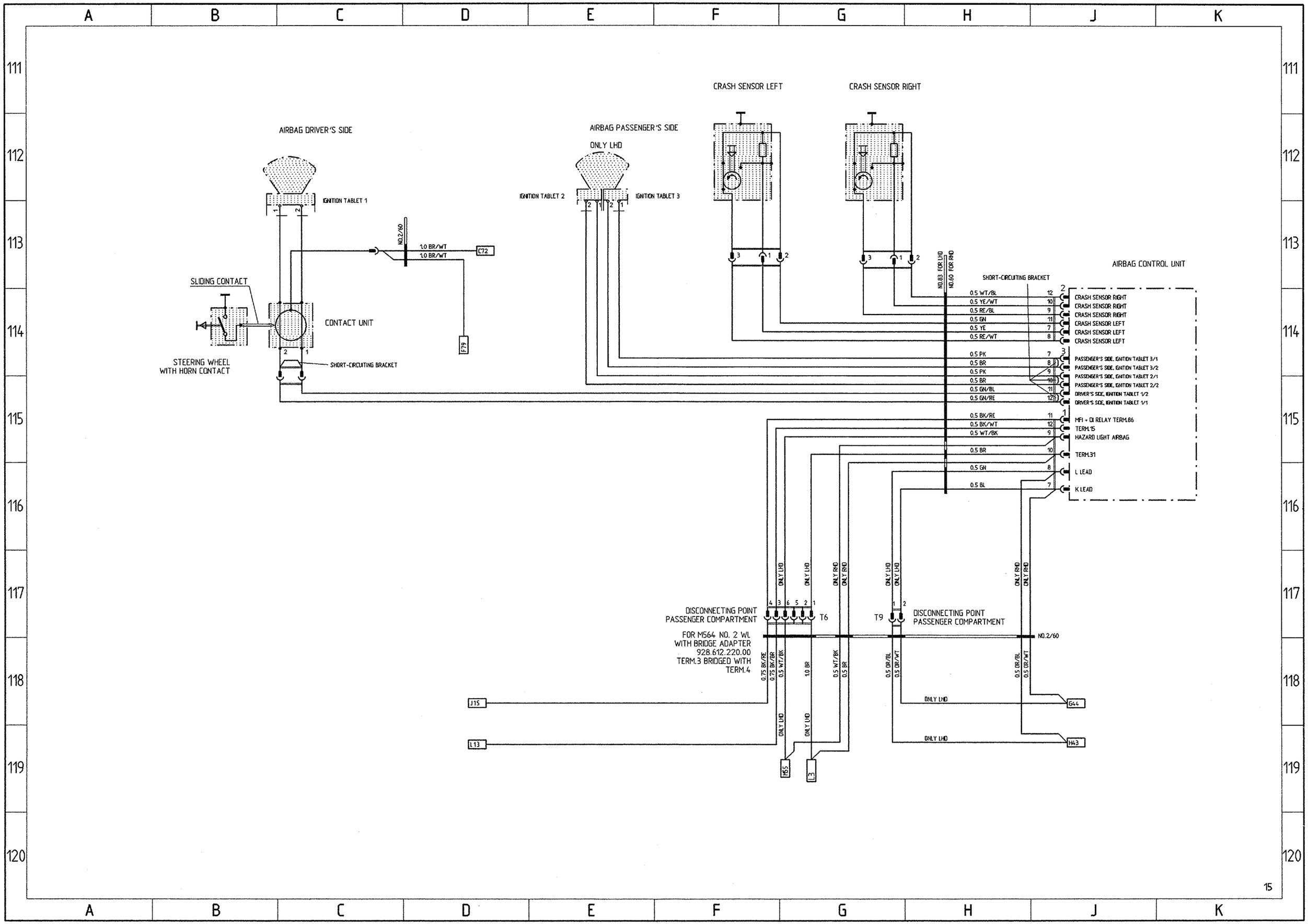
AIRBAG DRIVER'S SIDE
IGNITION TABLET 1
SLIDING CONTACT
CONTACT UNIT
STEERING WHEEL WITH HORN CONTACT
SHORT-CIRCUITING BRACKET
NO.2/60
1.0 BR/WT
1.0 BR/WT
C72
F79
AIRBAG PASSENGER'S SIDE
ONLY LHD
IGNITION TABLET 2
IGNITION TABLET 3
CRASH SENSOR LEFT
CRASH SENSOR RIGHT
NO.83 FOR LHD
NO.60 FOR RHD
SHORT-CIRCUITING BRACKET
AIRBAG CONTROL UNIT
0.5 WT/BL
0.5 YE/WT
0.5 RE/BL
0.5 GN
0.5 YE
0.5 RE/WT
CRASH SENSOR RIGHT
CRASH SENSOR RIGHT
CRASH SENSOR RIGHT
CRASH SENSOR LEFT
CRASH SENSOR LEFT
CRASH SENSOR LEFT
0.5 PK
0.5 BR
0.5 PK
0.5 BR
0.5 GN/BL
0.5 GN/RE
PASSENGER'S SIDE, IGNITION TABLET 3/1
PASSENGER'S SIDE, IGNITION TABLET 3/2
PASSENGER'S SIDE, IGNITION TABLET 2/1
PASSENGER'S SIDE, IGNITION TABLET 2/2
DRIVER'S SIDE, IGNITION TABLET 1/2
DRIVER'S SIDE, IGNITION TABLET 1/1
0.5 BK/RE
0.5 BK/WT
0.5 WT/BK
0.5 BR
0.5 GN
0.5 BL
MFI + DI RELAY TERM.86
TERM.15
HAZARD LIGHT AIRBAG
TERM.31
L LEAD
K LEAD
DISCONNECTING POINT PASSENGER COMPARTMENT
FOR M564 NO. 2 WL
WITH BRIDGE ADAPTER
928.612.220.00
TERM.3 BRIDGED WITH
TERM.4
T6
T9
DISCONNECTING POINT PASSENGER COMPARTMENT
NO.2/60
0.75 BK/RE
0.75 BK/BR
0.5 WT/BK
1.0 BR
0.5 WT/BK
0.5 BR
0.5 OR/BL
0.5 OR/WT
0.5 OR/BL
0.5 OR/WT
ONLY LHD
ONLY RHD
J15
L13
G44
H43
M55
L3
15

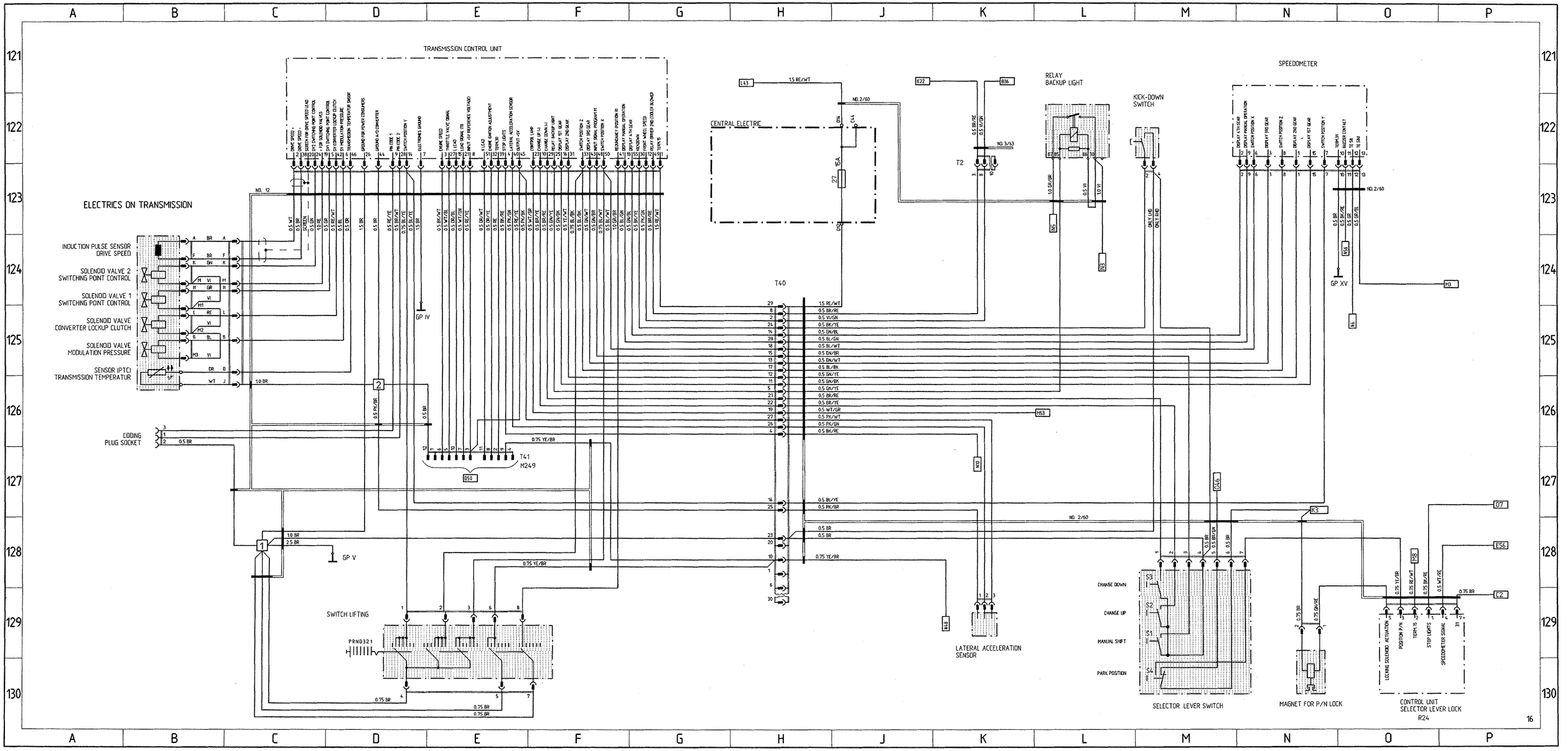
TRANSMISSION CONTROL UNIT
ELECTRICS ON TRANSMISSION
INDUCTION PULSE SENSOR DRIVE SPEED
SOLENOID VALVE 2 SWITCHING POINT CONTROL
SOLENOID VALVE 1 SWITCHING POINT CONTROL
SOLENOID VALVE CONVERTER LOCKUP CLUTCH
SOLENOID VALVE MODULATION PRESSURE
SENSOR (PTC) TRANSMISSION TEMPERATUR
CODING PLUG SOCKET
SWITCH LIFTING
PRND321
CENTRAL ELECTRIC
RELAY BACKUP LIGHT
KICK-DOWN SWITCH
SPEEDOMETER
T40
T41
M249
GP IV
GP V
GP XV
LATERAL ACCELERATION SENSOR
CHANGE DOWN
CHANGE UP
MANUAL SHIFT
PARK POSITION
SELECTOR LEVER SWITCH
MAGNET FOR P/N LOCK
CONTROL UNIT SELECTOR LEVER LOCK R24

REAR FOG LIGHT

R01

REAR FOG LIGHT/
BACKUP LIGHT

R31

FOG LIGHT

ROW

JAPAN

R12 BRIDGE

RFL

REAR FOG LIGHT SWITCH

BATTERY MAIN SWITCH
MFI + DI

OTHER CIRCUITS
SEE SHEET 5

CENTRAL ELECTRIC

R41

MFI + DI RELAY

7,5A

15A

NO.2/60

K14

15E

15

X

30

31

NO.22

35.0 BK

GP VI

1.5 RE

4.0 RE

A33

NO.3/63

PLUG Z

BATTERY
MAIN SWITCH
(EMERGENCY-OFF-SWITCH)

GP X

35 BK

BATTERY